OPERATION AND SERVICE MANUAL

8569B
SPECTRUM ANALYZER

0.01 — 115 GHz

OPTION 001 / 002

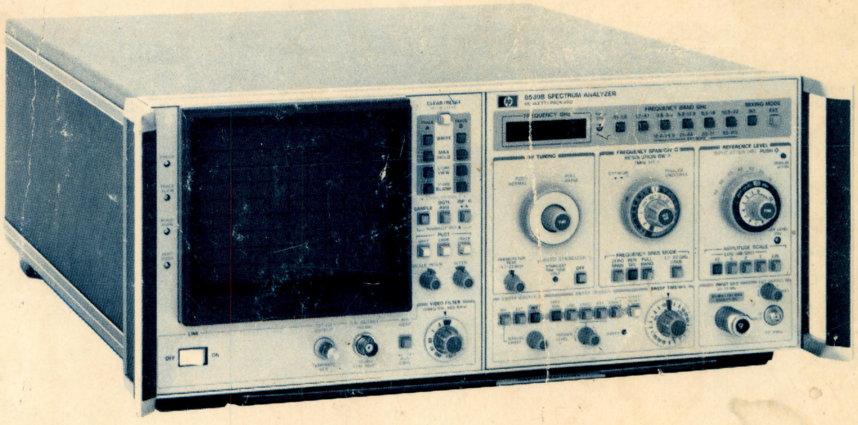

volume 3 REPLACEABLE PARTS
MANUAL BACKDATING CHANGES
SERVICE

HEWLETT PACKARD

CERTIFICATION

Hewlett-Packard Company certifies that this product met its published specifications at the time of shipment from the factory. Hewlett-Packard further certifies that its calibration measurements are traceable to the United States National Bureau of Standards, to the extent allowed by the Bureau's calibration facility, and to the calibration facilities of other International Standards Organization members.

WARRANTY

This Hewlett-Packard instrument product is warranted against defects in material and workmanship for a period of one year from date of shipment. During the warranty period, Hewlett-Packard Company will, at its option, either repair or replace products which prove to be defective.

For warranty service or repair, this product must be returned to a service facility designated by HP. Buyer shall prepay shipping charges to HP and HP shall pay shipping charges to return the product to Buyer. However, Buyer shall pay all shipping charges, duties, and taxes for products returned to HP from another country.

HP warrants that its software and firmware designated by HP for use with an instrument will execute its programming instructions when properly installed on that instrument. HP does not warrant that the operation of the instrument, or software, or firmware will be uninterrupted or error free.

LIMITATION OF WARRANTY

The foregoing warranty shall not apply to defects resulting from improper or inadequate maintenance by Buyer, Buyer-supplied software or interfacing, unauthorized modification or misuse, operation outside of the environmental specifications for the product, or improper site preparation or maintenance.

NO OTHER WARRANTY IS EXPRESSED OR IMPLIED. HP SPECIFICALLY DISCLAIMS THE IMPLIED WARRANTIES OF MERCHANTABILITY AND FITNESS FOR A PARTICULAR PURPOSE.

EXCLUSIVE REMEDIES

THE REMEDIES PROVIDED HEREIN ARE BUYER'S SOLE AND EXCLUSIVE REMEDIES. HP SHALL NOT BE LIABLE FOR ANY DIRECT, INDIRECT, SPECIAL, INCIDENTAL, OR CONSEQUENTIAL DAMAGES, WHETHER BASED ON CONTRACT, TORT, OR ANY OTHER LEGAL THEORY.

ASSISTANCE

Product maintenance agreements and other customer assistance agreements are available for Hewlett-Packard products.

For any assistance, contact your nearest Hewlett-Packard Sales and Service Office. Addresses are provided at the back of this manual.

HEWLETT PACKARD

OPERATION AND SERVICE MANUAL

8569B
SPECTRUM ANALYZER
Includes Options 001 and 002

SERIAL NUMBERS

This manual applies directly to HP Model 8569B Spectrum Analyzers having serial prefix number 2244A.

For additional important information about serial numbers see INSTRUMENTS COVERED BY MANUAL in Section I.

volume 3 REPLACEABLE PARTS
MANUAL BACKDATING CHANGES
SERVICE

Copyright © 1982, HEWLETT-PACKARD COMPANY
1424 FOUNTAIN GROVE PARKWAY, SANTA ROSA, CALIFORNIA, 95404, U.S.A.

MANUAL PART NO. 08569-90032

Printed: December 1982

CONTENTS

Section Page

VI REPLACEABLE PARTS 6-1
6-1. Introduction. 6-1
6-3. Replaceable Parts List 6-1
6-6. Ordering Information. 6-1
VII MANUAL BACKDATING CHANGES. 7-1
7-1. Introduction. 7-1
7-4. Manual Change Instructions. 7-1
7-5. Video Offset Adjustment 7-4
VIII SERVICE 8-1
8-1. Introduction. 8-1
8-3. Schematic Arrangement 8-1
8-5. Troubleshooting 8-1
8-9. Recommended Test Equipment 8-1
8-11. Repair. 8-25
8-16. Removal of A1 Front Panel Display Assembly 8-25
8-17. Removal of A2 Front Panel Control Assembly 8-25
8-18. Disassembly of A2 Front Panel Control Assembly Rotary Switches 8-25
8-19. Removal of Front Dress Panel and Sub-Front Panel 8-25
8-20. Disassembly of RESOLUTION BW Switch 8-26
8-21. Disassembly of FREQUENCY SPAN/DIV Switch. 8-26
8-22. Disassembly of REF LEVEL Switch. 8-30
8-23. Disassembly of INPUT ATTEN Switch. 8-30
8-24. Disassembly of SWEEP TIME/DIV Switch. 8-30
8-25. Assembly of SWEEP TIME/DIV Switch. 8-31
8-26. Assembly of FREQUENCY SPAN/DIV and RESOLUTION BW Switches 8-31
8-27. Assembly of REF LEVEL and INPUT ATTEN Switches 8-33
8-28. Installation of Sub-Front Panel and Front Dress Panel. 8-34

LIST OF ILLUSTRATIONS

Figure Page

6-1. Input 50Ω Connector J1, Exploded View 6-107
7-1. Video Offset Adjustment Test Setup. 7-4
7-2. Video Offset Adjustment Locations 7-4
7-3. A8 Microprocessor Assembly, Component Locations. 7-7
7-4. P/O A8 Microprocessor Assembly, Schematic Diagram 7-8
7-5. A21 Video—100 Hz Assembly, Component Locations
7-6. A21 Video Assembly (Option 002), Component Locations 7-10
7-7. P/O A21 Video—100 Hz Assembly, Schematic Diagram 7-11
8-1. Graphic Symbols Used on Schematic and Block Diagrams. 8-6
8-2. Schematic Symbols for Digital Integrated Circuits and Signature Analysis Troubleshooting Instructions 8-9
8-3. A2 Front Panel Control Assembly, Rear View 8-27
8-4. Factory Preset Shaft Assemblies. 8-28
8-5. Switch Assemblies, Front View 8-29
8-6. Overall Block Diagram 8-37
8-7. Display Refresh Waveforms 8-43
8-8. Digital Storage Section, Block Diagram 8-43
8-9. A1A1 Display Switch Assembly, Component Locations 8-46
8-10. A3 Display Adjust Assembly, Component Locations 8-48
8-11. A1 Front Panel Display Assembly and A3 Display Adjust Assembly, Schematic Diagram 8-49
8-12. A2A1 Front Switch Assembly, A2A2 Frequency Display Assembly, and A2A3A1 Tuning Interconnect, Component Locations 8-51
8-13. A2 Front Panel Control Assembly, Schematic Diagram 8-51

LIST OF ILLUSTRATIONS (Cont'd)

Figure	Page
8-14. A4 Z Axis Signature Analysis and Troubleshooting Diagram	8-59
8-15. A4 Z Axis Assembly, Component Locations	8-60
8-16. A4 Z Axis Assembly, Schematic Diagram	8-61
8-17. A5 X-Y Amplifier Assembly, Component Locations	8-67
8-18. A5 X-Y Amplifier Assembly, Schematic Diagram	8-69
8-19. A6 High Voltage Power Supply Assembly, Component Locations	8-74
8-20. A6 High Voltage Power Supply Assembly, Schematic Diagram	8-75
8-21. A7 Input/Output Signature Analysis and Troubleshooting Diagram	8-83
8-22. A7 Input/Output Assembly, Component Locations	8-85
8-23. A7 Input/Output Assembly, Schematic Diagram	8-85
8-24. Stroke Generator Timing Diagram	8-93
8-25. Digital Display Timing Diagram	8-96
8-26. Mixed Analog/Digital Display Timing Diagram	8-97
8-27. A8 Microprocessor Signature Analysis and Troubleshooting Diagram	8-99
8-28. A8 Microprocessor Assembly, Component Locations	8-104
8-29. A8 Microprocessor Assembly, Schematic Diagram	8-105
8-30. A9 Data Converter Signature Analysis and Troubleshooting Diagram	8-113
8-31. A9 Data Converter Assembly, Component Locations	8-115
8-32. A9 Data Converter Assembly, Schematic Diagram	8-117
8-33. A10 Display Motherboard Assembly, Component Locations	8-120
8-34. A10 Display Motherboard Assembly, Schematic Diagram	8-121
8-35. Measurement Timing Diagram for A11 DVM Digital Assembly and A12 DVM Analog Assembly	8-127
8-36. A11 DVM Digital Assembly, Component Locations	8-128
8-37. A11 DVM Digital Assembly, Schematic Diagram	8-129
8-38. DVM Analog Assembly, Simplified Block Diagram	8-134
8-39. DVM Analog Assembly, Simplified Timing Diagram	8-134
8-40. A12 DVM Analog Assembly, Component Locations	8-135
8-41. A12 DVM Analog Assembly, Schematic Diagram	8-137
8-42. A13 Relay Driver Assembly, Component Locations	8-141
8-43. A13 Relay Driver Assembly, Schematic Diagram	8-141
8-44. Control Generator Timing Diagram	8-145
8-45. Tuning Stabilizer System, Simplified Block Diagram	8-149
8-46. A14 Tuning Stabilizer Control Assembly, Component Locations	8-150
8-47. A14 Tuning Stabilizer Control Assembly, Schematic Diagram	8-151
8-48. A15 Sweep Attenuator Assembly, Component Locations	8-156
8-49. A15 Sweep Attenuator Assembly, Schematic Diagram	8-157
8-50. Simplified Circuit for Sweep Generator Current Source	8-160
8-51. Simplified Sweep Generator in FREE RUN or AUTO	8-161
8-52. Manual Sweep, Simplified Schematic Diagram	8-162
8-53. Auto Sweep Time Current Limit, Simplified Schematic Diagram	8-163
8-54. A16 Sweep Generator Assembly, Component Locations	8-165
8-55. A16 Sweep Generator Assembly, Schematic Diagram	8-167
8-56. A17 Frequency Control Assembly, Component Locations	8-173
8-57. A17 Frequency Control Assembly, Schematic Diagram	8-175
8-58. A18 Full Multiband Assembly, Timing Diagram	8-178
8-59. A18 Full Multiband Assembly, Component Locations	8-182
8-60. A18 Full Multiband Assembly, Schematic Diagram	8-183
8-61. A19 YIG Driver Assembly, Component Locations	8-189
8-62. A19 YIG Driver Assembly, Schematic Diagram	8-189
8-63. A20 Bias Assembly, Component Locations	8-193
8-64. A20 Bias Assembly, Schematic Diagram	8-195
8-65. Amplitude Scale Control Circuits	8-200
8-66. A21 Video-100 Hz Assembly, Component Locations	8-203
8-67. A21 Video–100 Hz Assembly (Option 002), Component Locations	8-204

NOISE is HIGH VOLTAGE PROBLEM

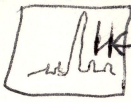

35KHz SPACING NOISE

CHECK 50μf CAPS ON HV BOARD ONE WILL BE BAD!!

LIST OF ILLUSTRATIONS (Cont'd)

Figure	Page
8-68. A21 Video—100 Hz Assembly, Schematic Diagram	8-205
8-69. Simplified Log Amplifier Stage	8-207
8-70. A22 Log Amplifier Assembly, Component Locations	8-210
8-71. A22 Log Amplifier Assembly, Schematic Diagram	8-211
8-72. Crystal Pole, Simplified Schematic	8-218
8-73. First LC Pole, Simplified Schematic	8-219
8-74. A23 Bandwidth Filter No. 2 Assembly and A27 Bandwidth Filter No. 1 Assembly, Component Locations	8-220
8-75. A23 Bandwidth Filter No. 2 Assembly and A27 Bandwidth Filter No. 1 Assembly, Schematic Diagram	8-221
8-76. A24 Step Gain Amplifier/Oscillator Assembly, Simplified Schematic	8-223
8-77. Step Gain Amplifiers, Equivalent Circuit	8-215
8-78. 18.4 MHz Oscillator, Simplified Schematic	8-226
8-79. A24 Step Gain Amplifier/Oscillator Assembly, Component Locations	8-227
8-80. A24 Step Gain Amplifier Assembly (Option 002), Component Locations	8-228
8-81. A24 Step Gain Amplifier/Oscillator Assembly, Schematic Diagram	8-229
8-82. A25 Up-Down Converter Assembly, Component Locations	8-232
8-83. A25 Up-Down Converter Assembly, Schematic Diagram	8-233
8-84. Output Buffer Amplifier, Simplified Schematic	8-237
8-85. A26 3 MHz Filter Assembly, Component Locations	8-238
8-86. A26 3 MHz Filter Assembly, Schematic Diagram	8-239
8-87. Band Conversion Loss Compensation (Gain Switching), Simplified Schematic	8-242
8-88. A28 Variable Gain Assembly, Component Locations	8-243
8-89. A28 Variable Gain Assembly, Schematic Diagram	8-243
8-90. A29 RF-IF Motherboard, Component Locations	8-245
8-91. A29 RF-IF Motherboard Assembly, Schematic Diagram	8-245
8-92. INPUT 50 Ohm Connector J1, Exploded View	8-249
8-93. A30 First Mixer Assembly	8-251
8-94. A30 First Mixer Assembly, Simplified Schematic	8-252
8-95. A30 First Mixer Assembly, A31 YIG-Tuned Oscillator Assembly, A32 YIG-Tuned Filter Assembly, A33 Limiter, A34 RF Attenuator, Schematic Diagram	8-253
8-96. A35 Second Converter Assembly, Component Locations	8-257
8-97. A35 Second Converter Assembly, Schematic Diagram	8-257
8-98. 240 kHz Discriminator, Simplified Schematic	8-261
8-99. Discriminator Wave Shapes	8-262
8-100. Discriminator Output ERROR Signal	8-263
8-101. A36A1 Discriminator Assembly, Component Locations	8-264
8-102. A36A2 VCXO Assembly, Component Locations	8-265
8-103. A36 Tuning Stabilizer Assembly, Schematic Diagram	8-267
8-104. A37 Third Converter Assembly, Simplified Block Diagram	8-269
8-105. Substitute Divider Probe	8-272
8-106. A37 Third Converter Assembly, Component Locations	8-273
8-107. A37 Third Converter Assembly, Schematic Diagram	8-273
8-108. +158V Regulator Circuit, Simplified Schematic	8-276
8-109. A40A1 Rectifier Assembly, Component Locations	8-277
8-110. A40A2 Regulator Assembly, Component Locations	8-278
8-111. A40A1 Rectifier Assembly, A40A2 Regulator Assembly, and A41 Line Module and Cable Assembly, Schematic Diagram	8-279
8-112. Comb Generator Assembly (Option 001), Component Locations	8-285
8-113. Comb Generator Assembly (Option 001), Schematic Diagram	8-285
8-114. HP-IB Interface Connections and Bus Structure	8-288
8-115. A43 HP-IB Connector Assembly, Component Locations	8-291
8-116. A43 HP-IB Connector Assembly, Schematic Diagram	8-291
8-117. Rear Panel Connections	8-293
8-118. HP Model 8569B Major Assembly and Component Locations, Front Panel	8-295
8-119. HP Model 8569B Major Assembly and Component Locations, Bottom View	8-295
8-120. HP Model 8569B Major Assembly and Component Locations, Top View	8-295

LIST OF TABLES

Table		Page
6-1.	Reference Designations and Abbreviations	6-1
6-2.	Manufacturers Code List	6-4
6-3.	Replaceable Parts	6-5
6-4.	Rack Mount and Handle Kits	6-108
8-1.	Service Information Index	8-2
8-2.	Microprocessor Addresses	8-78

SECTION VI
REPLACEABLE PARTS

6-1. INTRODUCTION

6-2. This section contains information for ordering parts. Table 6-1 includes a list of reference designations and a list of abbreviations used in the parts list. Table 6-2 lists names and addresses that correspond to the manufacturer code numbers in the parts list. Table 6-3 lists all replaceable parts in alpha-numerical order by reference designation.

6-3. REPLACEABLE PARTS LIST

6-4. Table 6-3, the list of replaceable parts, is organized as follows:

1. Electrical assemblies and their components in alpha-numerical order by reference designation.
2. Miscellaneous parts, at end of list for each major assembly.
3. Chassis-mounted parts, in alpha-numerical order by reference designation, at end of parts list.

6-5. The following information is listed for each part:

1. The Hewlett-Packard part number.
2. The part number check digit (CD).
3. The total quantity (Qty) in the instrument. This quantity is given only once, at the first apppearance of the part in the list.
4. The description of the part.
5. A typical manufacturer of the part in a five-digit code.
6. The manufacturer part number.

6-6. ORDERING INFORMATION

6-7. To order a part listed in the replaceable parts table, quote the Hewlett-Packard part number (with check digit), indicate the quantity required, and address the order to the nearest Hewlett-Packard office. The check digit will ensure accurate and timely processing of your order.

6-8. To order a part that is not listed in the replaceable parts table, include the instrument model number, instrument serial number, the description and function of the part, and the number of parts required. Address the order to the nearest Hewlett-Packard office.

Table 6-1. Reference Designations and Abbreviations (1 of 4)

REFERENCE DESIGNATIONS

A	Assembly	F	Fuse	RT	Thermistor
AT	Attenuator, Isolator, Limiter, Termination	FL	Filter	S	Switch
B	Fan, Motor	H	Hardware	T	Transformer
BT	Battery	HY	Circulator	TB	Terminal Board
C	Capacitor	J	Electrical Connector (Stationary Portion), Jack	TC	Thermocouple
CP	Coupler	K	Relay	TP	Test Point
CR	Diode, Diode Thyristor, Step Recovery Diode (SCR), Varactor	L	Coil, Inductor	U	Integrated Circuit, Microcircuit
DC	Directional Coupler	M	Meter	V	Electron Tube
DL	Delay Line	MP	Miscellaneous Mechanical Part	VR	Breakdown Diode (Zener), Voltage Regulator
DS	Annunciator, Lamp, Light Emitting Diode (LED), Signaling Device (Audible or Visible)	P	Electrical Connector (Movable Portion), Plug	W	Cable, Transmission Path, Wire
E	Miscellaneous Electrical Part	Q	Silicon Controlled Rectifier (SCR), Transistor, Triode Thyristor	X	Socket
		R	Resistor	Y	Crystal Unit (Piezoelectric, Quartz)
				Z	Tuned Cavity, Tuned Circuit

NOTE

All abbreviations in the parts list will be in upper-case.

ABBREVIATIONS

A

A .... Across Flats, Acrylic, Air (Dry Method), Ampere
AD .... Anode
ADJ .... Adjust, Adjustment
AL .... Aluminum
ALTNG .... Alternating
AMP .... Amperage
ANLG .... Analog
ANSI .... American National Standards Institute (formerly USASI-ASA)
ASSY .... Assembly
ASYNCHRO .... Asynchronous
AWG .... American Wire Gage

B

BD .... Board, Bundle
BDR .... Binder
BE .... Baume, Beryllium
BE-CU .... Beryllium Copper
BE-CU .... Beryllium Copper
BFR .... Before, Buffer
BIN .... Bin Box (Container), Binary
BLK .... Black, Blank, Block
BLU .... Blue
BPF .... Bandpass Filter
BRDG .... Bridge
BRG .... Bearing, Boring
BRN .... Brown
BRS .... Brass
BSC .... Basic
BSHG .... Bushing
BV .... Breakdown Voltage
BW .... Bandwidth

C

C .... Capacitance, Capacitor, Center Tapped, Centistoke, Ceramic, Cermet, Circular Mil Foot, Closed Cup, Cold, Compression
C-C .... Center to Center
CC .... Carbon Composition, Cubic Centimeter
CER .... Ceramic
CFM .... Cubic Feet Per Minute
CH .... Center Hole
CHAM .... Chamfer
CHAN .... Channel
CHAR .... Character, Characteristic, Charcoal
CLR .... Clear, Collar, Color
CMOS .... Complementary Metal Oxide Semiconductor
CNDCT .... Conducting, Conductive, Conductivity, Conductor
CNTR .... Container, Counter
COAX .... Coaxial
COM .... Commercial, Common
COMP .... Compensator, Composition
CONT .... Contact, Continuous, Control, Controller
CP .... Cadmium Plate, Candle Power, Centipoise, Conductive Plastic, Cone Point
CPRSN .... Compression
CRT .... Cathode-Ray Tube, Crate
CU .... Copper, Cubic

D

D .... Deep, Depletion, Depth, Diameter, Direct Current
DAP .... Diallyl Phthalate
DAP-GL .... Diallyl Phthalate Glass
DB .... Decibel, Double Break
DBL .... Double
DBM .... Decibels Referred to 1 Milliwatt
DCDR .... Decoder
DECD .... Decade
DEG .... Degree
DIA .... Diameter
DIEL .... Dielectric
DIP .... Dual In-Line Package
DIP-SLDR .... Dip Solder
DIV .... Division
DLRN .... Delrin
D-MODE .... Depletion Mode
DO .... Package Type Designation
DPDT .... Double Pole Double Throw
DRVR .... Driver
DVM .... Digital Voltmeter
DWL .... Dowel
DX .... Duplex

E

E .... Enamel (Insulation), Enhancement, Extension
EPROM .... Erasable Programmable Read-Only Memory
E-R .... E-Ring
EXCL .... Excluding, Exclusive
EXT .... Extended, Extension, External, Extinguish
EXTR .... Extractor

F

F .... Fahrenheit, Farad, Female, Film (Resistor), Fixed, Flange, Flint, Fluorine, Frequency
FC .... Carbon Film / Composition, Edge of Cutoff Frequency, Face
FDTHRU .... Feed Through
FEM .... Female
FET .... Field-Effect Transistor
FF .... Flange, Female Connection; Flip Flop
FL .... Flash, Flat, Fluid
FLEX .... Flexible
FLG .... Flange
FM .... Flange, Male Connection; Foam, Frequency Modulation
FR .... Folder, Frame, Frequency Response, From, Front, Frosted
FREQ .... Frequency
FT .... Current Gain Bandwidth Product (Transition Frequency); Feet, Foot
FW .... Full Wave
FXD .... Fixed

G

GE .... Germanium
GEN .... General, Generator
GL .... Glass
GND .... Ground
GP .... General Purpose, Group
GRA .... Gray
GRN .... Green

H

HD .... Hand, Hard, Head, Heavy Duty
HEX .... Hexadecimal, Hexagon, Hexagonal
HI .... High
HLCL .... Helical
HPIB .... Hewlett-Packard Interface Bus
HP-IB .... Hewlett-Packard Interface Bus
HS .... Heat Sealed, Heat Shrink, High Speed

I

IC .... Collector Current, Integrated Circuit
ID .... Identification, Inside Diameter
IF .... Forward Current, Intermediate Frequency
IN .... Inch, Indium
INCL .... Including
INDL .... Industrial
INFO .... Information
INP .... Input
INT .... Integral, Intensity, Internal
INTL .... Internal, International
INV .... Invert, Inverter
IP .... Peak Point (Emitter) Current, Pinch-Off Current, Primary Current, Regulator Current

J

J .... Jack, Joule, Junction
J-FET .... Junction Field Effect Transistor
JGK .... Jade Gray Knob (HP 6009-0021)
JKT .... Jacket

K

K .... Kelvin, Key, Kilo, Kilohm, Potassium
KVDC .... Kilovolts Direct Current

L

L .... Inductance, Left, Length, Liquid, Locking Threaded, Long, Low

NOTE

All abbreviations in the parts list will be in upper-case.

Table 6-1. Reference Designations and Abbreviations (3 of 4)

LCH .... Latch
LED .... Light Emitting Diode
LG .... Length, Long
LIN .... Linear, Linear Taper, Linearity
LK .... Link, Lock
LKWR .... Lockwasher
LO .... Local Oscillator, Low
LOG .... Logarithm, Logarithmic, Logarithmic Taper
LPF .... Low Pass Filter
LS .... Loudspeaker, Low Power Schottky, Series Inductance
LUM .... Luminous

M

M .... Male, Maximum, Mega, Mil, Milli, Mode, Momentary, Mounting Hole Centers, Mounting Hole Diameter
MA .... Milliampere
MACH .... Machined
MAX .... Maximum
MCD .... Millicandela
MET .... Metal, Metallic, Metallized, Metallurgical
MHZ .... Megahertz
MINTR .... Miniature
MISC .... Miscellaneous
MLD .... Mold, Molded
MM .... Magnetized Material (Restricted Articles Code); Millimeter
MOM .... Momentary
MONOSTBL .... Monostable
MOS .... Metal Oxide Semiconductor
MOSFET .... Metal Oxide Semiconductor Field Effect Transistor
MPU .... Microprocessor Unit
MTG .... Mounting
MTLC .... Metallic
MULTIPLXR .... Multiplexer
MUW .... Music Wire
MUXR .... Multiplexer
MV .... Millivolt, Multivibrator
MW .... Milliwatt

N

N .... Fan Out, Intrinsic Stand Off Ratio, Nano, Nanosecond, Nitrogen, None
NAND .... Logic Not-AND
N-CHAN .... N-Channel
NEG .... Negative
NEOPRN .... Neoprene
NM .... Nanometer, Nonmetallic
NMOS .... N-Channel Metal Oxide Semiconductor
NO .... Normally Open, Number
NON .... Noninductive
NON-INV .... Non-Inverting
NOR .... Logic Not-OR
NPN .... Negative Positive Negative (Transistor)
NS .... Nanosecond, Non-Shorting, Nose
NSR .... Not Separately Replaceable
NTD .... Non-Time-Delay
NUM .... Numeric, Numerical
NYL .... Nylon (Polyamide)

O

OA .... Other Restricted Articles, Group A (Restricted Articles Code); Over-All
OCTL .... Octal
OD .... Olive Drab, Outside Diameter
OP .... Operational
OPN .... Open, Operation
OPT .... Optical, Option, Optional
ORN .... Orange
OSC .... Oscillator, Overlap Slotted Container (All Flaps Same Length)
OVH .... Oval Head

P

P .... Peak, Phosphorus, Pico, Picosecond, Pitch, Plastic, Plug, Pole, Polyester, Power, Probe, Pure
PA .... Picoampere, Power Amplifier, Pressure Angle, Protactinium
PB .... Lead (Metal), Push Button
PC .... Picocoulomb, Piece, Printed Circuit
PCB .... Printed Circuit Board
PD .... Pad, Palladium, Pitch Diameter, Power Dissipation
PF .... Picofarad; Pipe, Female Connection; Power Factor
PHEN .... Bakelite (Phenolic)
PKG .... Package
PLS .... Plastic
PLSTC .... Plastic
PMOS .... P-Channel Metal Oxide Semiconductor
PNL .... Panel
PNP .... Positive Negative Positive (Transistor)
POLYC .... Polycarbonate
POLYE .... Polyester
POLYSTY .... Polystyrene
POLYU .... Polyurethane
POS .... Position, Positive
POT .... Potentiometer
POZI .... Pozidriv Recess
PPR .... Paper
PRCN .... Precision
PREC .... Precision
PRGMBL .... Programmable
PRL .... Parallel
PRP .... Purple, Purpose
PT .... Part, Pint, Platinum, Point, Pulse Time
PVF .... Kynar, Polyvinyl Fluoride, Polyvinylidene Fluoride
PVIF .... Polyvinylidene Fluoride
PWR .... Power

Q

Q .... Figure of Merit
QUAD .... Set of Four

R

RAM .... Random Access Memory
RBR .... Rubber
RCVD .... Recovered
RCVR .... Receiver
RECT .... Rectangle, Rectangular, Rectifier
RED .... Red
REF .... Reference
RES .... Research, Resistance, Resistor, Resolution
RETRIG .... Retriggerable
RFI .... Radio Frequency Interference
RGLTR .... Regulator
RGTR .... Register
RKR .... Rocker
RND .... Round
RTANG .... Retaining, Right Angle
RVT .... Rivet, Riveted

S

S .... Saybolt Seconds Universal, Scattering Parameter, Schottky, Screw Size, Second, Shorting, Side, Siemens, Silicone, Silk (Insulation), Soft, Solid, Square Mil Foot, Standard Threaded, Start Torque, Stearine, Steel, Strut Center Spacing, Stud Size, Sulfur
SCR .... Screw, Scrub, Silicon Controlled Rectifier
SEG .... Sealing
SEL .... Select, Selected
SEMITUB .... Semitubular
SGL .... Single
SHF .... Shift, Super High Frequency
SHF-RGTR .... Shift Register
SHLD .... Shield
SI .... Silicon, Square Inch
SIG .... Signal, Significant
SIP .... Single In-Line Package
SLDR .... Solder
SLT .... Slate, Slot, Slotted
SM .... Machine Screw, Samarium, Seam, Small, Square Meter, Sub Modular, Subminiature
SMA .... Subminiature, A Type (Threaded Connector)
SMC .... Subminiature, C Type (Threaded Connector)
SPCG .... Spacing
SPCL .... Special
SPCLY .... Specialty
SPR .... Spring
SQ .... Square
SST .... Stainless Steel
STA .... Station, Stationary
STAT .... Status
STL .... Steel
STP .... Stamp
SUB .... Subsidiary
SUBMIN .... Subminiature
SW .... Single Wall, Switch
SWGFRM .... Swageform
SZ .... Size

NOTE

All abbreviations in the parts list will be in upper-case.

Table 6-1. Reference Designations and Abbreviations (4 of 4)

T

T .... Tab Width, Taper, Teeth, Temperature, Tera, Tesla, Thermoplastic (Insulation), Thickness, Time, Timed, Tooth, Turns Ratio, Typical
TA .... Ambient Temperature, Tantalum
TBAX .... Tube Axial
TC .... Thermoplastic
TERM .... Terminal, Termination
THD .... Thread, Threaded
THK .... Thick
THKNS .... Thickness
TPG .... Tapping
TRIG .... Trigger, Triggerable, Triggering, Trigonometry
TRMR .... Trimmer
TRN .... Turn, Turns
TRSN .... Torsion
TTL .... Tan Translucent, Transistor Transistor Logic
TUR .... Turn, Turret

U

UA .... Microampere
UCD .... Microcandela
UF .... Microfarad
UH .... Microhenry
UL .... Microliter, Underwriters' Laboratories, Inc.
UNHDND .... Unhardened
UNMTD .... Unmounted

V

VAC .... Vacuum; Volts, Alternating Current
VAR .... Variable
VCXO .... Voltage-Controlled Crystal Oscillator
VIO .... Violet
VRRM .... Repetitive Peak Inverse Voltage

W

W .... Watt, Wattage, White, Wide, Width, Wire
WB .... Wide Band
WD .... Width, Wood
WHT .... White
W/LKWR .... With Lock Washer
WW .... Wire Wound

X

XSTR .... Transistor

Y

YEL .... Yellow
YTF .... YIG-Tuned Filter

Z

ZNR .... Zener

NOTE

All abbreviations in the parts list will be in upper-case.

Table 6-2. Manufacturers Code List

Mfr. No.	Manufacturer Name	Address	Zip Code
00000	ANY SATISFACTORY SUPPLIER		
00471	DOW-KEY CO INC	BROOMFIELD, WY	80020
01121	ALLEN-BRADLEY CO	MILWAUKEE, WI	53204
01295	TEXAS INSTR INC SEMICOND CMPNT DIV	DALLAS, TX	75222
01884	SPRAGUE ELECTRIC DEARBORN ELEK DIV	LONGWOOD, FL	32750
02111	SPECTROL ELECTRONICS CORP	CITY OF IND, CA	91745
02114	FERROXCUBE CORP	SAUGERTIES, NY	12477
02660	BUNKER RAMO CORP AMPHENOL CONN DIV	BROADVILLE, IL	60153
02768	ILLINOIS TOOL WORKS INC FASTEX DIV	DES PLAINES, IL	60016
03888	K D I PYROFILM CORP	WHIPPANY, NJ	07981
04713	MOTOROLA SEMICONDUCTOR PRODUCTS	PHOENIX, AZ	85008
05245	CORCOM INC	CHICAGO, IL	60657
05820	WAKEFIELD ENGINEERING INC	WAKEFIELD, MA	01880
06383	PANDUIT CORP	TINLEY PARK, IL	60477
06665	PRECISION MONOLITHICS INC	SANTA CLARA, CA	95050
07263	FAIRCHILD SEMICONDUCTOR DIV	MOUNTAIN VIEW, CA	94042
08588	BRIDGEPORT BRASS CO	BRIDGEPORT, CT	06604
11236	CTS OF BERNE INC	BERNE, IN	46711
16546	U S CAPACITOR CORP	BURBANK, CA	91504
17856	SILICONIX INC	SANTA CLARA, CA	95054
18324	SIGNETICS CORP	SUNNYVALE, CA	94086
19701	MEPCO/ELECTRA CORP	MINERAL WELLS, TX	76067
24046	TRANSITRON ELECTRONIC CORP	WAKEFIELD, MA	01880
24355	ANALOG DEVICES INC	NORWOOD, MA	02062
24546	CORNING GLASS WORKS (BRADFORD)	BRADFORD, PA	16701
27014	NATIONAL SEMICONDUCTOR CORP	SANTA CLARA, CA	95051
28480	HEWLETT-PACKARD CO CORPORATE HQ	PALO ALTO, CA	94304
29832	TELEDYNE PHILBRICK NEXUS	DEDHAM, MA	02026
3L585	RCA CORP SOLID STATE DIV	SOMERVILLE, NJ	
30161	AAVID ENGINNERING INC	LACONIA, NH	03246
30983	MEPCO/ELECTRA CORP	SAN DIEGO, CA	92121
33095	SPECTRUM CONTROL INC	FAIRVIEW, PA	16415
34335	ADVANCED MICRO DEVICES INC	SUNNYVALE, CA	94086
34649	INTEL CORP	MOUNTAIN VIEW, CA	95051
51642	CENTRE ENGINEERING INC	STATE COLLEGE, PA	16801
52063	EXAR INTEGRATED SYSTEMS INC	SUNNYVALE, CA	94086
52763	STETTNER-TRUSH INC	CAZENOVIA, NY	13035
56289	SPRAGUE ELECTRIC CO	NORTH ADAMS, MA	01247
6F689	STOCK DRIVE PRODUCTS	HYDE PARK, NY	11040
72136	ELECTRO MOTIVE CORP	FLORENCE, SC	06226
72982	ERIE TECHNOLOGICAL PRODUCTS INC	ERIE, PA	16512
74970	JOHNSON E F CO	WASECA, MN	56093
75042	TRW INC PHILADELPHIA DIV	PHILADELPHIA, PA	19108
75915	LITTELFUSE INC	DES PLAINES, IL	60016
78707	TEK BEARING CO INC	NEW YORK, NY	10013
84411	TRW CAPACITOR DIV	OGALLALA, NE	69153
87730	UNITED MINERAL & CHEMICAL CORP	NEW YORK, NY	10013
7D949	AMPHENOL SALES DIV OF BUNKER-RAMO	BROADVIEW, IL	60153
91506	AUGAT INC	ATTLEBORO, MA	02703
91637	DALE ELECTRONICS INC	COLUMBUS, NE	68601
98291	SEALECTRO CORP	MAMARONECK, NY	10544

Table 6-3. Replaceable Parts

Reference Designation	HP Part Number	C D	Qty	Description	Mfr Code	Mfr Part Number
A1	08569-60076	4	1	FRONT PANEL DISPLAY ASSEMBLY	28480	08569-60076
A1 (OPT 001)	08569-60077	5	1	FRONT PANEL DISPLAY ASSEMBLY(OPT 001)	28480	08569-60077
A1MP1	08569-20016	8	1	PANEL-CAST, FRONT DISPLAY	28480	08569-20016
A1MP2	08569-00041	7	1	PANEL-DRESS, FRONT DISPLAY	28480	08569-00041
A1MP2 (OPT 001)	08569-00042	8	1	PANEL-DRESS,FRONT DISPLAY(OPT 001)	28480	08569-00042
A1MP3	08565-60170	5	2	KNOB ASSEMBLY-SMALL POT	28480	08565-60170
A1MP4	08565-60170	5		KNOB ASSEMBLY-SMALL POT	28480	08565-60170
A1MP5- A1MP10	5040-8821	0	6	PUSHBUTTON-SQUARE, OLIVE GRAY	28480	5040-8821
A1MP11	5040-8817	4		PUSHBUTTON-SQUARE, JADE GRAY	28480	5040-8817
A1MP12	5040-8819	6	2	PUSHBUTTON-SQUARE, WILLOW GREEN	28480	5040-8819
A1MP13	5040-8819	6		PUSHBUTTON-SQUARE, WILLOW GREEN	28480	5040-8819
A1MP14	5040-8817	4		PUSHBUTTON-SQUARE, JADE GRAY	28480	5040-8817
A1MP15	5040-8817	4		PUSHBUTTON-SQUARE, JADE GRAY	28480	5040-8817
A1MP16	5040-8817	4		PUSHBUTTON-SQUARE, JADE GRAY	28480	5040-8817
A1MP17	5040-8816	3	4	PUSHBUTTON-SQUARE, MINT GRAY	28480	5040-8816
A1MP18	5040-8816	3		PUSHBUTTON-SQUARE, MINT GRAY	28480	5040-8816
A1MP19	5040-8816	3		PUSHBUTTON-SQUARE, MINT GRAY	28480	5040-8816
A1MP20	5040-8816	3		PUSHBUTTON-SQUARE, MINT GRAY	28480	5040-8816
A1MP21	5040-7253	0	1	BEZEL-CRT	28480	5040-7253
A1MP22	9135-0052	8	1	RFI CRT SHIELD	28480	9135-0052
A1MP23	3101-2188	8	1	SWITCH-PUSHBUTTON DPDT 1-STA	28480	3101-2188
A1MP24	2420-0003	7	2	NUT-HEX-DBL-CHAM 6-32-THD .094-IN-THK	00000	ORDER BY DESCRIPTION
A1MP25	2420-0003	7		NUT-HEX-DBL-CHAM 6-32-THD .094-IN-THK	00000	ORDER BY DESCRIPTION
A1MP26	2360-0113	2	4	SCREW-MACH 6-32 .25-IN-LG PAN-HD-POZI	00000	ORDER BY DESCRIPTION
A1MP27	2360-0113	2		SCREW-MACH 6-32 .25-IN-LG PAN-HD-POZI	00000	ORDER BY DESCRIPTION
A1MP28	2360-0113	2		SCREW-MACH 6-32 .25-IN-LG PAN-HD-POZI	00000	ORDER BY DESCRIPTION
A1MP29	2360-0113	2		SCREW-MACH 6-32 .25-IN-LG PAN-HD-POZI	00000	ORDER BY DESCRIPTION
A1MP30	0520-0164	1	2	SCREW-MACH 2-56 .25-IN-LG 82 DEG	00000	ORDER BY DESCRIPTION
A1MP31	0520-0164	1		SCREW-MACH 2-56 .25-IN-LG 82 DEG	00000	ORDER BY DESCRIPTION
A1MP32- A1MP35	0380-1042	8	4	SPACER	00000	ORDER BY DESCRIPTION
A1W1	08569-60025	3	1	CABLE ASSEMBLY-DISPLAY SWITCH	28480	08569-60025
				A1 MISCELLANEOUS PARTS		
	0370-0606	7	16	BEZEL-PUSHBUTTON 0.330-IN SQ; JADE GRAY	28480	0370-0606
	1520-0215	4	1	SHOCK PAD NPRN 4.5-WD 5.75-LG	28480	1520-0215
	2190-0007	2	6	WASHER-LK INTL T NO. 6 .141-IN-ID	28480	2190-0007
	7120-3812	1	1	LABEL-INFO	28480	7120-3812
	0520-0164	1	2	SCREW-MACH 2-56 .25-IN-LG 82 DEG	28480	0520-0164
	0520-0173	2	2	SCREW-MACH 2-56 .188-IN-LG PAN-HD-POZI	28480	0520-0173
				MISCELLANEOUS PARTS(OPT 001)		
	2190-0014	1	2	WASHER-LK INTL T NO. 2 .089-IN-ID	28480	2190-0014
	3101-2426	7	1	SWITCH-PB DPDT ALTNG .25A 115VAC	28480	3101-2426
	5040-8817	4	1	PUSHBUTTON-SQUARE, JADE GRAY	28480	5040-8817
A1A1	08569-60001	5	1	DISPLAY SWITCH ASSEMBLY	28480	08569-60001
A1A1J1	1251-6861	7	1	CONNECTOR-PC 20-MALE, 2-ROW	28480	1251-6861
A1A1R1	2100-3631	5	2	RESISTOR-VAR CONTROL CP 10K 10% LIN	28480	2100-3631
A1A1R2	2100-3631	5		RESISTOR-VAR CONTROL CP 10K 10% LIN	28480	2100-3631
A1A1S1	3101-2189	9	4	SWITCH-PB DPDT MOM .125A 115VAC	28480	3101-2189
A1A1S2	3101-2185	5	2	SWITCH-PB 4-STATION 10MM C-C SPACING	28480	3101-2185
A1A1S3	3101-2185	5		SWITCH-PB 4-STATION 10MM C-C SPACING	28480	3101-2185
A1A1S4	3101-2124	2	3	SWITCH-PB DPDT ALTNG .25A 115VAC	28480	3101-2124
A1A1S5	3101-2124	2		SWITCH-PB DPDT ALTNG .25A 115VAC	28480	3101-2124
A1A1S6	3101-2124	2		SWITCH-PB DPDT ALTNG .25A 115VAC	28480	3101-2124
A1A1S7	3101-2189	9		SWITCH-PB DPDT MOM .125A 115VAC	28480	3101-2189
A1A1S8	3101-2189	9		SWITCH-PB DPDT MOM .125A 115VAC	28480	3101-2189
A1A1S9	3101-2189	9		SWITCH-PB DPDT MOM .125A 115VAC	28480	3101-2189

See introduction to this section for ordering information
*Indicates factory selected value

Table 6-3. Replaceable Parts

Reference Designation	HP Part Number	C D	Qty	Description	Mfr Code	Mfr Part Number
A2	08569-60078	6	1	FRONT PANEL CONTROL ASSEMBLY	28480	08569-60078
A2 (OPT 002)	08569-60063	9	1	FRONT PANEL CONTROL ASSY(OPT 002)	28480	08569-60063
A2DS1	1990-0717	6	2	LED-LAMP LUM-INT=800UCD IF=30MA-MAX	28480	HLMP-1501
A2DS2	1990-0717	6		LED-LAMP LUM-INT=800UCD IF=30MA-MAX	28480	HLMP-1501
A2DS3	1990-0718	7	1	LED-LAMP LUM-INT=1MCD IF=20MA-MAX BVR=5V	28480	HLMP-1401
A2MP1	08569-00043	9	1	PANEL-DRESS, CONTROL	28480	08569-00043
A2MP2	08565-00133	4	1	PANEL-SUB-FRONT	28480	08565-00133
A2MP3	08565-20040	4	1	WINDOW-FREQ. DISPLAY	28480	08565-20040
A2MP4	08565-20008	4	1	KNOB-FINE TUNE	28480	08565-20008
A2MP5	08565-60041	9	1	KNOB ASSEMBLY-COARSE TUNING	28480	08565-60041
A2MP6	08565-60043	1	1	KNOB ASSEMBLY-FREQ. SPAN/DIV.	28480	08565-60043
A2MP7(OPT 002)	08565-60044	2	1	KNOB ASSEMBLY-RES BW (OPTION 002)	28480	08565-60044
A2MP7	08565-60050	0	1	KNOB ASSEMBLY-RES BW (STANDARD)	28480	08565-60050
A2MP8	08558-60167	1	1	KNOB ASSEMBLY-REFERENCE LEVEL	28480	08558-60167
A2MP9	08565-40011	1	1	POINTER-INPUT ATTENUATOR	28480	08565-40011
A2MP10	08565-00043	5	1	DISK-INDEX (REF. LEVEL DBM)	28480	08565-00043
A2MP11	08565-60047	5	1	KNOB ASSEMBLY-REF. LEVEL FINE	28480	08565-60047
A2MP12	08569-60042	4	1	KNOB ASSEMBLY-SWEEP TIME/DIV.	28480	08569-60042
A2MP13	08565-20108	5	2	ROTOR-SWEEP TIME	28480	08565-20108
A2MP14	08565-20056	2	2	SHAFT-SWEEP TIME	28480	08565-20056
A2MP15	08565-20058	4	2	HUB-ROTARY SWITCH	28480	08565-20058
A2MP16-			1			
A2MP38	0370-0606	7	24	BEZEL-PUSHBUTTON 0.330-IN SQ; JADE GRAY	28480	0370-0606
A2MP39	5040-8816	3	1	PUSHBUTTON-SQUARE, MINT GRAY	28480	5040-8816
A2MP40- A2MP55	5040-8817	4	15	PUSHBUTTON-SQUARE, JADE GRAY	28480	5040-8817
A2MP56- A2MP59	5040-8819	6	5	PUSHBUTTON-SQUARE, WILLOW GREEN	28480	5040-8819
A2MP60- A2MP65	5040-8821	0	6	PUSHBUTTON-SQUARE, OLIVE GRAY	28480	5040-8821
A2MP66				NOT ASSIGNED		
A2MP67	08558-20053	0	1	SHAFT-REFERENCE LEVEL, FINE	28480	08558-20053
A2MP68	08558-00019	6	1	DETENT-ATTENUATOR	28480	08558-00019
A2MP69	08558-00020	9	1	DETENT-IF GAIN	28480	08558-00020
A2MP70	08558-00021	0	1	PLATE-LEVEL POT	28480	08558-00021
A2MP71	08558-00022	1	1	CRANK-SLOTTED	28480	08558-00022
A2MP72	08558-20058	5	1	HUB-COUPLING	28480	08558-20058
A2MP73	08559-20054	2	3	HUB-DRIVE (FREQUENCY SPAN/DIV)	28480	08559-20054
A2MP74	08559-60060	4	2	HUB-DRIVE (REFERENCE LEVEL,FRONT)	28480	08559-60060
A2MP75	08558-20059	6	1	HUB-DRIVE(RESOLUTION BW)	28480	08558-20059
A2MP76	08559-60060	4		HUB-DRIVE (REFERENCE LEVEL,REAR)	28480	08559-60060
A2MP77	08558-20061	0	1	LOCKOUT-ROTATING	28480	08558-20061
A2MP78	08558-20062	1	1	LOCKOUT-FIXED	28480	08558-20062
A2MP79	08558-20089	2	1	BUSHING-SLOTTED	28480	08558-20089
A2MP80	08558-40005	4	2	ROTOR-DOUBLE CONTACT (ATTENUATOR)	28480	08558-40005
A2MP81	08558-40005	4		ROTOR-DOUBLE CONTACT (ATTENUATOR)	28480	08558-40005
A2MP82	08565-00005	9	1	DETENT-BANDWIDTH	28480	08565-00005
A2MP83	08565-00006	0	3	DETENT	28480	08565-00006
A2MP84	08565-20009	5	1	ROTOR-FREQUENCY SPAN	28480	08565-20009
A2MP85	08565-20044	8	1	SHAFT-RESOLUTION BANDWIDTH	28480	08565-20044
A2MP86	08565-20045	9	1	SHAFT-REFERENCE LEVEL	28480	08565-20045
A2MP87	08565-20046	0	1	SHAFT-FIXED	28480	08565-20046
A2MP88	08565-20049	3	2	BUSHING-FREQUENCY SPAN	28480	08565-20049
A2MP89	08565-20049	3		BUSHING-REFERENCE LEVEL	28480	08565-20049
A2MP90	08565-20050	6	1	NUT POINT/RETAINER	28480	08565-20050
A2MP91	08565-20094	8	1	ROTOR-BANDWIDTH	28480	08565-20094
A2MP92	2200-0119	0	1	SCREW-MACH 4-40 1-IN-LG PAN-HD-POZI	00000	ORDER BY DESCRIPTION
A2MP93	2200-0165	6	2	SCREW-MACH 4-40 .25-IN-LG 82 DEG	00000	ORDER BY DESCRIPTION
A2MP94	2200-0165	6		SCREW-MACH 4-40 .25-IN-LG 82 DEG	00000	ORDER BY DESCRIPTION
A2MP95	2200-0509	2	2	SCREW-MACH 4-40 1.625-IN-LG PAN-HD-POZI	00000	ORDER BY DESCRIPTION
A2MP96	2200-0509	2		SCREW-MACH 4-40 1.625-IN-LG PAN-HD-POZI	00000	ORDER BY DESCRIPTION
A2MP97	2200-0558	1	3	SCREW-MACH 4-40 2.25-IN-LG PAN-HD-POZI	28480	2200-0558
A2MP98	2200-0558	1		SCREW-MACH 4-40 2.25-IN-LG PAN-HD-POZI	28480	2200-0558
A2MP99	2200-0558	1		SCREW-MACH 4-40 2.25-IN-LG PAN-HD-POZI	28480	2200-0558
A2MP100	08565-20055	1	2	BUSHING	28480	08565-20055
A2MP101				NOT ASSIGNED		
A2MP102	08565-00006	0		DETENT	28480	08565-00006
A2MP103	0380-0440	8	1	SPACER-RND .75-IN-LG .129-IN-ID	28480	0380-0440
A2MP104	0380-0441	9	3	SPACER-RND .875-IN-LG .129-IN-ID	28480	0380-0441
A2MP105	0380-0441	9		SPACER-RND .875-IN-LG .129-IN-ID	28480	0380-0441
A2MP106	0380-0441	9		SPACER-RND .875-IN-LG .129-IN-ID	28480	0380-0441

See introduction to this section for ordering information
*Indicates factory selected value

Table 6-3. Replaceable Parts

Reference Designation	HP Part Number	C D	Qty	Description	Mfr Code	Mfr Part Number
A2MP107	0510-0089	8	1	RETAINER-RING BSC EXT .188-IN-DIA BE-CU	28480	0510-0089
A2MP108	1410-0006	8	4	BALL-BRG TYPE .1875-DIA GRADE-50 SST	78707	GRADE 50
A2MP109	1410-0006	8		BALL-BRG TYPE .1875-DIA GRADE-50 SST	78707	GRADE 50
A2MP110	1410-0006	8		BALL-BRG TYPE .1875-DIA GRADE-50 SST	78707	GRADE 50
A2MP111	1410-0006	8		BALL-BRG TYPE .1875-DIA GRADE-50 SST	78707	GRADE 50
A2MP112	1410-0730	5		BUSHING-PNL .127-ID .375-LG 1/4-28-THD	28480	1410-0730
A2MP113	1460-0532	0	1	SPRING-CPRSN .54-IN-OD .45-IN-OA-LG MUW	28480	1460-0532
A2MP114- A2MP117	1460-0578	4	4	SPRING-COMP .180 OD	28480	1460-0578
A2MP118	1460-1376	2	1	SPRING-TRSN MUW	28480	1460-1376
A2MP119	2950-0072	3	1	NUT-HEX-DBL-CHAM 1/4-32-THD .062-IN-THK	00000	ORDER BY DESCRIPTION
A2MP120- A2MP123	2950-0001	8		NUT-HEX-DBL-CHAM 3/8-32-THD .094-IN-THK	00000	ORDER BY DESCRIPTION
A2MP124	2950-0051	8		NUT-HEX-DBL-CHAM 1/4-28-THD .094-IN-THK	00000	ORDER BY DESCRIPTION
A2MP125- A2MP138	3030-0007	5	14	SCREW-SET 4-40 .125-IN-LG SMALL CUP-PT	00000	ORDER BY DESCRIPTION
A2MP139	2190-0067	4	2	WASHER-LK INTL T 1/4 IN .256-IN-ID	28480	2190-0067
A2MP140	2190-0067	4		WASHER-LK INTL T 1/4 IN .256-IN-ID	28480	2190-0067
A2MP141	2190-0368	8		WASHER-FL MTLC NO. 5 .13-IN-ID	28480	2190-0368
A2MP142	2190-0368	8		WASHER-FL MTLC NO. 5 .13-IN-ID	28480	2190-0368
A2MP143- A2MP156	2200-0103	2	14	SCREW-MACH 4-40 .25-IN-LG PAN-HD-POZI	00000	ORDER BY DESCRIPTION
A2MP157	2200-0153	2		SCREW-MACH 4-40 .875-IN-LG PAN-HD-POZI	00000	ORDER BY DESCRIPTION
A2MP158	2200-0153	2		SCREW-MACH 4-40 .875-IN-LG PAN-HD-POZI	00000	ORDER BY DESCRIPTION
A2MP159	2200-0153	2		SCREW-MACH 4-40 .875-IN-LG PAN-HD-POZI	00000	ORDER BY DESCRIPTION
A2MP160	0380-0034	6	3	SPACER-RND .312-IN-LG .116-IN-ID	28480	0380-0034
A2MP161	0380-0034	6		SPACER-RND .312-IN-LG .116-IN-ID	28480	0380-0034
A2MP162	0380-0034	6		SPACER-RND .312-IN-LG .116-IN-ID	28480	0380-0034
A2MP163- A2MP172	0380-0411	3	10	SPACER-RND .5-IN-LG .114-IN-ID	28480	0380-0411
A2MP173- A2MP189	2260-0001	5	12	NUT-HEX-DBL-CHAM 4-40-THD .094-IN-THK	28480	2260-0001
A2MP190				NOT ASSIGNED		
A2MP191- A2MP198	1480-0059	8	8	PIN-ROLL .062-IN-DIA .25-IN-LG STL	28480	1480-0059
A2MP199	1480-0367	1	1	PIN-DWL ANSI-UNHDND/GND .0625-IN-DIA	28480	1480-0367
A2MP200	2190-0016	3		WASHER-LK INTL T 3/8 IN .377-IN-ID	28480	2190-0016
A2MP201	2190-0016	3		WASHER-LK INTL T 3/8 IN .377-IN-ID	28480	2190-0016
A2MP202- A2MP209	2190-0019	6	8	WASHER-LK HLCL NO. 4 .115-IN-ID	28480	2190-0019
A2MP210	08565-20043	7	1	SHAFT-FREQUENCY SPAN	28480	08565-20043
A2MP213	08565-60170	5	3	KNOB ASSEMBLY-SMALL POT	28480	08565-60170
A2MP214	08559-20054	2		HUB-DRIVE	28480	08559-20054
A2R1	2100-3625	7	1	RESISTOR-VAR CONTROL WW 10K 5% LIN	28480	2100-3625
				A2 MISCELLANEOUS PARTS		
	0570-1170	6	4	SM 1032 SPCL	28480	0570-1170
	1480-0475	2	1	PIN-DOWEL .625 DIA	28480	1480-0475
	0510-0005	8	2	RETAINER-RING BSC EXT .25-IN-DIA STL	28480	0510-0005
	0510-0015	0	2	RETAINER-RING E-R EXT .125-IN-DIA STL	28480	0510-0015
	0380-0411	3	14	SPACER-RND .5-IN-LG .114-IN-ID	28480	0380-0411
	1251-4736	1	2	CONNECTOR 26-PIN M RECTANGULAR	28480	1251-4736
	1410-0006	8	6	BALL-BRG TYPE .1875-DIA GRADE-50 SST	78707	GRADE 50
	1410-0730	5	3	BUSHING-PNL .127-ID .375-LG 1/4-28-THD	28480	1410-0730
	1430-0555	4	4	GEAR-SPUR 48-T 48-DP 20-DEG-PA DLRN	6F689	1T2-Y4848
	1460-0578	4	6	SPRING-CPRSN .18-IN-OD .312-IN-OA-LG MUW	28480	1460-0578
	2190-0016	3	6	WASHER-LK INTL T 3/8 IN .377-IN-ID	28480	2190-0016
	2190-0019	6	12	WASHER-LK HLCL NO. 4 .115-IN-ID	28480	2190-0019
	2190-0368	8	4	WASHER-FL MTLC NO. 5 .13-IN-ID	28480	2190-0368
	2260-0001	5	16	NUT-HEX-DBL-CHAM 4-40-THD .094-IN-THK	28480	2260-0001
	2950-0001	8	6	NUT-HEX-DBL-CHAM 3/8-32-THD .094-IN-THK	00000	ORDER BY DESCRIPTION
	2950-0051	8	3	NUT-HEX-DBL-CHAM 1/4-28-THD .094-IN-THK	00000	ORDER BY DESCRIPTION
	3030-0007	5	18	SCREW-SET 4-40 .125-IN-LG SMALL CUP-PT	00000	ORDER BY DESCRIPTION
	3050-0028	2	2	WASHER-FL MTLC NO. 12 .25-IN-ID	28480	3050-0028
	3050-0156	7	6	WASHER-FL MTLC NO. 12 .25-IN-ID	28480	3050-0156
	3050-0161	4	2	WASHER-SPR WAVY 1/4 IN .265-IN-ID	28480	3050-0161
	5020-0324	0	2	SHAFT	28480	5020-0324
	2200-0153	2	7	SCREW-MACH 4-40 .875-IN-LG PAN-HD-POZI	00000	ORDER BY DESCRIPTION
A2A1	08565-60057	7	1	FRONT SWITCH ASSEMBLY	28480	08565-60057
A2A1C1	0160-0573	2	1	CAPACITOR-FXD 4700PF +-20% 100VDC CER	28480	0160-0573
A2A1CR1- A2A1CR8	1901-0050	3	27	DIODE-SWITCHING 80V 200MA 2NS DO-35	28480	1901-0050
A2A1CR9				NOT ASSIGNED		
A2A1CR10- A2A1CR28	1901-0050	3		DIODE-SWITCHING 80V 200MA 2NS DO-35	28480	1901-0050

See introduction to this section for ordering information
*Indicates factory selected value

Table 6-3. Replaceable Parts

Reference Designation	HP Part Number	C D	Qty	Description	Mfr Code	Mfr Part Number
A2A1J1	1251-3906	5	1	CONNECTOR 50-PIN M RECTANGULAR	28480	1251-3906
A2A1J2	1251-3025	9	1	CONNECTOR 34-PIN M RECTANGULAR	28480	1251-3025
A2A1R1	2100-3635	9	1	RESISTOR-VAR CONTROL CP 100K 10% LIN	28480	2100-3635
A2A1R2	2100-3631	5	3	RESISTOR-VAR CONTROL CP 10K 10% LIN	28480	2100-3631
A2A1R3	0757-0814	9	1	RESISTOR 511 1% .5W F TC=0+-100	28480	0757-0814
A2A1R4	0757-0465	6	1	RESISTOR 100K 1% .125W F TC=0+-100	24546	C4-1/8-T0-1003-F
A2A1R5				NOT ASSIGNED		
A2A1R6	2100-3631	5		RESISTOR-VAR CONTROL CP 10K 10% LIN	28480	2100-3631
A2A1R7	2100-3631	5		RESISTOR-VAR CONTROL CP 10K 10% LIN	28480	2100-3631
A2A1R8	0757-0198	2	1	RESISTOR 100 1% .5W F TC=0+-100	28480	0757-0198
A2A1R9	2100-3650	8	1	RESISTOR-VAR CONTROL CP 10K 10% LIN	28480	2100-3650
A2A1R10	0698-3444	1	1	RESISTOR 316 1% .125W F TC=0+-100	24546	C4-1/8-T0-316R-F
A2A1R11	2100-4019	5	1	RESISTOR-VAR 2K OHM 10%	28480	2100-4019
A2A1R12	0757-0733	1	1	RESISTOR 1.1K 1% .25W F TC=0+-100	28480	0757-0733
A2A1R13	0757-0734	2	1	RESISTOR 1.21K 1% .25W F TC=0+-100	28480	0757-0734
A2A1R14	2100-3350	5	1	RESISTOR-TRMR 200 10% C SIDE-ADJ 1-TRN	28480	2100-3350
A2A1S1	3101-2124	2	1	SWITCH-PUSHBUTTON DPDT 1-STA	28480	3101-2124
A2A1S2	3101-2186	6	1	SWITCH-PUSHBUTTON 3-STA	28480	3101-2186
A2A1S3	3101-2182	2	2	SWITCH-PUSHBUTTON 5-STA	28480	3101-2182
A2A1S4	3101-2181	1	1	SWITCH-PUSHBUTTON 5-STA	28480	3101-2181
A2A1S5	3101-2182	2		SWITCH-PUSHBUTTON 5-STA	28480	3101-2182
A2A1S6	3101-2610	1	1	SWITCH-PUSHBUTTON 6-STA	28480	3101-2610
A2A1S7	3101-2189	9	1	SWITCH-PUSHBUTTON DPDT 1-STA	28480	3101-2189
A2A1S8	3101-2391	5	1	SWITCH-PUSHBUTTON 2-STA	28480	3101-2391
A2A1VR1	1902-3005	6	2	DIODE-ZNR 2.43V 5% DO-7 PD=.4W TC=-.076%	28480	1902-3005
A2A1VR2	1902-3005	6		DIODE-ZNR 2.43V 5% DO-7 PD=.4W TC=-.076%	28480	1902-3005
A2A1XDS1	1200-0010	9	3	SOCKET-TUBE 2-CONT	28480	1200-0010
A2A1XDS2	1200-0010	9		SOCKET-TUBE 2-CONT	28480	1200-0010
A2A1XDS3	1200-0010	9		SOCKET-TUBE 2-CONT	28480	1200-0010
A2A2	08565-60003	3	1	FREQUENCY DISPLAY ASSEMBLY	28480	08565-60003
A2A2DS1	1990-0619	7	5	DISPLAY-NUM-SEG 1-CHAR .3-H	28480	5082-7613
A2A2DS2	1990-0619	7		DISPLAY-NUM-SEG 1-CHAR .3-H	28480	5082-7613
A2A2DS3	1990-0619	7		DISPLAY-NUM-SEG 1-CHAR .3-H	28480	5082-7613
A2A2DS4	1990-0619	7		DISPLAY-NUM-SEG 1-CHAR .3-H	28480	5082-7613
A2A2DS5	1990-0619	7		DISPLAY-NUM-SEG 1-CHAR .3-H	28480	5082-7613
A2A2J1	1200-0507	9	1	SOCKET-IC 16-CONT DIP-SLDR	28480	1200-0507
A2A2R1	0698-4037	0	8	RESISTOR 46.4 1% .125W F TC=0+-100	24546	C4-1/8-T0-46R4-F
A2A2R2	0698-4037	0		RESISTOR 46.4 1% .125W F TC=0+-100	24546	C4-1/8-T0-46R4-F
A2A2R3	0698-4037	0		RESISTOR 46.4 1% .125W F TC=0+-100	24546	C4-1/8-T0-46R4-F
A2A2R4	0698-4037	0		RESISTOR 46.4 1% .125W F TC=0+-100	24546	C4-1/8-T0-46R4-F
A2A2R5	0698-4037	0		RESISTOR 46.4 1% .125W F TC=0+-100	24546	C4-1/8-T0-46R4-F
A2A2R6	0698-4037	0		RESISTOR 46.4 1% .125W F TC=0+-100	24546	C4-1/8-T0-46R4-F
A2A2R7	0698-4037	0		RESISTOR 46.4 1% .125W F TC=0+-100	24546	C4-1/8-T0-46R4-F
A2A2R8	0698-4037	0		RESISTOR 46.4 1% .125W F TC=0+-100	24546	C4-1/8-T0-46R4-F
A2A2XDS1	1200-0508	0	5	SOCKET-IC 14-CONT DIP-SLDR	28480	1200-0508
A2A2XDS2	1200-0508	0		SOCKET-IC 14-CONT DIP-SLDR	28480	1200-0508
A2A2XDS3	1200-0508	0		SOCKET-IC 14-CONT DIP-SLDR	28480	1200-0508
A2A2XDS4	1200-0508	0		SOCKET-IC 14-CONT DIP-SLDR	28480	1200-0508
A2A2XDS5	1200-0508	0		SOCKET-IC 14-CONT DIP-SLDR	28480	1200-0508
A2A3	08565-60168	1	1	TUNING ASSEMBLY	28480	08565-60168
A2A3A1	08565-60175	0		TUNING INTERCONNECT	28480	08565-60175
A2A3A1J1	1251-7022	1	1	CONNECTOR 9-PIN M POST TYPE	28480	1251-7022
A2A3R1	2100-3621	3	1	RESISTOR-VAR PREC WW 10-TRN 10K 1%	28480	2100-3621
A2A3R2	2100-3615	5	1	RESISTOR-VAR PREC W/CP 10-TRN 10K 10%	28480	2100-3615
A2A3R3	2100-3726	9	1	RESISTOR-VAR PREC WW 5-TRN 20K 5%	28480	2100-3726
A2A3W1	08565-60176	1	1	CABLE ASSEMBLY-TUNING	28480	08565-60176
A2A4	08565-60004	4	1	REAR SWITCH ASSEMBLY	28480	08565-60004
A2A4J1	1251-4736	1		CONNECTOR 26-PIN M RECTANGULAR	28480	1251-4736
A2A4MP1	08565-00006	0		DETENT-SWEEP TIME	28480	08565-00006
A2A4MP2	08565-20055	1		BUSHING	28480	08565-20055
A2A4MP3	08565-20056	2		SHAFT-SWEEP TIME CONTROL (LONGER SHAFT)	28480	08565-20056
A2A4MP4	08565-20108	5		ROTOR-SWEEP TIME	28480	08565-20108
A2A4MP5	5020-0324	0		SHAFT-SWEEP TIME	28480	5020-0324
A2A4MP6	08559-20054	2		HUB DRIVE (SWEEP TIME)	28480	08559-20054
A2A4MP7	0380-0411	3		SPACER-RND .5-IN-LG .114-IN-ID	28480	0380-0411
A2A4MP8	0380-0411	3		SPACER-RND .5-IN-LG .114-IN-ID	28480	0380-0411
A2A4MP9	0510-0015	0		RETAINER-RING E-R EXT .125-IN-DIA STL	28480	0510-0015
A2A4MP10	1410-0006	8		BALL-BRG TYPE .1875-DIA GRADE-50 SST	78707	GRADE 50
A2A4MP11	1410-0730	5		BUSHING-PNL .127-ID .375-LG 1/4-28-THD	28480	1410-0730
A2A4MP12	1430-0555	4		GEAR-SPUR 48-T 48-DP 20-DEG-PA DLRN	6F689	1T2-Y4848
A2A4MP13	1430-0555	4		GEAR-SPUR 48-T 48-DP 20-DEG-PA DLRN	6F689	1T2-Y4848
A2A4MP14	1460-0578	4		SPRING-CPRSN .18-IN-OD .312-IN-OA-LG MUW	28480	1460-0578
A2A4MP15	2190-0016	3		WASHER-LK INTL T 3/8 IN .377-IN-ID	28480	2190-0016

See introduction to this section for ordering information
*Indicates factory selected value

Table 6-3. Replaceable Parts

Reference Designation	HP Part Number	C D	Qty	Description	Mfr Code	Mfr Part Number
A2A4MP16	2190-0019	6		WASHER-LK HLCL NO. 4 .115-IN-ID	28480	2190-0019
A2A4MP17	2190-0019	6		WASHER-LK HLCL NO. 4 .115-IN-ID	28480	2190-0019
A2A4MP18	2190-0368	8		WASHER-FL MTLC NO. 5 .13-IN-ID	28480	2190-0368
A2A4MP19	2200-0153	2		SCREW-MACH 4-40 .875-IN-LG PAN-HD-POZI	00000	ORDER BY DESCRIPTION
A2A4MP20	2200-0153	2		SCREW-MACH 4-40 .875-IN-LG PAN-HD-POZI	00000	ORDER BY DESCRIPTION
A2A4MP21	2260-0001	5		NUT-HEX-DBL-CHAM 4-40-THD .094-IN-THK	28480	2260-0001
A2A4MP22	2260-0001	5		NUT-HEX-DBL-CHAM 4-40-THD .094-IN-THK	28480	2260-0001
A2A4MP23	2950-0001	8		NUT-HEX-DBL-CHAM 3/8-32-THD .094-IN-THK	00000	ORDER BY DESCRIPTION
A2A4MP24	2950-0051	8		NUT-HEX-DBL-CHAM 1/4-28-THD .094-IN-THK	00000	ORDER BY DESCRIPTION
A2A4MP25	3030-0007	5		SCREW-SET 4-40 .125-IN-LG SMALL CUP-PT	00000	ORDER BY DESCRIPTION
A2A4MP26	3030-0007	5		SCREW-SET 4-40 .125-IN-LG SMALL CUP-PT	00000	ORDER BY DESCRIPTION
A2A4MP27	3050-0028	2		WASHER-FL MTLC NO. 12 .25-IN-ID	28480	3050-0028
A2A5	08565-60005	5	1	REFERENCE LEVEL ENCODER ASSEMBLY	28480	08565-60005
A2A5MP1	08654-20054	8	1	ROTOR ASSEMBLY	28480	08654-20054
A2A5MP2	08565-20058	4		HUB-ROTARY SWITCH	28480	08565-20058
A2A5MP3	3050-0161	4		WASHER-SPR WAVY 1/4 IN .265-IN-ID	28480	3050-0161
A2A5MP4	3050-0156	7		WASHER-FL MTLC NO. 12 .25-IN-ID	28480	3050-0156
A2A5MP5	3050-0156	7		WASHER-FL MTLC NO. 12 .25-IN-ID	28480	3050-0156
A2A5MP6	3050-0156	7		WASHER-FL MTLC NO. 12 .25-IN-ID	28480	3050-0156
A2A5MP7	0510-0005	8		RETAINER-RING BSC EXT .25-IN-DIA STL	28480	0510-0005

See introduction to this section for ordering information
*Indicates factory selected value

Table 6-3. Replaceable Parts

Reference Designation	HP Part Number	C D	Qty	Description	Mfr Code	Mfr Part Number
A3	08569-60002	6	1	DISPLAY ADJUST ASSEMBLY	28480	08569-60002
A3E1	0360-1788	7	2	CONNECTOR-SGL CONT PIN .045-IN-BSC-SZ SQ	28480	0360-1788
A3E2	0360-1788	7		CONNECTOR-SGL CONT PIN .045-IN-BSC-SZ SQ	28480	0360-1788
A3R1	2100-3795	2	1	RESISTOR-VAR CONTROL CP 1M 10% LIN	28480	2100-3795
A3R2	2100-3629	1	3	RESISTOR-VAR CONTROL CP 5K 10% LIN	28480	2100-3629
A3R3	2100-3629	1		RESISTOR-VAR CONTROL CP 5K 10% LIN	28480	2100-3629
A3R4	2100-3629	1		RESISTOR-VAR CONTROL CP 5K 10% LIN	28480	2100-3629
				A3 MISCELLANEOUS PARTS		
	0380-0810	6	1	STANDOFF-RVT-ON .437-IN-LG 6-32THD	00000	ORDER BY DESCRIPTION

See introduction to this section for ordering information
*Indicates factory selected value

Table 6-3. Replaceable Parts

Reference Designation	HP Part Number	C D	Qty	Description	Mfr Code	Mfr Part Number
A4	08569-60004	8	1	Z-AXIS ASSEMBLY	28480	08569-60004
A4C1	0160-4084	8	1	CAPACITOR-FXD .1UF +-20% 50VDC CER	28480	0160-4084
A4C2	0160-3665	9	2	CAPACITOR-FXD .01UF +80-20% 500VDC CER	28480	0160-3665
A4C3	0160-3665	9		CAPACITOR-FXD .01UF +80-20% 500VDC CER	28480	0160-3665
A4C4	0160-2055	9	15	CAPACITOR-FXD .01UF +80-20% 100VDC CER	28480	0160-2055
A4C5	0160-2308	5	1	CAPACITOR-FXD 36PF +-5% 300VDC MICA	28480	0160-2308
A4C6	0121-0059	7	1	CAPACITOR-V TRMR-CER 2-8PF 350V PC-MTG	52763	304324 2/8PF NPO
A4C7	0160-2055	9		CAPACITOR-FXD .01UF +80-20% 100VDC CER	28480	0160-2055
A4C8	0160-5214	8	6	CAPACITOR-FXD .1UF +-20% 500VDC CER	28480	0160-5214
A4C9	0160-5214	8		CAPACITOR-FXD .1UF +-20% 500VDC CER	28480	0160-5214
A4C10	0160-5214	8		CAPACITOR-FXD .1UF +-20% 500VDC CER	28480	0160-5214
A4C11	0160-5214	8		CAPACITOR-FXD .1UF +-20% 500VDC CER	28480	0160-5214
A4C12	0160-4791	4	1	CAPACITOR-FXD 10PF +-5% 100VDC CER 0+-30	28480	0160-4791
A4C13	0160-2055	9		CAPACITOR-FXD .01UF +80-20% 100VDC CER	28480	0160-2055
A4C14	0160-2204	0	1	CAPACITOR-FXD 100PF +-5% 300VDC MICA	28480	0160-2204
A4C15	0160-2238	0	1	CAPACITOR-FXD 1.5PF +-.25PF 500VDC CER	28480	0160-2238
A4C16	0160-2055	9		CAPACITOR-FXD .01UF +80-20% 100VDC CER	28480	0160-2055
A4C17	0160-5214	8		CAPACITOR-FXD .1UF +-20% 500VDC CER	28480	0160-5214
A4C18	0160-3875	3	1	CAPACITOR-FXD 22PF +-5% 200VDC CER 0+-30	28480	0160-3875
A4C19- A4C23				NOT ASSIGNED		
A4C24	0160-2055	9		CAPACITOR-FXD .01UF +80-20% 100VDC CER	28480	0160-2055
A4C25				NOT ASSIGNED		
A4C26	0160-5214	8		CAPACITOR-FXD .1UF +-20% 500VDC CER	28480	0160-5214
A4C27	0180-0374	3	2	CAPACITOR-FXD 10UF+-10% 20VDC TA	56289	150D106X9020B2
A4C28	0180-0197	8	1	CAPACITOR-FXD 2.2UF+-10% 20VDC TA	56289	150D225X9020A2
A4C29	0180-0374	3		CAPACITOR-FXD 10UF+-10% 20VDC TA	56289	150D106X9020B2
A4C30				NOT ASSIGNED		
A4C31				NOT ASSIGNED		
A4C32				NOT ASSIGNED		
A4C33	0160-2055	9		CAPACITOR-FXD .01UF +80-20% 100VDC CER	28480	0160-2055
A4C34	0160-2055	9		CAPACITOR-FXD .01UF +80-20% 100VDC CER	28480	0160-2055
A4C35	0160-2055	9		CAPACITOR-FXD .01UF +80-20% 100VDC CER	28480	0160-2055
A4C36	0160-2055	9		CAPACITOR-FXD .01UF +80-20% 100VDC CER	28480	0160-2055
A4C37	0160-2055	9		CAPACITOR-FXD .01UF +80-20% 100VDC CER	28480	0160-2055
A4C38	0160-2055	9		CAPACITOR-FXD .01UF +80-20% 100VDC CER	28480	0160-2055
A4C39	0160-2055	9		CAPACITOR-FXD .01UF +80-20% 100VDC CER	28480	0160-2055
A4C40	0160-2055	9		CAPACITOR-FXD .01UF +80-20% 100VDC CER	28480	0160-2055
A4C41	0160-2055	9		CAPACITOR-FXD .01UF +80-20% 100VDC CER	28480	0160-2055
A4C42	0160-2055	9		CAPACITOR-FXD .01UF +80-20% 100VDC CER	28480	0160-2055
A4C43	0140-0199	6	1	CAPACITOR-FXD 240PF +-5% 300VDC MICA	72136	DM15F241J0300WV1CR
A4CR1				NOT ASSIGNED		
A4CR2	1901-0050	3	10	DIODE-SWITCHING 80V 200MA 2NS DO-35	28480	1901-0050
A4CR3	1901-0050	3		DIODE-SWITCHING 80V 200MA 2NS DO-35	28480	1901-0050
A4CR4	1901-0028	5	4	DIODE-PWR RECT 400V 750MA DO-29	28480	1901-0028
A4CR5	1901-0096	7	2	DIODE-SWITCHING 120V 50MA 100NS	28480	1901-0096
A4CR6	1901-0028	5		DIODE-PWR RECT 400V 750MA DO-29	28480	1901-0028
A4CR7	1901-0050	3		DIODE-SWITCHING 80V 200MA 2NS DO-35	28480	1901-0050
A4CR8	1901-0050	3		DIODE-SWITCHING 80V 200MA 2NS DO-35	28480	1901-0050
A4CR9	1901-0028	5		DIODE-PWR RECT 400V 750MA DO-29	28480	1901-0028
A4CR10	1901-0096	7		DIODE-SWITCHING 120V 50MA 100NS	28480	1901-0096
A4CR11	1901-0028	5		DIODE-PWR RECT 400V 750MA DO-29	28480	1901-0028
A4CR12	1901-0050	3		DIODE-SWITCHING 80V 200MA 2NS DO-35	28480	1901-0050
A4CR13	1901-0518	8	1	DIODE-SM SIG SCHOTTKY	28480	1901-0518
A4CR14	1901-0050	3		DIODE-SWITCHING 80V 200MA 2NS DO-35	28480	1901-0050
A4CR15	1901-0050	3		DIODE-SWITCHING 80V 200MA 2NS DO-35	28480	1901-0050
A4CR16	1901-0050	3		DIODE-SWITCHING 80V 200MA 2NS DO-35	28480	1901-0050
A4CR17	1901-0050	3		DIODE-SWITCHING 80V 200MA 2NS DO-35	28480	1901-0050
A4CR18	1901-0050	3		DIODE-SWITCHING 80V 200MA 2NS DO-35	28480	1901-0050
A4L1	9140-0210	1	3	INDUCTOR RF-CH-MLD 100UH 5% .166DX.385LG	28480	9140-0210
A4L2	9140-0210	1		INDUCTOR RF-CH-MLD 100UH 5% .166DX.385LG	28480	9140-0210
A4L3	9140-0210	1		INDUCTOR RF-CH-MLD 100UH 5% .166DX.385LG	28480	9140-0210
A4L4	9100-1631	8	1	INDUCTOR RF-CH-MLD 56UH 5% .166DX.385LG	28480	9100-1631
A4Q1	1854-0019	3	3	TRANSISTOR NPN SI TO-18 PD=360MW	28480	1854-0019
A4Q2	1854-0404	0	7	TRANSISTOR NPN SI TO-18 PD=360MW	28480	1854-0404
A4Q3	1853-0036	2	2	TRANSISTOR PNP SI PD=310MW FT=250MHZ	28480	1853-0036
A4Q4	1854-0404	0		TRANSISTOR NPN SI TO-18 PD=360MW	28480	1854-0404
A4Q5	1853-0007	7	3	TRANSISTOR PNP 2N3251 SI TO-18 PD=360MW	04713	2N3251
A4Q6	1854-0404	0		TRANSISTOR NPN SI TO-18 PD=360MW	28480	1854-0404
A4Q7	1854-0404	0		TRANSISTOR NPN SI TO-18 PD=360MW	28480	1854-0404
A4Q8	1853-0007	7		TRANSISTOR PNP 2N3251 SI TO-18 PD=360MW	04713	2N3251
A4Q9	1853-0036	2		TRANSISTOR PNP SI PD=310MW FT=250MHZ	28480	1853-0036
A4Q10	1854-0404	0		TRANSISTOR NPN SI TO-18 PD=360MW	28480	1854-0404

See introduction to this section for ordering information
*Indicates factory selected value

Table 6-3. Replaceable Parts

Reference Designation	HP Part Number	C D	Qty	Description	Mfr Code	Mfr Part Number
A4Q11	1854-0404	0		TRANSISTOR NPN SI TO-18 PD=360MW	28480	1854-0404
A4Q12	1854-0477	7	1	TRANSISTOR NPN 2N2222A SI TO-18 PD=500MW	04713	2N2222A
A4Q13	1853-0038	4	2	TRANSISTOR PNP SI TO-39 PD=1W FT=100MHZ	28480	1853-0038
A4Q14	1854-0419	7	2	TRANSISTOR NPN SI TO-39 PD=1W FT=200MHZ	28480	1854-0419
A4Q15	1854-0419	7		TRANSISTOR NPN SI TO-39 PD=1W FT=200MHZ	28480	1854-0419
A4Q16	1853-0038	4		TRANSISTOR PNP SI TO-39 PD=1W FT=100MHZ	28480	1853-0038
A4Q17	1854-0404	0		TRANSISTOR NPN SI TO-18 PD=360MW	28480	1854-0404
A4Q18	1853-0007	7		TRANSISTOR PNP 2N3251 SI TO-18 PD=360MW	04713	2N3251
A4Q19	1854-0019	3		TRANSISTOR NPN SI TO-18 PD=360MW	28480	1854-0019
A4Q20	1854-0019	3		TRANSISTOR NPN SI TO-18 PD=360MW	28480	1854-0019
A4Q21	1854-0039	7	1	TRANSISTOR NPN 2N3053S SI TO-39 PD=1W	3L585	2N3053S
A4R1	0757-0280	3	6	RESISTOR 1K 1% .125W F TC=0+-100	24546	C4-1/8-T0-1001-F
A4R2	0757-0394	0	2	RESISTOR 51.1 1% .125W F TC=0+-100	24546	C4-1/8-T0-51R1-F
A4R3	0757-0200	7	2	RESISTOR 5.62K 1% .125W F TC=0+-100	24546	C4-1/8-T0-5621-F
A4R4	2100-3352	7	2	RESISTOR-TRMR 1K 10% C SIDE-ADJ 1-TRN	28480	2100-3352
A4R5	0698-0083	8	3	RESISTOR 1.96K 1% .125W F TC=0+-100	24546	C4-1/8-T0-1961-F
A4R6	0757-0200	7		RESISTOR 5.62K 1% .125W F TC=0+-100	24546	C4-1/8-T0-5621-F
A4R7	0757-0394	0		RESISTOR 51.1 1% .125W F TC=0+-100	24546	C4-1/8-T0-51R1-F
A4R8	0757-1094	9	1	RESISTOR 1.47K 1% .125W F TC=0+-100	24546	C4-1/8-T0-1471-F
A4R9	0698-0085	0	4	RESISTOR 2.61K 1% .125W F TC=0+-100	24546	C4-1/8-T0-2611-F
A4R10	0698-3447	4	1	RESISTOR 422 1% .125W F TC=0+-100	24546	C4-1/8-T0-422R-F
A4R11				NOT ASSIGNED		
A4R12	0698-0085	0		RESISTOR 2.61K 1% .125W F TC=0+-100	24546	C4-1/8-T0-2611-F
A4R13	0757-0280	3		RESISTOR 1K 1% .125W F TC=0+-100	24546	C4-1/8-T0-1001-F
A4R14				NOT ASSIGNED		
A4R15	0757-0462	3	1	RESISTOR 75K 1% .125W F TC=0+-100	24546	C4-1/8-T0-7502-F
A4R16	2100-3357	2	3	RESISTOR-TRMR 500K 10% C SIDE-ADJ 1-TRN	28480	2100-3357
A4R17	2100-3357	2		RESISTOR-TRMR 500K 10% C SIDE-ADJ 1-TRN	28480	2100-3357
A4R18				NOT ASSIGNED		
A4R19	0757-0274	5	2	RESISTOR 1.21K 1% .125W F TC=0+-100	24546	C4-1/8-T0-1211-F
A4R20	0698-3418	9	2	RESISTOR 26.1K 1% .5W F TC=0+-100	28480	0698-3418
A4R21	0698-3160	8	2	RESISTOR 31.6K 1% .125W F TC=0+-100	24546	C4-1/8-T0-3162-F
A4R22	0757-0346	2	4	RESISTOR 10 1% .125W F TC=0+-100	24546	C4-1/8-T0-10R0-F
A4R23	0764-0044	2	2	RESISTOR 8.2K 5% 2W MO TC=0+-200	28480	0764-0044
A4R24	0698-3420	3	2	RESISTOR 34.8K 1% .5W F TC=0+-100	28480	0698-3420
A4R25	0757-0841	2	2	RESISTOR 12.1K 1% .5W F TC=0+-100	28480	0757-0841
A4R26	2100-3207	1	2	RESISTOR-TRMR 5K 10% C SIDE-ADJ 1-TRN	28480	2100-3207
A4R27	0757-0290	5	1	RESISTOR 6.19K 1% .125W F TC=0+-100	19701	MF4C1/8-T0-6191-F
A4R28	0698-3152	8	4	RESISTOR 3.48K 1% .125W F TC=0+-100	24546	C4-1/8-T0-3481-F
A4R29	0757-0346	2		RESISTOR 10 1% .125W F TC=0+-100	24546	C4-1/8-T0-10R0-F
A4R30	2100-3274	2	1	RESISTOR-TRMR 10K 10% C SIDE-ADJ 1-TRN	28480	2100-3274
A4R31	0757-0418	9	1	RESISTOR 619 1% .125W F TC=0+-100	24546	C4-1/8-T0-619R-F
A4R32	0757-0401	0	1	RESISTOR 100 1% .125W F TC=0+-100	24546	C4-1/8-T0-101-F
A4R33	0757-0442	9	13	RESISTOR 10K 1% .125W F TC=0+-100	24546	C4-1/8-T0-1002-F
A4R34	0698-3157	3	1	RESISTOR 19.6K 1% .125W F TC=0+-100	24546	C4-1/8-T0-1962-F
A4R35				NOT ASSIGNED		
A4R36	0698-3418	9		RESISTOR 26.1K 1% .5W F TC=0+-100	28480	0698-3418
A4R37	0698-3160	8		RESISTOR 31.6K 1% .125W F TC=0+-100	24546	C4-1/8-T0-3162-F
A4R38	0757-0346	2		RESISTOR 10 1% .125W F TC=0+-100	24546	C4-1/8-T0-10R0-F
A4R39	0764-0044	2		RESISTOR 8.2K 5% 2W MO TC=0+-200	28480	0764-0044
A4R40	0698-3420	3		RESISTOR 34.8K 1% .5W F TC=0+-100	28480	0698-3420
A4R41	0757-0841	2		RESISTOR 12.1K 1% .5W F TC=0+-100	28480	0757-0841
A4R42	0757-0280	3		RESISTOR 1K 1% .125W F TC=0+-100	24546	C4-1/8-T0-1001-F
A4R43	0698-3162	0	1	RESISTOR 46.4K 1% .125W F TC=0+-100	24546	C4-1/8-T0-4642-F
A4R44	0698-3152	8		RESISTOR 3.48K 1% .125W F TC=0+-100	24546	C4-1/8-T0-3481-F
A4R45	0757-0346	2		RESISTOR 10 1% .125W F TC=0+-100	24546	C4-1/8-T0-10R0-F
A4R46	0757-0442	9		RESISTOR 10K 1% .125W F TC=0+-100	24546	C4-1/8-T0-1002-F
A4R47				NOT ASSIGNED		
A4R48	0757-0442	9		RESISTOR 10K 1% .125W F TC=0+-100	24546	C4-1/8-T0-1002-F
A4R49	0757-0442	9		RESISTOR 10K 1% .125W F TC=0+-100	24546	C4-1/8-T0-1002-F
A4R50	0757-0442	9		RESISTOR 10K 1% .125W F TC=0+-100	24546	C4-1/8-T0-1002-F
A4R51	0757-0442	9		RESISTOR 10K 1% .125W F TC=0+-100	24546	C4-1/8-T0-1002-F
A4R52	0698-0083	8		RESISTOR 1.96K 1% .125W F TC=0+-100	24546	C4-1/8-T0-1961-F
A4R53	0757-0442	9		RESISTOR 10K 1% .125W F TC=0+-100	24546	C4-1/8-T0-1002-F
A4R54	0757-0289	2	1	RESISTOR 13.3K 1% .125W F TC=0+-100	19701	MF4C1/8-T0-1332-F
A4R55	0757-0440	7	1	RESISTOR 7.5K 1% .125W F TC=0+-100	24546	C4-1/8-T0-7501-F
A4R56	0698-0085	0		RESISTOR 2.61K 1% .125W F TC=0+-100	24546	C4-1/8-T0-2611-F
A4R57	0698-0083	8		RESISTOR 1.96K 1% .125W F TC=0+-100	24546	C4-1/8-T0-1961-F
A4R58	0698-0085	0		RESISTOR 2.61K 1% .125W F TC=0+-100	24546	C4-1/8-T0-2611-F
A4R59	0757-0280	3		RESISTOR 1K 1% .125W F TC=0+-100	24546	C4-1/8-T0-1001-F
A4R60	2100-3350	5	1	RESISTOR-TRMR 200 10% C SIDE-ADJ 1-TRN	28480	2100-3350
A4R61	0757-0442	9		RESISTOR 10K 1% .125W F TC=0+-100	24546	C4-1/8-T0-1002-F
A4R62				NOT ASSIGNED		
A4R63	0698-3153	9	1	RESISTOR 3.83K 1% .125W F TC=0+-100	24546	C4-1/8-T0-3831-F
A4R64	0698-3152	8		RESISTOR 3.48K 1% .125W F TC=0+-100	24546	C4-1/8-T0-3481-F
A4R65				NOT ASSIGNED		

See introduction to this section for ordering information
*Indicates factory selected value

Table 6-3. Replaceable Parts

Reference Designation	HP Part Number	C D	Qty	Description	Mfr Code	Mfr Part Number
A4R66	0757-0442	9		RESISTOR 10K 1% .125W F TC=0+-100	24546	C4-1/8-T0-1002-F
A4R67	0757-0442	9		RESISTOR 10K 1% .125W F TC=0+-100	24546	C4-1/8-T0-1002-F
A4R68	0757-0280	3		RESISTOR 1K 1% .125W F TC=0+-100	24546	C4-1/8-T0-1001-F
A4R69	0757-0442	9		RESISTOR 10K 1% .125W F TC=0+-100	24546	C4-1/8-T0-1002-F
A4R70	0698-3152	8		RESISTOR 3.48K 1% .125W F TC=0+-100	24546	C4-1/8-T0-3481-F
A4R71	0757-0442	9		RESISTOR 10K 1% .125W F TC=0+-100	24546	C4-1/8-T0-1002-F
A4R72	0698-3438	3	1	RESISTOR 147 1% .125W F TC=0+-100	24546	C4-1/8-T0-147R-F
A4R73	0757-0442	9		RESISTOR 10K 1% .125W F TC=0+-100	24546	C4-1/8-T0-1002-F
A4R74	0757-0274	5		RESISTOR 1.21K 1% .125W F TC=0+-100	24546	C4-1/8-T0-1211-F
A4R75	0698-3151	7	1	RESISTOR 2.87K 1% .125W F TC=0+-100	24546	C4-1/8-T0-2871-F
A4R76	0757-0443	0	1	RESISTOR 11K 1% .125W F TC=0+-100	24546	C4-1/8-T0-1102-F
A4R77	2100-3207	1		RESISTOR-TRMR 5K 10% C SIDE-ADJ 1-TRN	28480	2100-3207
A4R78	0757-0419	0	1	RESISTOR 681 1% .125W F TC=0+-100	24546	C4-1/8-T0-681R-F
A4R79	0698-0082	7	1	RESISTOR 464 1% .125W F TC=0+-100	24546	C4-1/8-T0-4640-F
A4R80	0757-0280	3		RESISTOR 1K 1% .125W F TC=0+-100	24546	C4-1/8-T0-1001-F
A4R81	2100-3352	7		RESISTOR-TRMR 1K 10% C SIDE-ADJ 1-TRN	28480	2100-3352
A4R82	2100-3357	2		RESISTOR-TRMR 500K 10% C SIDE-ADJ 1-TRN	28480	2100-3357
A4TP1- A4TP5	0360-0535	0	5	TERMINAL TEST POINT PCB	00000	ORDER BY DESCRIPTION
A4U1	1820-1546	2	1	IC MULTIPLXR 4-CHAN-ANLG DUAL 16-DIP-C	04713	MC14052BCL
A4U2	1820-1197	9	2	IC GATE TTL LS NAND QUAD 2-INP	01295	SN74LS00N
A4U3	08569-80005	1	1	IC-EPROM, CHARACTERS	28480	08569-80005
A4U4	1858-0032	8	1	TRANSISTOR ARRAY 14-PIN PLSTC DIP	3L585	CA3146E
A4U5	1820-1285	6	1	IC GATE TTL LS AND-OR-INV 4-INP	01295	SN74LS54N
A4U6	1820-1210	7	1	IC GATE TTL LS AND-OR-INV DUAL 2-INP	01295	SN74LS51N
A4U7	1820-1199	1	1	IC INV TTL LS HEX 1-INP	01295	SN74LS04N
A4U8	1820-1975	1	2	IC SHF-RGTR TTL LS NEG-EDGE-TRIG PRL-IN	01295	SN74LS165N
A4U9	1820-1112	8	1	IC FF TTL LS D-TYPE POS-EDGE-TRIG	01295	SN74LS74AN
A4U10	1820-1197	9		IC GATE TTL LS NAND QUAD 2-INP	01295	SN74LS00N
A4U11	1820-1206	1	1	IC GATE TTL LS NOR TPL 3-INP	01295	SN74LS27N
A4U12	1820-1144	6	2	IC GATE TTL LS NOR QUAD 2-INP	01295	SN74LS02N
A4U13	1820-1144	6		IC GATE TTL LS NOR QUAD 2-INP	01295	SN74LS02N
A4U14	1820-1975	1		IC SHF-RGTR TTL LS NEG-EDGE-TRIG PRL-IN	01295	SN74LS165N
A4U15	1820-1730	6	1	IC FF TTL LS D-TYPE POS-EDGE-TRIG COM	01295	SN74LS273N
A4VR1	1902-0049	2	1	DIODE-ZNR 6.19V 5% DO-35 PD=.4W	28480	1902-0049
A4VR2				NOT ASSIGNED		
A4VR3	1902-3203	6	1	DIODE-ZNR 14.7V 5% DO-35 PD=.4W	28480	1902-3203
A4VR4	1902-3234	3	1	DIODE-ZNR 19.6V 5% DO-35 PD=.4W	28480	1902-3234
A4VR5	1902-0668	1	1	DIODE-ZNR 200V 5% DO-15 PD=1W TC=+.088%	28480	1902-0668
A4VR6	1902-3402	7	1	DIODE-ZNR 80.6V 2% DO-7 PD=.4W TC=+.081%	28480	1902-3402
				A4 MISCELLANEOUS PARTS		
	0403-0026	6	1	PLUG-HOLE BDR-HD FOR .187-D-HOLE NYL	02768	207-120241-03-0101
	1200-0185	9	5	INSULATOR-XSTR NYLON	28480	1200-0185
	1200-0689	8	1	SOCKET-IC 24-CONT DIP DIP-SLDR	28480	1200-0689
	1205-0095	0	4	HEAT SINK SGL TO-5/TO-39-CS	30161	3225B
	1480-0073	6	2	PIN-ROLL .062-IN-DIA .25-IN-LG BE-CU	28480	1480-0073
	4040-0752	9	2	EXTR-PC BD YEL POLYC .062-BD-THKNS	28480	4040-0752
	4330-0145	9	2	INSULATOR-BEAD GLASS	28480	4330-0145
	7121-1537	5	1	LABEL	28480	7121-1537

See introduction to this section for ordering information
*Indicates factory selected value

Table 6-3. Replaceable Parts

Reference Designation	HP Part Number	C D	Qty	Description	Mfr Code	Mfr Part Number
A5	08569-60048	0	1	X-Y AMPLIFIER ASSEMBLY	28480	08569-60048
A5C1	0160-2055	9	4	CAPACITOR-FXD .01UF +80-20% 100VDC CER	28480	0160-2055
A5C2	0160-2055	9		CAPACITOR-FXD .01UF +80-20% 100VDC CER	28480	0160-2055
A5C3	0140-0199	6	2	CAPACITOR-FXD 240PF +-5% 300VDC MICA	72136	DM15F241J0300WV1CR
A5C4	0160-3665	9	8	CAPACITOR-FXD .01UF +80-20% 500VDC CER	28480	0160-3665
A5C5	0160-2236	8	4	CAPACITOR-FXD 1PF +-.25PF 500VDC CER	28480	0160-2236
A5C6	0160-3665	9		CAPACITOR-FXD .01UF +80-20% 500VDC CER	28480	0160-3665
A5C7	0160-5214	8	6	CAPACITOR-FXD .1UF +-20% 500VDC CER	28480	0160-5214
A5C8	0160-3665	9		CAPACITOR-FXD .01UF +80-20% 500VDC CER	28480	0160-3665
A5C9	0160-2236	8		CAPACITOR-FXD 1PF +-.25PF 500VDC CER	28480	0160-2236
A5C10	0160-3665	9		CAPACITOR-FXD .01UF +80-20% 500VDC CER	28480	0160-3665
A5C11	0160-5214	8		CAPACITOR-FXD .1UF +-20% 500VDC CER	28480	0160-5214
A5C12	0160-2055	9		CAPACITOR-FXD .01UF +80-20% 100VDC CER	28480	0160-2055
A5C13	0160-2055	9		CAPACITOR-FXD .01UF +80-20% 100VDC CER	28480	0160-2055
A5C14	0140-0199	6		CAPACITOR-FXD 240PF +-5% 300VDC MICA	72136	DM15F241J0300WV1CR
A5C15	0160-3665	9		CAPACITOR-FXD .01UF +80-20% 500VDC CER	28480	0160-3665
A5C16	0160-2236	8		CAPACITOR-FXD 1PF +-.25PF 500VDC CER	28480	0160-2236
A5C17	0160-3665	9		CAPACITOR-FXD .01UF +80-20% 500VDC CER	28480	0160-3665
A5C18	0160-5214	8		CAPACITOR-FXD .1UF +-20% 500VDC CER	28480	0160-5214
A5C19	0160-3665	9		CAPACITOR-FXD .01UF +80-20% 500VDC CER	28480	0160-3665
A5C20	0160-2236	8		CAPACITOR-FXD 1PF +-.25PF 500VDC CER	28480	0160-2236
A5C21	0160-3665	9		CAPACITOR-FXD .01UF +80-20% 500VDC CER	28480	0160-3665
A5C22	0160-5214	8		CAPACITOR-FXD .1UF +-20% 500VDC CER	28480	0160-5214
A5C23	0160-5214	8		CAPACITOR-FXD .1UF +-20% 500VDC CER	28480	0160-5214
A5C24	0160-5214	8		CAPACITOR-FXD .1UF +-20% 500VDC CER	28480	0160-5214
A5C25	0180-0374	3	4	CAPACITOR-FXD 10UF+-10% 20VDC TA	56289	150D106X9020B2
A5C26	0160-4084	8	11	CAPACITOR-FXD .1UF +-20% 50VDC CER	28480	0160-4084
A5C27	0160-4084	8		CAPACITOR-FXD .1UF +-20% 50VDC CER	28480	0160-4084
A5C28	0180-0374	3		CAPACITOR-FXD 10UF+-10% 20VDC TA	56289	150D106X9020B2
A5C29	0160-4084	8		CAPACITOR-FXD .1UF +-20% 50VDC CER	28480	0160-4084
A5C30	0160-4084	8		CAPACITOR-FXD .1UF +-20% 50VDC CER	28480	0160-4084
A5C31	0180-0374	3		CAPACITOR-FXD 10UF+-10% 20VDC TA	56289	150D106X9020B2
A5C32	0160-4084	8		CAPACITOR-FXD .1UF +-20% 50VDC CER	28480	0160-4084
A5C33	0160-4084	8		CAPACITOR-FXD .1UF +-20% 50VDC CER	28480	0160-4084
A5C34	0180-0374	3		CAPACITOR-FXD 10UF+-10% 20VDC TA	56289	150D106X9020B2
A5C35	0160-4084	8		CAPACITOR-FXD .1UF +-20% 50VDC CER	28480	0160-4084
A5C36	0160-4084	8		CAPACITOR-FXD .1UF +-20% 50VDC CER	28480	0160-4084
A5C37				NOT ASSIGNED		
A5C38	0140-0191	8	1	CAPACITOR-FXD 56PF +-5% 300VDC MICA	72136	DM15E560J0300WV1CR
A5C39				NOT ASSIGNED		
A5C40	0160-2446	2	1	CAPACITOR-FXD .1UF +-20% 200VDC POLYSTY	84411	863UW10402W2
A5C41-A5C44				NOT ASSIGNED		
A5C45	0160-4084	8		CAPACITOR-FXD .1UF +-20% 50VDC CER	28480	0160-4084
A5C46	0160-4084	8		CAPACITOR-FXD .1UF +-20% 50VDC CER	28480	0160-4084
A5C47	0160-4084	8		CAPACITOR-FXD .1UF +-20% 50VDC CER	28480	0160-4084
A5C48	0160-0572	1	1	CAPACITOR-FXD 2200PF +-20% 100VDC CER	28480	0160-0572
A5CR1	1901-0050	3	9	DIODE-SWITCHING 80V 200MA 2NS DO-35	28480	1901-0050
A5CR2	1901-0050	3		DIODE-SWITCHING 80V 200MA 2NS DO-35	28480	1901-0050
A5CR3	1901-0050	3		DIODE-SWITCHING 80V 200MA 2NS DO-35	28480	1901-0050
A5CR4	1901-0050	3		DIODE-SWITCHING 80V 200MA 2NS DO-35	28480	1901-0050
A5CR5	1901-0050	3		DIODE-SWITCHING 80V 200MA 2NS DO-35	28480	1901-0050
A5CR6	1901-0050	3		DIODE-SWITCHING 80V 200MA 2NS DO-35	28480	1901-0050
A5CR7	1901-0050	3		DIODE-SWITCHING 80V 200MA 2NS DO-35	28480	1901-0050
A5CR8	1901-0050	3		DIODE-SWITCHING 80V 200MA 2NS DO-35	28480	1901-0050
A5CR9	1901-0050	3		DIODE-SWITCHING 80V 200MA 2NS DO-35	28480	1901-0050
A5CR10	1901-0376	6	1	DIODE-GEN PRP 35V 50MA DO-35	28480	1901-0376
A5CR11	1901-0028	5	8	DIODE-PWR RECT 400V 750MA DO-29	28480	1901-0028
A5CR12	1901-0096	7	4	DIODE-SWITCHING 120V 50MA 100NS	28480	1901-0096
A5CR13	1901-0028	5		DIODE-PWR RECT 400V 750MA DO-29	28480	1901-0028
A5CR14	1901-0028	5		DIODE-PWR RECT 400V 750MA DO-29	28480	1901-0028
A5CR15	1901-0096	7		DIODE-SWITCHING 120V 50MA 100NS	28480	1901-0096
A5CR16	1901-0028	5		DIODE-PWR RECT 400V 750MA DO-29	28480	1901-0028
A5CR17	1901-0028	5		DIODE-PWR RECT 400V 750MA DO-29	28480	1901-0028
A5CR18	1901-0096	7		DIODE-SWITCHING 120V 50MA 100NS	28480	1901-0096
A5CR19	1901-0028	5		DIODE-PWR RECT 400V 750MA DO-29	28480	1901-0028
A5CR20	1901-0028	5		DIODE-PWR RECT 400V 750MA DO-29	28480	1901-0028
A5CR21	1901-0096	7		DIODE-SWITCHING 120V 50MA 100NS	28480	1901-0096
A5CR22	1901-0028	5		DIODE-PWR RECT 400V 750MA DO-29	28480	1901-0028
A5E1	1251-0600	0	4	CONNECTOR-SGL CONT PIN 1.14-MM-BSC-SZ SQ	28480	1251-0600
A5E2	1251-0600	0		CONNECTOR-SGL CONT PIN 1.14-MM-BSC-SZ SQ	28480	1251-0600
A5E3	1251-0600	0		CONNECTOR-SGL CONT PIN 1.14-MM-BSC-SZ SQ	28480	1251-0600
A5E4	1251-0600	0		CONNECTOR-SGL CONT PIN 1.14-MM-BSC-SZ SQ	28480	1251-0600

See introduction to this section for ordering information
*Indicates factory selected value

Table 6-3. Replaceable Parts

Reference Designation	HP Part Number	C D	Qty	Description	Mfr Code	Mfr Part Number
A5L1	9140-0210	1	10	INDUCTOR RF-CH-MLD 100UH 5% .166DX.385LG	28480	9140-0210
A5L2	9140-0210	1		INDUCTOR RF-CH-MLD 100UH 5% .166DX.385LG	28480	9140-0210
A5L3	9140-0210	1		INDUCTOR RF-CH-MLD 100UH 5% .166DX.385LG	28480	9140-0210
A5L4	9140-0210	1		INDUCTOR RF-CH-MLD 100UH 5% .166DX.385LG	28480	9140-0210
A5L5	9140-0210	1		INDUCTOR RF-CH-MLD 100UH 5% .166DX.385LG	28480	9140-0210
A5L6	9140-0210	1		INDUCTOR RF-CH-MLD 100UH 5% .166DX.385LG	28480	9140-0210
A5L7	9140-0210	1		INDUCTOR RF-CH-MLD 100UH 5% .166DX.385LG	28480	9140-0210
A5L8	9140-0210	1		INDUCTOR RF-CH-MLD 100UH 5% .166DX.385LG	28480	9140-0210
A5L9	9140-0210	1		INDUCTOR RF-CH-MLD 100UH 5% .166DX.385LG	28480	9140-0210
A5L10	9140-0210	1		INDUCTOR RF-CH-MLD 100UH 5% .166DX.385LG	28480	9140-0210
A5MP1	1600-0441	8	1	STAMPING-BRS SHIED-AMPLIFIER	28480	1600-0441
A5MP2	1480-0073	6	4	PIN-ROLL .062-IN-DIA .25-IN-LG BE-CU	28480	1480-0073
A5MP3	1480-0073	6		PIN-ROLL .062-IN-DIA .25-IN-LG BE-CU	28480	1480-0073
A5MP3	4040-0753	0	2	EXTR-PC BD GRN POLYC .062-BD-THKNS	28480	4040-0753
A5MP4	6960-0079	5	1	PLUG-HOLE BDR-HD FOR .187-D-HOLE NYL	28480	6960-0079
A5MP7	1200-0173	5	8	INSULATOR-XSTR DAP-GL	28480	1200-0173
A5MP8	1205-0095	0	8	HEAT SINK SGL TO-5/TO-39-CS	30161	3225B
A5MP9	08569-20041	9	1	CABLE ASSY-X/Y AMP	28480	08569-20041
A5Q1	1853-0038	4	4	TRANSISTOR PNP SI TO-39 PD=1W FT=100MHZ	28480	1853-0038
A5Q2	1854-0404	0	8	TRANSISTOR NPN SI TO-18 PD=360MW	28480	1854-0404
A5Q3	1854-0404	0		TRANSISTOR NPN SI TO-18 PD=360MW	28480	1854-0404
A5Q4	1854-0523	4	4	TRANSISTOR NPN SI TO-39 PD=1W FT=150MHZ	28480	1854-0523
A5Q5	1853-0007	7	14	TRANSISTOR PNP 2N3251 SI TO-18 PD=360MW	04713	2N3251
A5Q6	1853-0007	7		TRANSISTOR PNP 2N3251 SI TO-18 PD=360MW	04713	2N3251
A5Q7	1854-0523	4		TRANSISTOR NPN SI TO-39 PD=1W FT=150MHZ	28480	1854-0523
A5Q8	1854-0404	0		TRANSISTOR NPN SI TO-18 PD=360MW	28480	1854-0404
A5Q9	1854-0404	0		TRANSISTOR NPN SI TO-18 PD=360MW	28480	1854-0404
A5Q10	1853-0038	4		TRANSISTOR PNP SI TO-39 PD=1W FT=100MHZ	28480	1853-0038
A5Q11	1854-0023	9	2	TRANSISTOR NPN SI TO-18 PD=360MW	28480	1854-0023
A5Q12	1854-0023	9		TRANSISTOR NPN SI TO-18 PD=360MW	28480	1854-0023
A5Q13	1853-0038	4		TRANSISTOR PNP SI TO-39 PD=1W FT=100MHZ	28480	1853-0038
A5Q14	1854-0404	0		TRANSISTOR NPN SI TO-18 PD=360MW	28480	1854-0404
A5Q15	1854-0404	0		TRANSISTOR NPN SI TO-18 PD=360MW	28480	1854-0404
A5Q16	1854-0523	4		TRANSISTOR NPN SI TO-39 PD=1W FT=150MHZ	28480	1854-0523
A5Q17	1853-0007	7		TRANSISTOR PNP 2N3251 SI TO-18 PD=360MW	04713	2N3251
A5Q18	1853-0007	7		TRANSISTOR PNP 2N3251 SI TO-18 PD=360MW	04713	2N3251
A5Q19	1854-0523	4		TRANSISTOR NPN SI TO-39 PD=1W FT=150MHZ	28480	1854-0523
A5Q20	1854-0404	0		TRANSISTOR NPN SI TO-18 PD=360MW	28480	1854-0404
A5Q21	1854-0404	0		TRANSISTOR NPN SI TO-18 PD=360MW	28480	1854-0404
A5Q22	1853-0038	4		TRANSISTOR PNP SI TO-39 PD=1W FT=100MHZ	28480	1853-0038
A5Q23	1853-0007	7		TRANSISTOR PNP 2N3251 SI TO-18 PD=360MW	04713	2N3251
A5Q24	1853-0007	7		TRANSISTOR PNP 2N3251 SI TO-18 PD=360MW	04713	2N3251
A5Q25	1853-0007	7		TRANSISTOR PNP 2N3251 SI TO-18 PD=360MW	04713	2N3251
A5Q26	1853-0007	7		TRANSISTOR PNP 2N3251 SI TO-18 PD=360MW	04713	2N3251
A5Q27	1853-0007	7		TRANSISTOR PNP 2N3251 SI TO-18 PD=360MW	04713	2N3251
A5Q28	1853-0034	0	2	TRANSISTOR PNP SI TO-18 PD=360MW	28480	1853-0034
A5Q29	1853-0007	7		TRANSISTOR PNP 2N3251 SI TO-18 PD=360MW	04713	2N3251
A5Q30	1853-0007	7		TRANSISTOR PNP 2N3251 SI TO-18 PD=360MW	04713	2N3251
A5Q31	1855-0420	2	2	TRANSISTOR J-FET 2N4391 N-CHAN D-MODE	01295	2N4391
A5Q32	1855-0420	2		TRANSISTOR J-FET 2N4391 N-CHAN D-MODE	01295	2N4391
A5Q33	1853-0007	7		TRANSISTOR PNP 2N3251 SI TO-18 PD=360MW	04713	2N3251
A5Q34	1853-0034	0		TRANSISTOR PNP SI TO-18 PD=360MW	28480	1853-0034
A5Q35	1853-0007	7		TRANSISTOR PNP 2N3251 SI TO-18 PD=360MW	04713	2N3251
A5Q36	1853-0007	7		TRANSISTOR PNP 2N3251 SI TO-18 PD=360MW	04713	2N3251
A5R1	0757-0289	2	2	RESISTOR 13.3K 1% .125W F TC=0+-100	19701	MF4C1/8-T0-1332-F
A5R2	0698-4442	1	1	RESISTOR 4.42K 1% .125W F TC=0+-100	24546	C4-1/8-T0-4421-F
A5R3	0757-0416	7	1	RESISTOR 511 1% .125W F TC=0+-100	24546	C4-1/8-T0-511R-F
A5R4	0757-0401	0	10	RESISTOR 100 1% .125W F TC=0+-100	24546	C4-1/8-T0-101-F
A5R5	0757-0440	7	5	RESISTOR 7.5K 1% .125W F TC=0+-100	24546	C4-1/8-T0-7501-F
A5R6	0757-0444	1	1	RESISTOR 12.1K 1% .125W F TC=0+-100	24546	C4-1/8-T0-1212-F
A5R7	0757-0394	0	4	RESISTOR 51.1 1% .125W F TC=0+-100	24546	C4-1/8-T0-51R1-F
A5R8	0757-0465	6	2	RESISTOR 100K 1% .125W F TC=0+-100	24546	C4-1/8-T0-1003-F
A5R9	0698-3150	6	2	RESISTOR 2.37K 1% .125W F TC=0+-100	24546	C4-1/8-T0-2371-F
A5R10	0698-3155	1	4	RESISTOR 4.64K 1% .125W F TC=0+-100	24546	C4-1/8-T0-4641-F
A5R11	0757-0278	9	2	RESISTOR 1.78K 1% .125W F TC=0+-100	24546	C4-1/8-T0-1781-F
A5R12	0757-0394	0		RESISTOR 51.1 1% .125W F TC=0+-100	24546	C4-1/8-T0-51R1-F
A5R13	0757-0440	7		RESISTOR 7.5K 1% .125W F TC=0+-100	24546	C4-1/8-T0-7501-F
A5R14	0757-0417	8	4	RESISTOR 562 1% .125W F TC=0+-100	24546	C4-1/8-T0-562R-F
A5R15	0757-0417	8		RESISTOR 562 1% .125W F TC=0+-100	24546	C4-1/8-T0-562R-F
A5R16	0698-0084	9	8	RESISTOR 2.15K 1% .125W F TC=0+-100	24546	C4-1/8-T0-2151-F
A5R17	0698-0084	9		RESISTOR 2.15K 1% .125W F TC=0+-100	24546	C4-1/8-T0-2151-F
A5R18	0698-3155	1		RESISTOR 4.64K 1% .125W F TC=0+-100	24546	C4-1/8-T0-4641-F
A5R19	0757-1094	9	2	RESISTOR 1.47K 1% .125W F TC=0+-100	24546	C4-1/8-T0-1471-F
A5R20	0698-0084	9		RESISTOR 2.15K 1% .125W F TC=0+-100	24546	C4-1/8-T0-2151-F

See introduction to this section for ordering information
*Indicates factory selected value

Table 6-3. Replaceable Parts

Reference Designation	HP Part Number	C D	Qty	Description	Mfr Code	Mfr Part Number
A5R21	0698-0084	9		RESISTOR 2.15K 1% .125W F TC=0+-100	24546	C4-1/8-T0-2151-F
A5R22	0757-0460	1	5	RESISTOR 61.9K 1% .125W F TC=0+-100	24546	C4-1/8-T0-6192-F
A5R23*	0757-0424	7	1	RESISTOR 1.1K 1% .125W F TC=0+-100	24546	C4-1/8-T0-1101-F
A5R24	0698-4433	0	4	RESISTOR 2.26K 1% .125W F TC=0+-100	24546	C4-1/8-T0-2261-F
A5R25	2100-3273	1	3	RESISTOR-TRMR 2K 10% C SIDE-ADJ 1-TRN	28480	2100-3273
A5R26	0698-4433	0		RESISTOR 2.26K 1% .125W F TC=0+-100	24546	C4-1/8-T0-2261-F
A5R27	0757-0460	1		RESISTOR 61.9K 1% .125W F TC=0+-100	24546	C4-1/8-T0-6192-F
A5R28	0757-0419	0	2	RESISTOR 681 1% .125W F TC=0+-100	24546	C4-1/8-T0-681R-F
A5R29	0757-0439	4	4	RESISTOR 6.81K 1% .125W F TC=0+-100	24546	C4-1/8-T0-6811-F
A5R30	0757-0438	3	4	RESISTOR 5.11K 1% .125W F TC=0+-100	24546	C4-1/8-T0-5111-F
A5R31	0698-3417	8	4	RESISTOR 23.7K 1% .5W F TC=0+-100	28480	0698-3417
A5R32	0757-0856	9	4	RESISTOR 75K 1% .5W F TC=0+-100	28480	0757-0856
A5R33	0757-0346	2	8	RESISTOR 10 1% .125W F TC=0+-100	24546	C4-1/8-T0-10R0-F
A5R34	0757-0346	2		RESISTOR 10 1% .125W F TC=0+-100	24546	C4-1/8-T0-10R0-F
A5R35	0698-3406	5	4	RESISTOR 1.33K 1% .5W F TC=0+-100	28480	0698-3406
A5R36	0757-0439	4		RESISTOR 6.81K 1% .125W F TC=0+-100	24546	C4-1/8-T0-6811-F
A5R37	0757-0438	3		RESISTOR 5.11K 1% .125W F TC=0+-100	24546	C4-1/8-T0-5111-F
A5R38	0698-3417	8		RESISTOR 23.7K 1% .5W F TC=0+-100	28480	0698-3417
A5R39	0757-0856	9		RESISTOR 75K 1% .5W F TC=0+-100	28480	0757-0856
A5R40	0757-0346	2		RESISTOR 10 1% .125W F TC=0+-100	24546	C4-1/8-T0-10R0-F
A5R41	0757-0346	2		RESISTOR 10 1% .125W F TC=0+-100	24546	C4-1/8-T0-10R0-F
A5R42	0698-3406	5		RESISTOR 1.33K 1% .5W F TC=0+-100	28480	0698-3406
A5R43	0757-0442	9	4	RESISTOR 10K 1% .125W F TC=0+-100	24546	C4-1/8-T0-1002-F
A5R44	0757-0442	9		RESISTOR 10K 1% .125W F TC=0+-100	24546	C4-1/8-T0-1002-F
A5R45	0757-0440	7		RESISTOR 7.5K 1% .125W F TC=0+-100	24546	C4-1/8-T0-7501-F
A5R46	0757-0394	0		RESISTOR 51.1 1% .125W F TC=0+-100	24546	C4-1/8-T0-51R1-F
A5R47	0757-0465	6		RESISTOR 100K 1% .125W F TC=0+-100	24546	C4-1/8-T0-1003-F
A5R48	0698-3150	6		RESISTOR 2.37K 1% .125W F TC=0+-100	24546	C4-1/8-T0-2371-F
A5R49	0698-3155	1		RESISTOR 4.64K 1% .125W F TC=0+-100	24546	C4-1/8-T0-4641-F
A5R50	0757-0278	9		RESISTOR 1.78K 1% .125W F TC=0+-100	24546	C4-1/8-T0-1781-F
A5R51	0757-0394	0		RESISTOR 51.1 1% .125W F TC=0+-100	24546	C4-1/8-T0-51R1-F
A5R52	0698-3136	8	1	RESISTOR 17.8K 1% .125W F TC=0+-100	24546	C4-1/8-T0-1782-F
A5R53	0757-0417	8		RESISTOR 562 1% .125W F TC=0+-100	24546	C4-1/8-T0-562R-F
A5R54	0757-0417	8		RESISTOR 562 1% .125W F TC=0+-100	24546	C4-1/8-T0-562R-F
A5R55	0698-0084	9		RESISTOR 2.15K 1% .125W F TC=0+-100	24546	C4-1/8-T0-2151-F
A5R56	0698-0084	9		RESISTOR 2.15K 1% .125W F TC=0+-100	24546	C4-1/8-T0-2151-F
A5R57	0698-3155	1		RESISTOR 4.64K 1% .125W F TC=0+-100	24546	C4-1/8-T0-4641-F
A5R58	0757-1094	9		RESISTOR 1.47K 1% .125W F TC=0+-100	24546	C4-1/8-T0-1471-F
A5R59	0698-0084	9		RESISTOR 2.15K 1% .125W F TC=0+-100	24546	C4-1/8-T0-2151-F
A5R60	0698-0084	9		RESISTOR 2.15K 1% .125W F TC=0+-100	24546	C4-1/8-T0-2151-F
A5R61	0757-0460	1		RESISTOR 61.9K 1% .125W F TC=0+-100	24546	C4-1/8-T0-6192-F
A5R62	0757-0317	7	1	RESISTOR 1.33K 1% .125W F TC=0+-100	24546	C4-1/8-T0-1331-F
A5R63	0698-4433	0		RESISTOR 2.26K 1% .125W F TC=0+-100	24546	C4-1/8-T0-2261-F
A5R64	2100-3273	1		RESISTOR-TRMR 2K 10% C SIDE-ADJ 1-TRN	28480	2100-3273
A5R65	0698-4433	0		RESISTOR 2.26K 1% .125W F TC=0+-100	24546	C4-1/8-T0-2261-F
A5R66	0757-0460	1		RESISTOR 61.9K 1% .125W F TC=0+-100	24546	C4-1/8-T0-6192-F
A5R67	0757-0419	0		RESISTOR 681 1% .125W F TC=0+-100	24546	C4-1/8-T0-681R-F
A5R68	0757-0439	4		RESISTOR 6.81K 1% .125W F TC=0+-100	24546	C4-1/8-T0-6811-F
A5R69	0757-0438	3		RESISTOR 5.11K 1% .125W F TC=0+-100	24546	C4-1/8-T0-5111-F
A5R70	0698-3417	8		RESISTOR 23.7K 1% .5W F TC=0+-100	28480	0698-3417
A5R71	0757-0856	9		RESISTOR 75K 1% .5W F TC=0+-100	28480	0757-0856
A5R72	0757-0346	2		RESISTOR 10 1% .125W F TC=0+-100	24546	C4-1/8-T0-10R0-F
A5R73	0757-0346	2		RESISTOR 10 1% .125W F TC=0+-100	24546	C4-1/8-T0-10R0-F
A5R74	0698-3406	5		RESISTOR 1.33K 1% .5W F TC=0+-100	28480	0698-3406
A5R75	0757-0439	4		RESISTOR 6.81K 1% .125W F TC=0+-100	24546	C4-1/8-T0-6811-F
A5R76	0757-0438	3		RESISTOR 5.11K 1% .125W F TC=0+-100	24546	C4-1/8-T0-5111-F
A5R77	0698-3417	8		RESISTOR 23.7K 1% .5W F TC=0+-100	28480	0698-3417
A5R78	0757-0856	9		RESISTOR 75K 1% .5W F TC=0+-100	28480	0757-0856
A5R79	0757-0346	2		RESISTOR 10 1% .125W F TC=0+-100	24546	C4-1/8-T0-10R0-F
A5R80	0757-0346	2		RESISTOR 10 1% .125W F TC=0+-100	24546	C4-1/8-T0-10R0-F
A5R81	0698-3406	5		RESISTOR 1.33K 1% .5W F TC=0+-100	28480	0698-3406
A5R82	0757-0401	0		RESISTOR 100 1% .125W F TC=0+-100	24546	C4-1/8-T0-101-F
A5R83	0757-0401	0		RESISTOR 100 1% .125W F TC=0+-100	24546	C4-1/8-T0-101-F
A5R84	0757-0401	0		RESISTOR 100 1% .125W F TC=0+-100	24546	C4-1/8-T0-101-F
A5R85	0757-0401	0		RESISTOR 100 1% .125W F TC=0+-100	24546	C4-1/8-T0-101-F
A5R86	0757-0401	0		RESISTOR 100 1% .125W F TC=0+-100	24546	C4-1/8-T0-101-F
A5R87	0757-0401	0		RESISTOR 100 1% .125W F TC=0+-100	24546	C4-1/8-T0-101-F
A5R88	0757-0401	0		RESISTOR 100 1% .125W F TC=0+-100	24546	C4-1/8-T0-101-F
A5R89	0757-0401	0		RESISTOR 100 1% .125W F TC=0+-100	24546	C4-1/8-T0-101-F
A5R90	0757-0460	1		RESISTOR 61.9K 1% .125W F TC=0+-100	24546	C4-1/8-T0-6192-F
A5R91	2100-1759	4	1	RESISTOR-TRMR 2K 5% WW SIDE-ADJ 1-TRN	28480	2100-1759
A5R92	0698-8826	3	2	RESISTOR 825K 1% .125W F TC=0+-100	28480	0698-8826
A5R93	0698-8826	3		RESISTOR 825K 1% .125W F TC=0+-100	28480	0698-8826
A5R94	0757-0458	7	2	RESISTOR 51.1K 1% .125W F TC=0+-100	24546	C4-1/8-T0-5112-F
A5R95	0757-0458	7		RESISTOR 51.1K 1% .125W F TC=0+-100	24546	C4-1/8-T0-5112-F

See introduction to this section for ordering information
*Indicates factory selected value

Table 6-3. Replaceable Parts

Reference Designation	HP Part Number	C D	Qty	Description	Mfr Code	Mfr Part Number
A5R96	0757-0401	0		RESISTOR 100 1% .125W F TC=0+-100	24546	C4-1/8-T0-101-F
A5R97	0757-0440	7		RESISTOR 7.5K 1% .125W F TC=0+-100	24546	C4-1/8-T0-7501-F
A5R98	0757-0442	9		RESISTOR 10K 1% .125W F TC=0+-100	24546	C4-1/8-T0-1002-F
A5R99	0757-0442	9		RESISTOR 10K 1% .125W F TC=0+-100	24546	C4-1/8-T0-1002-F
A5R100	2100-3273	1		RESISTOR-TRMR 2K 10% C SIDE-ADJ 1-TRN	28480	2100-3273
A5R101	0698-6360	6	2	RESISTOR 10K .1% .125W F TC=0+-25	28480	0698-6360
A5R102	0698-6360	6		RESISTOR 10K .1% .125W F TC=0+-25	28480	0698-6360
A5R103	0699-0272	9	1	RESISTOR 75K .1% .125W F TC=0+-25	28480	0699-0272
A5R104	0698-8894	5	1	RESISTOR 291K .1% .125W F TC=0+-25	28480	0698-8894
A5R105	0698-6620	1	1	RESISTOR 150K .1% .125W F TC=0+-25	28480	0698-6620
A5R106	0757-0440	7		RESISTOR 7.5K 1% .125W F TC=0+-100	24546	C4-1/8-T0-7501-F
A5R107	0757-0289	2		RESISTOR 13.3K 1% .125W F TC=0+-100	19701	MF4C1/8-T0-1332-F
A5R108	2100-3350	5	1	RESISTOR-TRMR 200 10% C SIDE-ADJ 1-TRN	28480	2100-3350
A5R109	0757-0422	5	1	RESISTOR 909 1% .125W F TC=0+-100	24546	C4-1/8-T0-909R-F
A5R110	0698-7242	5	1	RESISTOR 1.78K 1% .05W F TC=0+-100	24546	C3-1/8-T0-1781-F
A5R111	2100-3353	8	1	RESISTOR-TRMR 20K 10% C SIDE-ADJ 1-TRN	28480	2100-3353
A5R112	0757-0462	3	1	RESISTOR 75K 1% .125W F TC=0+-100	24546	C4-1/8-T0-7502-F
A5R113	2100-3351	6	1	RESISTOR-TRMR 500 10% C SIDE-ADJ 1-TRN	28480	2100-3351
A5R114	0757-0420	3	1	RESISTOR 750 1% .125W F TC=0+-100	24546	C4-1/8-T0-751-F
A5R115	0698-3157	3	2	RESISTOR 19.6K 1% .125W F TC=0+-100	24546	C4-1/8-T0-1962-F
A5R116	0698-3457	6	2	RESISTOR 316K 1% .125W F TC=0+-100	28480	0698-3457
A5R117	0698-3157	3		RESISTOR 19.6K 1% .125W F TC=0+-100	24546	C4-1/8-T0-1962-F
A5R118	0698-3457	6		RESISTOR 316K 1% .125W F TC=0+-100	28480	0698-3457
A5R119	0698-3151	7	1	RESISTOR 2.87K 1% .125W F TC=0+-100	24546	C4-1/8-T0-2871-F
A5TP1	0360-0535	0	7	TERMINAL TEST POINT PCB	00000	ORDER BY DESCRIPTION
A5TP2	0360-0535	0		TERMINAL TEST POINT PCB	00000	ORDER BY DESCRIPTION
A5TP3	0360-0535	0		TERMINAL TEST POINT PCB	00000	ORDER BY DESCRIPTION
A5TP4	0360-0535	0		TERMINAL TEST POINT PCB	00000	ORDER BY DESCRIPTION
A5TP5	0360-0535	0		TERMINAL TEST POINT PCB	00000	ORDER BY DESCRIPTION
A5TP6	0360-0535	0		TERMINAL TEST POINT PCB	00000	ORDER BY DESCRIPTION
A5TP7	0360-0535	0		TERMINAL TEST POINT PCB	00000	ORDER BY DESCRIPTION
A5U1	1826-0417	6	1	IC SWITCH ANLG QUAD 16-DIP-C PKG	27014	LF13333D
A5U2	1820-2257	4	1	IC BFR CMOS BUS DRVR HEX	04713	MC14503BCP
A5U3	1826-0092	3	1	IC OP AMP GP DUAL TO-99 PKG	28480	1826-0092
A5U4	1826-0458	5	1	IC OP AMP TO-99 PKG	27014	LF255H

HP CROSS
1826-1186
1826-[illegible]?

See introduction to this section for ordering information
*Indicates factory selected value

Table 6-3. Replaceable Parts

Reference Designation	HP Part Number	C D	Qty	Description	Mfr Code	Mfr Part Number
A6	08569-60005	9	1	HIGH VOLTAGE POWER SUPPLY ASSEMBLY	28480	08569-60005
A6C1	0180-0141	2	3	CAPACITOR-FXD 50UF+75-10% 50VDC AL	56289	30D506G050DD2
A6C2	0180-0141	2		CAPACITOR-FXD 50UF+75-10% 50VDC AL	56289	30D506G050DD2
A6C3	0180-0141	2		CAPACITOR-FXD 50UF+75-10% 50VDC AL	56289	30D506G050DD2
A6C4	0160-3665	9	2	CAPACITOR-FXD .01UF +80-20% 500VDC CER	28480	0160-3665
A6C5	0160-4297	5	2	CAPACITOR-FXD .022UF +80-20% 100VDC CER	56289	C023F101H223ZS22-CDH
A6C6	0160-4297	5		CAPACITOR-FXD .022UF +80-20% 100VDC CER	56289	C023F101H223ZS22-CDH
A6C7	0160-4084	8	1	CAPACITOR-FXD .1UF +-20% 50VDC CER	28480	0160-4084
A6C8	0170-0040	9	1	CAPACITOR-FXD .047UF +-10% 200VDC POLYE	56289	292P47392
A6C9	0160-4051	9	4	CAPACITOR-FXD .01UF +-20% 4KVDC	28480	0160-4051
A6C10	0160-4051	9		CAPACITOR-FXD .01UF +-20% 4KVDC	28480	0160-4051
A6C11	0160-0162	5	1	CAPACITOR-FXD .022UF +-10% 200VDC POLYE	28480	0160-0162
A6C12	0160-0684	6	4	CAPACITOR-FXD 1000PF +-20% 4KVDC	28480	0160-0684
A6C13	0180-0269	5	2	CAPACITOR-FXD 1UF+50-10% 150VDC AL	56289	30D105G150BA2
A6C14	0160-0684	6		CAPACITOR-FXD 1000PF +-20% 4KVDC	28480	0160-0684
A6C15	0160-4051	9		CAPACITOR-FXD .01UF +-20% 4KVDC	28480	0160-4051
A6C16	0180-0269	5		CAPACITOR-FXD 1UF+50-10% 150VDC AL	56289	30D105G150BA2
A6C17	0160-3665	9		CAPACITOR-FXD .01UF +80-20% 500VDC CER	28480	0160-3665
A6C18	0160-0684	6		CAPACITOR-FXD 1000PF +-20% 4KVDC	28480	0160-0684
A6C19	0160-0684	6		CAPACITOR-FXD 1000PF +-20% 4KVDC	28480	0160-0684
A6C20	0160-4051	9		CAPACITOR-FXD .01UF +-20% 4KVDC	28480	0160-4051
A6CR1	1901-0050	3	4	DIODE-SWITCHING 80V 200MA 2NS DO-35	28480	1901-0050
A6CR2	1901-0050	3		DIODE-SWITCHING 80V 200MA 2NS DO-35	28480	1901-0050
A6CR3	1901-0028	5	11	DIODE-PWR RECT 400V 750MA DO-29	28480	1901-0028
A6CR4	1901-0028	5		DIODE-PWR RECT 400V 750MA DO-29	28480	1901-0028
A6CR5	1901-0028	5		DIODE-PWR RECT 400V 750MA DO-29	28480	1901-0028
A6CR6	1901-0050	3		DIODE-SWITCHING 80V 200MA 2NS DO-35	28480	1901-0050
A6CR7	1901-0050	3		DIODE-SWITCHING 80V 200MA 2NS DO-35	28480	1901-0050
A6CR8	1901-0028	5		DIODE-PWR RECT 400V 750MA DO-29	28480	1901-0028
A6CR9	1901-0028	5		DIODE-PWR RECT 400V 750MA DO-29	28480	1901-0028
A6CR10	1901-0028	5		DIODE-PWR RECT 400V 750MA DO-29	28480	1901-0028
A6CR11	1901-0028	5		DIODE-PWR RECT 400V 750MA DO-29	28480	1901-0028
A6CR12	1901-0028	5		DIODE-PWR RECT 400V 750MA DO-29	28480	1901-0028
A6CR13	1901-0028	5		DIODE-PWR RECT 400V 750MA DO-29	28480	1901-0028
A6CR14	1901-0028	5		DIODE-PWR RECT 400V 750MA DO-29	28480	1901-0028
A6CR15	1901-0028	5		DIODE-PWR RECT 400V 750MA DO-29	28480	1901-0028
A6F1	2110-0001	8	1	FUSE 1A 250V NTD 1.25X.25 UL	75915	312001
A6J1				NOT ASSIGNED		
A6J2	1251-4682	6	1	CONNECTOR 3-PIN M POST TYPE	28480	1251-4682
A6J3	1251-4316	3	1	CONNECTOR 7-PIN M POST TYPE	28480	1251-4316
A6L1	9140-0171	3	2	INDUCTOR RF-CH-MLD 40UH 10% .296DX.968LG	28480	9140-0171
A6L2	9140-0171	3		INDUCTOR RF-CH-MLD 40UH 10% .296DX.968LG	28480	9140-0171
A6L3	9140-0129	1	1	INDUCTOR RF-CH-MLD 220UH 5% .166DX.385LG	28480	9140-0129
A6MP1	08569-00006	4	1	HEAT SINK-HIGH VOLTAGE	28480	08569-00006
A6Q1	1854-0518	7	1	TRANSISTOR NPN 2N5877 SI TO-3 PD=150W	04713	2N5877
A6Q2	1854-0404	0	1	TRANSISTOR NPN SI TO-18 PD=360MW	28480	1854-0404
A6Q3	1854-0361	8	1	TRANSISTOR NPN 2N4239 SI TO-5 PD=6W	04713	2N4239
A6R1	0757-0279	0	1	RESISTOR 3.16K 1% .125W F TC=0+-100	24546	C4-1/8-T0-3161-F
A6R2	0698-0084	9	1	RESISTOR 2.15K 1% .125W F TC=0+-100	24546	C4-1/8-T0-2151-F
A6R3	0757-0139	1	1	RESISTOR 1.1M 1% .5W F TC=0+-100	28480	0757-0139
A6R4	2100-3061	5	1	RESISTOR-TRMR 500K 10% C SIDE-ADJ 17-TRN	02111	43P504
A6R5	0757-0465	6	3	RESISTOR 100K 1% .125W F TC=0+-100	24546	C4-1/8-T0-1003-F
A6R6	0757-0465	6		RESISTOR 100K 1% .125W F TC=0+-100	24546	C4-1/8-T0-1003-F
A6R7	0683-2265	1	1	RESISTOR 22M 5% .25W FC TC=-900/+1200	01121	CB2265
A6R8	0757-0401	0	1	RESISTOR 100 1% .125W F TC=0+-100	24546	C4-1/8-T0-101-F
A6R9	0698-3162	0	1	RESISTOR 46.4K 1% .125W F TC=0+-100	24546	C4-1/8-T0-4642-F
A6R10	0698-3404	3	1	RESISTOR 383 1% .5W F TC=0+-100	28480	0698-3404
A6R11	0757-0280	3	1	RESISTOR 1K 1% .125W F TC=0+-100	24546	C4-1/8-T0-1001-F
A6R12	0698-8737	5	1	RESISTOR 100K 5% .25W CC TC=-400/+800	28480	0698-8737
A6R13	0699-0751	9	1	RESISTOR 5.6K 5% .25W CC TC=-400/+700	28480	0699-0751
A6R14	0699-0167	1	1	RESISTOR 20M 5% 1W C TC=0+-250	28480	0699-0167
A6R15	0687-3941	0	2	RESISTOR 390K 10% .5W CC TC=0+882	01121	EB3941
A6R16	0699-0743	9	8	RESISTOR 680 5% .25W CC TC=-400/+600	28480	0699-0743
A6R17	0698-3159	5	1	RESISTOR 26.1K 1% .125W F TC=0+-100	24546	C4-1/8-T0-2612-F
A6R18	2100-3054	6	1	RESISTOR-TRMR 50K 10% C SIDE-ADJ 17-TRN	02111	43P503
A6R19	0699-0743	9		RESISTOR 680 5% .25W CC TC=-400/+600	28480	0699-0743
A6R20	0699-0743	9		RESISTOR 680 5% .25W CC TC=-400/+600	28480	0699-0743
A6R21	0683-1065	7	2	RESISTOR 10M 5% .25W CC TC=-900/+1100	01121	CB1065
A6R22	0699-0743	9		RESISTOR 680 5% .25W CC TC=-400/+600	28480	0699-0743
A6R23	0698-8768	2	1	RESISTOR 100 5% .25W CC TC=-400/+500	28480	0698-8768
A6R24	0683-1005	5	2	RESISTOR 10 5% .25W FC TC=-400/+500	01121	CB1005
A6R25	0687-3941	0		RESISTOR 390K 10% .5W CC TC=0+882	01121	EB3941

See introduction to this section for ordering information
*Indicates factory selected value

Table 6-3. Replaceable Parts

Reference Designation	HP Part Number	C D	Qty	Description	Mfr Code	Mfr Part Number
A6R26	0699-0743	9		RESISTOR 680 5% .25W CC TC=-400/+600	28480	0699-0743
A6R27	0757-0465	6		RESISTOR 100K 1% .125W F TC=0+-100	24546	C4-1/8-T0-1003-F
A6R28	0699-0171	7	1	RESISTOR 6.5M 5% 1W C TC=0+—250	28480	0699-0171
A6R29	2100-3359	4	1	RESISTOR-TRMR 2M 20% C SIDE-ADJ 1-TRN	28480	2100-3359
A6R30	0699-0519	7	1	RESISTOR 12M 5% 1W C TC=0+—250	28480	0699-0519
A6R31	0699-0743	9		RESISTOR 680 5% .25W CC TC=-400/+600	28480	0699-0743
A6R32	0699-0743	9		RESISTOR 680 5% .25W CC TC=-400/+600	28480	0699-0743
A6R33	0683-1065	7		RESISTOR 10M 5% .25W CC TC=-900/+1100	01121	CB1065
A6R34	0699-0743	9		RESISTOR 680 5% .25W CC TC=-400/+600	28480	0699-0743
A6R35	0683-1005	5		RESISTOR 10 5% .25W FC TC=-400/+500	01121	CB1005
A6TP1				NOT ASSIGNED		
A6TP2	0360-0535	0	5	TERMINAL TEST POINT PCB	00000	ORDER BY DESCRIPTION
A6TP3	0360-0535	0		TERMINAL TEST POINT PCB	00000	ORDER BY DESCRIPTION
A6TP4	0360-0535	0		TERMINAL TEST POINT PCB	00000	ORDER BY DESCRIPTION
A6TP5	0360-0535	0		TERMINAL TEST POINT PCB	00000	ORDER BY DESCRIPTION
A6TP6	0360-0535	0		TERMINAL TEST POINT PCB	00000	ORDER BY DESCRIPTION
A6U1	1826-0167	3	1	IC OP AMP PRGMBL TO-99 PKG	3L585	CA3094AT
A6VR1	1902-0041	4	1	DIODE-ZNR 5.11V 5% DO-35 PD=.4W	28480	1902-0041
A6VR2	1902-3393	5	1	DIODE-ZNR 75V 5% DO-7 PD=.4W TC=+.077%	28480	1902-3393
A6VR3	2140-0018	0	2	LAMP-GLOW A9A-CT 90VDC 700UA T-2-BULB	00471	A9A-CT
A6VR4	2140-0018	0		LAMP-GLOW A9A-CT 90VDC 700UA T-2-BULB	00471	A9A-CT
A6VR5	1902-3394	6	1	DIODE-ZNR 75V 2% DO-7 PD=.4W TC=+.077%	28480	1902-3394
A6VR6	1902-0175	5	1	DIODE-ZNR 100V 5% PD=1W IR=5UA	28480	1902-0175
A6VR7	1902-0668	1	1	DIODE-ZNR 200V 5% DO-15 PD=1W TC=+.088%	28480	1902-0668
A6VR8	1902-0197	1	1	DIODE-ZNR 82V 5% PD=1W IR=5UA	28480	1902-0197
			1	A6 MISCELLANEOUS PARTS		
	1200-0043	8	1	INSULATOR-XSTR ALUMINUM	28480	1200-0043
	1200-0081	4	2	INSULATOR-FLG-BSHG NYLON	28480	1200-0081
	1200-0173	5	1	INSULATOR-XSTR DAP-GL	28480	1200-0173
	1205-0095	0	1	HEAT SINK SGL TO-5/TO-39-CS	30161	3225B
	1251-0600	0	5	CONNECTOR-SGL CONT PIN 1.14-MM-BSC-SZ SQ	28480	1251-0600
	1480-0073	6	2	PIN-ROLL .062-IN-DIA .25-IN-LG BE-CU	28480	1480-0073
	2110-0269	0	2	FUSEHOLDER-CLIP TYPE.25D-FUSE	28480	2110-0269
	2200-0111	2	2	SCREW-MACH 4-40 .5-IN-LG PAN-HD-POZI	00000	ORDER BY DESCRIPTION
	2260-0009	3	2	NUT-HEX-W/LKWR 4-40-THD .094-IN-THK	00000	ORDER BY DESCRIPTION
	2510-0299	4	1	SCREW-MACH 8-32 1.25-IN-LG PAN-HD-SLT	00000	ORDER BY DESCRIPTION
	2580-0012	6	1	NUT-HEX-DBL-CHAM 8-32-THD .125-IN-THK	00000	ORDER BY DESCRIPTION
	4040-0754	1	2	EXTR-PC BD BLU POLYC .062-BD-THKNS	28480	4040-0754
	6040-0454	0		THERMAL COMPOUND	28480	6040-0454
	08569-00010	0	1	COVER-HIGH VOLTAGE	28480	08569-00010
A6A1	08569-60080	0	1	TRANSFORMER ASSEMBLY-HIGH VOLTAGE	28480	08569-60080

See introduction to this section for ordering information
*Indicates factory selected value

Table 6-3. Replaceable Parts

Reference Designation	HP Part Number	C D	Qty	Description	Mfr Code	Mfr Part Number
A7	08569-60049	1	1	INPUT/OUTPUT ASSEMBLY	28480	08569-60049
A7C1	0160-2150	5	1	CAPACITOR-FXD 33PF +-5% 300VDC MICA	28480	0160-2150
A7C2	0160-4084	8	11	CAPACITOR-FXD .1UF +-20% 50VDC CER	28480	0160-4084
A7C3	0160-4084	8		CAPACITOR-FXD .1UF +-20% 50VDC CER	28480	0160-4084
A7C4	0160-4084	8		CAPACITOR-FXD .1UF +-20% 50VDC CER	28480	0160-4084
A7C5	0160-4084	8		CAPACITOR-FXD .1UF +-20% 50VDC CER	28480	0160-4084
A7C6	0160-4084	8		CAPACITOR-FXD .1UF +-20% 50VDC CER	28480	0160-4084
A7C7	0160-4084	8		CAPACITOR-FXD .1UF +-20% 50VDC CER	28480	0160-4084
A7C8	0160-4084	8		CAPACITOR-FXD .1UF +-20% 50VDC CER	28480	0160-4084
A7C9	0160-4084	8		CAPACITOR-FXD .1UF +-20% 50VDC CER	28480	0160-4084
A7C10	0160-4084	8		CAPACITOR-FXD .1UF +-20% 50VDC CER	28480	0160-4084
A7C11	0160-4084	8		CAPACITOR-FXD .1UF +-20% 50VDC CER	28480	0160-4084
A7C12	0160-4084	8		CAPACITOR-FXD .1UF +-20% 50VDC CER	28480	0160-4084
A7CR1- A7CR25	1901-0025	2	25	DIODE-GEN PRP 100V 200MA DO-7	28480	1901-0025
A7CR26	1901-0539	3	1	DIODE-SM SIG SCHOTTKY	28480	1901-0539
A7E1	1258-0124	7	4	PIN-PROGRAMING DUMPER .30 CONTACT	91506	8136-475G1
A7E2	1258-0124	7		PIN-PROGRAMING DUMPER .30 CONTACT	91506	8136-475G1
A7E3	1258-0124	7		PIN-PROGRAMING DUMPER .30 CONTACT	91506	8136-475G1
A7E4	1258-0124	7		PIN-PROGRAMING DUMPER .30 CONTACT	91506	8136-475G1
A7J1	1200-0507	9	2	SOCKET-IC 16-CONT DIP-SLDR	28480	1200-0507
A7J2	1200-0507	9		SOCKET-IC 16-CONT DIP-SLDR	28480	1200-0507
A7L1- A7L5	9100-2276	9	5	INDUCTOR RF-CH-MLD 100UH 10% .105DX.26LG	28480	9100-2276
A7Q1	1854-0477	7	3	TRANSISTOR NPN 2N2222A SI TO-18 PD=500MW	04713	2N2222A
A7Q2	1854-0477	7		TRANSISTOR NPN 2N2222A SI TO-18 PD=500MW	04713	2N2222A
A7Q3	1854-0477	7		TRANSISTOR NPN 2N2222A SI TO-18 PD=500MW	04713	2N2222A
A7Q4	1853-0281	9	1	TRANSISTOR PNP 2N2907A SI TO-18 PD=400MW	04713	2N2907A
A7Q5	1853-0451	5	1	TRANSISTOR PNP 2N3799 SI TO-18 PD=360MW	01295	2N3799
A7R1	0698-7205	0	2	RESISTOR 51.1 1% .05W F TC=0+-100	24546	C3-1/8-T0-51R1-F
A7R2	0698-7252	7	1	RESISTOR 4.64K 1% .05W F TC=0+-100	24546	C3-1/8-T0-4641-F
A7R3	0698-7188	8	1	RESISTOR 10 1% .05W F TC=0+-100	24546	C3-1/8-T0-10R-F
A7R4	0698-7205	0		RESISTOR 51.1 1% .05W F TC=0+-100	24546	C3-1/8-T0-51R1-F
A7R5	0698-7233	4	1	RESISTOR 750 1% .05W F TC=0+-100	24546	C3-1/8-T0-750R-F
A7R6	0698-7284	5	5	RESISTOR 100K 1% .05W F TC=0+-100	24546	C3-1/8-T0-1003-F
A7R7	0698-7272	1	1	RESISTOR 31.6K 1% .05W F TC=0+-100	24546	C3-1/8-T0-3162-F
A7R8	0698-0084	9	1	RESISTOR 2.15K 1% .125W F TC=0+-100	24546	C4-1/8-T0-2151-F
A7R9	0698-3458	7	2	RESISTOR 348K 1% .125W F TC=0+-100	28480	0698-3458
A7R10	0757-0461	2	2	RESISTOR 68.1K 1% .125W F TC=0+-100	24546	C4-1/8-T0-6812-F
A7R11	0698-3451	0	1	RESISTOR 133K 1% .125W F TC=0+-100	24546	C4-1/8-T0-1333-F
A7R12	0698-3157	3	13	RESISTOR 19.6K 1% .125W F TC=0+-100	24546	C4-1/8-T0-1962-F
A7R13	0698-3157	3		RESISTOR 19.6K 1% .125W F TC=0+-100	24546	C4-1/8-T0-1962-F
A7R14	0698-3157	3		RESISTOR 19.6K 1% .125W F TC=0+-100	24546	C4-1/8-T0-1962-F
A7R15	0698-3157	3		RESISTOR 19.6K 1% .125W F TC=0+-100	24546	C4-1/8-T0-1962-F
A7R16	0698-3458	7		RESISTOR 348K 1% .125W F TC=0+-100	28480	0698-3458
A7R17	0698-7280	1	3	RESISTOR 68.1K 1% .05W F TC=0+-100	24546	C3-1/8-T0-6812-F
A7R18	0698-7280	1		RESISTOR 68.1K 1% .05W F TC=0+-100	24546	C3-1/8-T0-6812-F
A7R19	0698-7270	9	1	RESISTOR 26.1K 1% .05W F TC=0+-100	24546	C3-1/8-T0-2612-F
A7R20	0698-7253	8	1	RESISTOR 5.11K 1% .05W F TC=0+-100	24546	C3-1/8-T0-5111-F
A7R21	0757-0464	5	4	RESISTOR 90.9K 1% .125W F TC=0+-100	24546	C4-1/8-T0-9092-F
A7R22	0698-3260	9	1	RESISTOR 464K 1% .125W F TC=0+-100	28480	0698-3260
A7R23	0757-0461	2		RESISTOR 68.1K 1% .125W F TC=0+-100	24546	C4-1/8-T0-6812-F
A7R24	0698-3154	0	8	RESISTOR 4.22K 1% .125W F TC=0+-100	24546	C4-1/8-T0-4221-F
A7R25	0698-3154	0		RESISTOR 4.22K 1% .125W F TC=0+-100	24546	C4-1/8-T0-4221-F
A7R26	0698-3154	0		RESISTOR 4.22K 1% .125W F TC=0+-100	24546	C4-1/8-T0-4221-F
A7R27	0698-3154	0		RESISTOR 4.22K 1% .125W F TC=0+-100	24546	C4-1/8-T0-4221-F
A7R28	0698-3154	0		RESISTOR 4.22K 1% .125W F TC=0+-100	24546	C4-1/8-T0-4221-F
A7R29	0698-7280	1		RESISTOR 68.1K 1% .05W F TC=0+-100	24546	C3-1/8-T0-6812-F
A7R30	0698-7284	5		RESISTOR 100K 1% .05W F TC=0+-100	24546	C3-1/8-T0-1003-F
A7R31	0757-0442	9	2	RESISTOR 10K 1% .125W F TC=0+-100	24546	C4-1/8-T0-1002-F
A7R32	0698-7267	4	7	RESISTOR 19.6K 1% .05W F TC=0+-100	24546	C3-1/8-T0-1962-F
A7R33	0698-3157	3		RESISTOR 19.6K 1% .125W F TC=0+-100	24546	C4-1/8-T0-1962-F
A7R34	0698-3157	3		RESISTOR 19.6K 1% .125W F TC=0+-100	24546	C4-1/8-T0-1962-F
A7R35	0698-7267	4		RESISTOR 19.6K 1% .05W F TC=0+-100	24546	C3-1/8-T0-1962-F
A7R36	0698-7267	4		RESISTOR 19.6K 1% .05W F TC=0+-100	24546	C3-1/8-T0-1962-F
A7R37	0698-3157	3		RESISTOR 19.6K 1% .125W F TC=0+-100	24546	C4-1/8-T0-1962-F
A7R38	0698-7267	4		RESISTOR 19.6K 1% .05W F TC=0+-100	24546	C3-1/8-T0-1962-F
A7R39	0698-3157	3		RESISTOR 19.6K 1% .125W F TC=0+-100	24546	C4-1/8-T0-1962-F
A7R40	0698-7267	4		RESISTOR 19.6K 1% .05W F TC=0+-100	24546	C3-1/8-T0-1962-F
A7R41	0698-7267	4		RESISTOR 19.6K 1% .05W F TC=0+-100	24546	C3-1/8-T0-1962-F
A7R42	0757-0439	4	4	RESISTOR 6.81K 1% .125W F TC=0+-100	24546	C4-1/8-T0-6811-F
A7R43	0757-0439	4		RESISTOR 6.81K 1% .125W F TC=0+-100	24546	C4-1/8-T0-6811-F
A7R44	0757-0439	4		RESISTOR 6.81K 1% .125W F TC=0+-100	24546	C4-1/8-T0-6811-F
A7R45	0757-0439	4		RESISTOR 6.81K 1% .125W F TC=0+-100	24546	C4-1/8-T0-6811-F

See introduction to this section for ordering information
*Indicates factory selected value

Table 6-3. Replaceable Parts

Reference Designation	HP Part Number	C D	Qty	Description	Mfr Code	Mfr Part Number
A7R46	0698-3154	0		RESISTOR 4.22K 1% .125W F TC=0+-100	24546	C4-1/8-T0-4221-F
A7R47	0698-3154	0		RESISTOR 4.22K 1% .125W F TC=0+-100	24546	C4-1/8-T0-4221-F
A7R48	0698-3154	0		RESISTOR 4.22K 1% .125W F TC=0+-100	24546	C4-1/8-T0-4221-F
A7R49	0757-0464	5		RESISTOR 90.9K 1% .125W F TC=0+-100	24546	C4-1/8-T0-9092-F
A7R50	0698-7288	9	3	RESISTOR 147K 1% .05W F TC=0+-100	24546	C3-1/8-T0-1473-F
A7R51	0698-3449	6	4	RESISTOR 28.7K 1% .125W F TC=0+-100	24546	C4-1/8-T0-2872-F
A7R52	0698-7285	6	2	RESISTOR 110K 1% .05W F TC=0+-100	24546	C3-1/8-T0-1103-F
A7R53	0698-7288	9		RESISTOR 147K 1% .05W F TC=0+-100	24546	C3-1/8-T0-1473-F
A7R54	0757-0464	5		RESISTOR 90.9K 1% .125W F TC=0+-100	24546	C4-1/8-T0-9092-F
A7R55	0698-3449	6		RESISTOR 28.7K 1% .125W F TC=0+-100	24546	C4-1/8-T0-2872-F
A7R56	0757-0466	7	1	RESISTOR 110K 1% .125W F TC=0+-100	24546	C4-1/8-T0-1103-F
A7R57	0698-7288	9		RESISTOR 147K 1% .05W F TC=0+-100	24546	C3-1/8-T0-1473-F
A7R58	0757-0464	5		RESISTOR 90.9K 1% .125W F TC=0+-100	24546	C4-1/8-T0-9092-F
A7R59	0698-3449	6		RESISTOR 28.7K 1% .125W F TC=0+-100	24546	C4-1/8-T0-2872-F
A7R60	0698-7285	6		RESISTOR 110K 1% .05W F TC=0+-100	24546	C3-1/8-T0-1103-F
A7R61	0698-3157	3		RESISTOR 19.6K 1% .125W F TC=0+-100	24546	C4-1/8-T0-1962-F
A7R62	0698-3157	3		RESISTOR 19.6K 1% .125W F TC=0+-100	24546	C4-1/8-T0-1962-F
A7R63	0698-3157	3		RESISTOR 19.6K 1% .125W F TC=0+-100	24546	C4-1/8-T0-1962-F
A7R64	0698-3157	3		RESISTOR 19.6K 1% .125W F TC=0+-100	24546	C4-1/8-T0-1962-F
A7R65	0698-7267	4		RESISTOR 19.6K 1% .05W F TC=0+-100	24546	C3-1/8-T0-1962-F
A7R66	0698-3157	3		RESISTOR 19.6K 1% .125W F TC=0+-100	24546	C4-1/8-T0-1962-F
A7R67	0698-3444	1	1	RESISTOR 316 1% .125W F TC=0+-100	24546	C4-1/8-T0-316R-F
A7R68	0757-0465	6	3	RESISTOR 100K 1% .125W F TC=0+-100	24546	C4-1/8-T0-1003-F
A7R69	0698-7284	5		RESISTOR 100K 1% .05W F TC=0+-100	24546	C3-1/8-T0-1003-F
A7R70	0698-7284	5		RESISTOR 100K 1% .05W F TC=0+-100	24546	C3-1/8-T0-1003-F
A7R71	0757-0465	6		RESISTOR 100K 1% .125W F TC=0+-100	24546	C4-1/8-T0-1003-F
A7R72	0698-7284	5		RESISTOR 100K 1% .05W F TC=0+-100	24546	C3-1/8-T0-1003-F
A7R73	0698-3449	6		RESISTOR 28.7K 1% .125W F TC=0+-100	24546	C4-1/8-T0-2872-F
A7R74	0757-0442	9		RESISTOR 10K 1% .125W F TC=0+-100	24546	C4-1/8-T0-1002-F
A7R75	0757-0465	6		RESISTOR 100K 1% .125W F TC=0+-100	24546	C4-1/8-T0-1003-F
A7TP1- A7TP4	0360-0077	5	4	TERMINAL-STUD SGL-TUR SWGFRM-MTG	28480	0360-0077
A7U1	1820-1550	8	1	IC GATE CMOS OR QUAD 2-INP	3L585	CD4071BF
A7U2	1820-2257	4	2	IC BFR CMOS BUS DRVR HEX	04713	MC14503BCP
A7U3	1820-1447	2	2	IC TTL LS 16-BIT STAT RAM 45-NS 3-S	01295	SN74LS670N
A7U4	1820-1447	2		IC TTL LS 16-BIT STAT RAM 45-NS 3-S	01295	SN74LS670N
A7U5	1820-1197	9	2	IC GATE TTL LS NAND QUAD 2-INP	01295	SN74LS00N
A7U6	1820-1199	1	1	IC INV TTL LS HEX 1-INP	01295	SN74LS04N
A7U7	1820-1216	3	3	IC DCDR TTL LS 3-TO-8-LINE 3-INP	01295	SN74LS138N
A7U8	1820-1491	6	9	IC BFR TTL LS NON-INV HEX 1-INP	01295	SN74LS367AN
A7U9	1810-0507	2	7	NETWORK-RES 8-SIP33.0K OHM X 7	11236	750-81-R33K
A7U10	1820-1907	9	1	IC GATE CMOS EXCL-NOR QUAD 2-INP	04713	MC14077BCL
A7U11	1810-0446	8	2	NETWORK-RES 8-SIP1.5K OHM X 7	11236	750-81-1.5K
A7U12	1820-1491	6		IC BFR TTL LS NON-INV HEX 1-INP	01295	SN74LS367AN
A7U13	1810-0507	2		NETWORK-RES 8-SIP33.0K OHM X 7	11236	750-81-R33K
A7U14	1820-1491	6		IC BFR TTL LS NON-INV HEX 1-INP	01295	SN74LS367AN
A7U15	1810-0446	8		NETWORK-RES 8-SIP1.5K OHM X 7	11236	750-81-1.5K
A7U16	1820-1491	6		IC BFR TTL LS NON-INV HEX 1-INP	01295	SN74LS367AN
A7U17	1810-0507	2		NETWORK-RES 8-SIP33.0K OHM X 7	11236	750-81-R33K
A7U18	1820-1491	6		IC BFR TTL LS NON-INV HEX 1-INP	01295	SN74LS367AN
A7U19	1810-0507	2		NETWORK-RES 8-SIP33.0K OHM X 7	11236	750-81-R33K
A7U20	1820-1491	6		IC BFR TTL LS NON-INV HEX 1-INP	01295	SN74LS367AN
A7U21	1810-0206	8	3	NETWORK-RES 8-SIP10.0K OHM X 7	01121	208A103
A7U22	1820-1917	1	2	IC BFR TTL LS LINE DRVR OCTL	01295	SN74LS240N
A7U23	1810-0206	8		NETWORK-RES 8-SIP10.0K OHM X 7	01121	208A103
A7U24	1820-1917	1		IC BFR TTL LS LINE DRVR OCTL	01295	SN74LS240N
A7U25	1810-0204	6	1	NETWORK-RES 8-SIP1.0K OHM X 7	01121	208A102
A7U26	1820-1491	6		IC BFR TTL LS NON-INV HEX 1-INP	01295	SN74LS367AN
A7U27	1810-0507	2		NETWORK-RES 8-SIP33.0K OHM X 7	11236	750-81-R33K
A7U28	1820-1491	6		IC BFR TTL LS NON-INV HEX 1-INP	01295	SN74LS367AN
A7U29	1810-0507	2		NETWORK-RES 8-SIP33.0K OHM X 7	11236	750-81-R33K
A7U30	1820-1491	6		IC BFR TTL LS NON-INV HEX 1-INP	01295	SN74LS367AN
A7U31	1820-2549	7	1	IC-8291A P HPIB	28480	1820-2549
A7U32	1820-2483	8	1	IC RCVR TTL LS BUS OCTL	01295	SN75161N
A7U33	1820-2257	4		IC BFR CMOS BUS DRVR HEX	04713	MC14503BCP
A7U34	1820-1216	3		IC DCDR TTL LS 3-TO-8-LINE 3-INP	01295	SN74LS138N
A7U35	1820-1216	3		IC DCDR TTL LS 3-TO-8-LINE 3-INP	01295	SN74LS138N
A7U36	1820-1729	3	1	IC LCH TTL LS COM CLEAR 8-BIT	01295	SN74LS259N
A7U37	1810-0507	2		NETWORK-RES 8-SIP33.0K OHM X 7	11236	750-81-R33K
A7U38	1810-0206	8		NETWORK-RES 8-SIP10.0K OHM X 7	01121	208A103
A7U39	1820-2485	0	1	IC RCVR TTL LS BUS OCTL	01295	SN75160N
A7U40	1820-1197	9		IC GATE TTL LS NAND QUAD 2-INP	01295	SN74LS00N
				A7 MISCELLANEOUS PARTS		
	0380-0336	1	1	SPACER-PC GUIDE FOR 1.312" CD SPCG	00000	ORDER BY DESCRIPTION
	1480-0073	6	2	PIN-ROLL .062-IN-DIA .25-IN-LG BE-CU	28480	1480-0073
	4040-0755	2	2	EXTR-PC BD VIO POLYC .062-BD-THKNS	28480	4040-0755
	6960-0016	0	1	PLUG-HOLE TR-HD FOR .125-D-HOLE NYL	28480	6960-0016

See introduction to this section for ordering information
*Indicates factory selected value

Table 6-3. Replaceable Parts

Reference Designation	HP Part Number	C D	Qty	Description	Mfr Code	Mfr Part Number
A8	08569-60058	2	1	MICROPROCESSOR ASSEMBLY	28480	08569-60058
A8C1	0180-0229	7	2	CAPACITOR-FXD 33UF+-10% 10VDC TA	56289	150D336X9010B2
A8C3	0180-0197	8	1	CAPACITOR-FXD 2.2UF+-10% 20VDC TA	56289	150D225X9020A2
A8C4	0160-4084	8	15	CAPACITOR-FXD .1UF +-20% 50VDC CER	28480	0160-4084
A8C5	0160-4084	8		CAPACITOR-FXD .1UF +-20% 50VDC CER	28480	0160-4084
A8C6	0160-4084	8		CAPACITOR-FXD .1UF +-20% 50VDC CER	28480	0160-4084
A8C7	0160-4084	8		CAPACITOR-FXD .1UF +-20% 50VDC CER	28480	0160-4084
A8C8	0160-4084	8		CAPACITOR-FXD .1UF +-20% 50VDC CER	28480	0160-4084
A8C9	0160-4084	8		CAPACITOR-FXD .1UF +-20% 50VDC CER	28480	0160-4084
A8C10	0160-4084	8		CAPACITOR-FXD .1UF +-20% 50VDC CER	28480	0160-4084
A8C11	0160-4084	8		CAPACITOR-FXD .1UF +-20% 50VDC CER	28480	0160-4084
A8C12	0160-4084	8		CAPACITOR-FXD .1UF +-20% 50VDC CER	28480	0160-4084
A8C13	0160-4084	8		CAPACITOR-FXD .1UF +-20% 50VDC CER	28480	0160-4084
A8C14	0160-4084	8		CAPACITOR-FXD .1UF +-20% 50VDC CER	28480	0160-4084
A8C15	0160-4084	8		CAPACITOR-FXD .1UF +-20% 50VDC CER	28480	0160-4084
A8C16	0160-4084	8		CAPACITOR-FXD .1UF +-20% 50VDC CER	28480	0160-4084
A8C17	0160-4084	8		CAPACITOR-FXD .1UF +-20% 50VDC CER	28480	0160-4084
A8C18	0160-4084	8		CAPACITOR-FXD .1UF +-20% 50VDC CER	28480	0160-4084
A8C19	0180-0229	7		CAPACITOR-FXD 33UF+-10% 10VDC TA	56289	150D336X9010B2
A8CR1	1901-0050	3	1	DIODE-SWITCHING 80V 200MA 2NS DO-35	28480	1901-0050
A8E1	1258-0177	0	1	JUMPER-PROGRAMMABLE (MALE)	28480	1258-0177
A8J1	1200-0812	9	1	SOCKET-DIP 16 CONTACT	28480	1200-0812
A8MP2	4040-0747	2	1	EXTRACTOR-PC BOARD (GRAY)	28480	4040-0747
A8MP3	1480-0073	6	1	PIN-ROLL .062-IN-DIA .25-IN-LG BE-CU	28480	1480-0073
A8R1	0757-0199	3	3	RESISTOR 21.5K 1% .125W F TC=0+-100	24546	C4-1/8-T0-2152-F
A8R2	0757-0199	3		RESISTOR 21.5K 1% .125W F TC=0+-100	24546	C4-1/8-T0-2152-F
A8R3	0757-0199	3		RESISTOR 21.5K 1% .125W F TC=0+-100	24546	C4-1/8-T0-2152-F
A8R4	0698-7219	6	1	RESISTOR 196 1% .05W F TC=0+-100	24546	C3-1/8-T0-196R-F
A8R5	0698-7260	7	4	RESISTOR 10K 1% .05W F TC=0+-100	24546	C3-1/8-T0-1002-F
A8R6	0698-7260	7		RESISTOR 10K 1% .05W F TC=0+-100	24546	C3-1/8-T0-1002-F
A8R7	0698-7276	5	1	RESISTOR 46.4K 1% .05W F TC=0+-100	24546	C3-1/8-T0-4642-F
A8R8	0698-7236	7	1	RESISTOR 1K 1% .05W F TC=0+-100	24546	C3-1/8-T0-1001-F
A8R9	0698-3260	9	1	RESISTOR 464K 1% .125W F TC=0+-100	28480	0698-3260
A8R10	0698-7260	7		RESISTOR 10K 1% .05W F TC=0+-100	24546	C3-1/8-T0-1002-F
A8R11	0698-7277	6	1	RESISTOR 51.1K 1% .05W F TC=0+-100	24546	C3-1/8-T0-5112-F
A8R12	0698-7260	7		RESISTOR 10K 1% .05W F TC=0+-100	24546	C3-1/8-T0-1002-F
A8R13	0698-7284	5	2	RESISTOR 100K 1% .05W F TC=0+-100	24546	C3-1/8-T0-1003-F
A8R14	0698-7284	5		RESISTOR 100K 1% .05W F TC=0+-100	24546	C3-1/8-T0-1003-F
A8R15	0698-7262	9	1	RESISTOR 12.1K 1% .05W F TC=0+-100	24546	C3-1/8-T0-1212-F
A8R16	0757-0180	2	1	RESISTOR 31.6 1% .125W F TC=0+-100	28480	0757-0180
A8TP1	0360-0535	0	11	TERMINAL TEST POINT PCB	00000	ORDER BY DESCRIPTION
A8TP2	0360-0535	0		TERMINAL TEST POINT PCB	00000	ORDER BY DESCRIPTION
A8TP3	0360-0535	0		TERMINAL TEST POINT PCB	00000	ORDER BY DESCRIPTION
A8TP4	0360-0535	0		TERMINAL TEST POINT PCB	00000	ORDER BY DESCRIPTION
A8TP5	0360-0535	0		TERMINAL TEST POINT PCB	00000	ORDER BY DESCRIPTION
A8TP6	0360-0535	0		TERMINAL TEST POINT PCB	00000	ORDER BY DESCRIPTION
A8TP7	0360-0535	0		TERMINAL TEST POINT PCB	00000	ORDER BY DESCRIPTION
A8TP8	0360-0535	0		TERMINAL TEST POINT PCB	00000	ORDER BY DESCRIPTION
A8TP9	0360-0535	0		TERMINAL TEST POINT PCB	00000	ORDER BY DESCRIPTION
A8TP10	0360-0535	0		TERMINAL TEST POINT PCB	00000	ORDER BY DESCRIPTION
A8TP11	0360-0535	0		TERMINAL TEST POINT PCB	00000	ORDER BY DESCRIPTION
A8U1	1820-2589	5	1	IC-6502B C MPU	28480	1820-2589
A8U2	1810-0207	9	1	N-R 22K 8 PINS	01121	208A223
A8U3	1820-2075	4	3	IC MISC TTL LS	01295	SN74LS245N
A8U4	1820-1438	1	5	IC MUXR/DATA-SEL TTL LS 2-TO-1-LINE QUAD	01295	SN74LS257AN
A8U5	1820-1438	1		IC MUXR/DATA-SEL TTL LS 2-TO-1-LINE QUAD	01295	SN74LS257AN
A8U6	1820-1112	8	2	IC FF TTL LS D-TYPE POS-EDGE-TRIG	01295	SN74LS74AN
A8U7	1820-1112	8		IC FF TTL LS D-TYPE POS-EDGE-TRIG	01295	SN74LS74AN
A8U8	8569-80010	3	1	IC-EPROM PROGRAM 1	28480	8569-80010
A8U9	1826-0138	8	1	IC COMPARATOR GP QUAD 14-DIP-P PKG	01295	LM339N
A8U10	1810-0206	8	1	N-R 10K 8 PINS	01121	208A103
A8U11	1820-1438	1		IC MUXR/DATA-SEL TTL LS 2-TO-1-LINE QUAD	01295	SN74LS257AN
A8U12	1818-0492	0	6	IC-RAM 1024 X 4	34649	P2114A-4
A8U13	1818-0492	0		IC-RAM 1024 X 4	34649	P2114A-4
A8U14	1820-1989	7	1	IC CNTR TTL LS BIN DUAL 4-BIT	07263	74LS393PC
A8U15	1820-1144	6	2	IC GATE TTL LS NOR QUAD 2-INP	01295	SN74LS02N
A8U16	1820-1435	8	2	IC CNTR TTL LS BIN UP/DOWN SYNCHRO	01295	SN74LS669N
A8U17	1820-1438	1		IC MUXR/DATA-SEL TTL LS 2-TO-1-LINE QUAD	01295	SN74LS257AN
A8U18	1818-0492	0		IC-RAM 1024 X 4	34649	P2114A-4
A8U19	1818-0492	0		IC-RAM 1024 X 4	34649	P2114A-4
A8U20	1820-1144	6		IC GATE TTL LS NOR QUAD 2-INP	01295	SN74LS02N

See introduction to this section for ordering information
*Indicates factory selected value

Table 6-3. Replaceable Parts

Reference Designation	HP Part Number	C D	Qty	Description	Mfr Code	Mfr Part Number
A8U21	1820-1211	8	1	IC GATE TTL LS EXCL-OR QUAD 2-INP	01295	SN74LS86N
A8U22	8569-80011	5	1	IC-EPROM PROGRAM 2	28480	8569-80011
A8U23	1820-1442	7	1	IC CNTR TTL LS DECD ASYNCHRO	01295	SN74LS290N
A8U24	1820-1917	1	1	IC BFR TTL LS LINE DRVR OCTL	01295	SN74LS240N
A8U25	1820-2075	4		IC MISC TTL LS	01295	SN74LS245N
A8U26	1818-0492	0		IC-RAM 1024 X 4	34649	P2114A-4
A8U27	1820-1435	8		IC CNTR TTL LS BIN UP/DOWN SYNCHRO	01295	SN74LS669N
A8U28	1820-1197	9	3	IC GATE TTL LS NAND QUAD 2-INP	01295	SN74LS00N
A8U29	8569-80012	7	1	IC-EPROM PROGRAM 3	28480	8569-80012
A8U30	1820-2024	3	1	IC DRVR TTL LS LINE DRVR OCTL	01295	SN74LS244N
A8U31	1820-1438	1		IC MUXR/DATA-SEL TTL LS 2-TO-1-LINE QUAD	01295	SN74LS257AN
A8U32	1820-2075	4		IC MISC TTL LS	01295	SN74LS245N
A8U33	1818-0492	0		IC-RAM 1024 X 4	34649	P2114A-4
A8U34	1820-1216	3	1	IC DCDR TTL LS 3-TO-8-LINE 3-INP	01295	SN74LS138N
A8U35	1820-1202	7	1	IC GATE TTL LS NAND TPL 3-INP	01295	SN74LS10N
A8U36	8569-80013	9	1	IC-EPROM PROGRAM 4	28480	8569-80013
A8U37	1820-1197	9		IC GATE TTL LS NAND QUAD 2-INP	01295	SN74LS00N
A8U38	1820-1281	2	1	IC DCDR TTL LS 2-TO-4-LINE DUAL 2-INP	01295	SN74LS139N
A8U39	1820-1197	9		IC GATE TTL LS NAND QUAD 2-INP	01295	SN74LS00N
A8U40	1813-0270	2	1	CRYSTAL-CLOCK-OSC.	28480	1813-0270
A8U41	1820-0629	0	1	IC FF TTL S J-K NEG-EDGE-TRIG	01295	SN74S112N
A8U42	1820-1208	3	1	IC GATE TTL LS OR QUAD 2-INP	01295	SN74LS32N
A8VR1	1902-3059	0	1	DIODE-ZNR 3.83V 5% DO-35 PD=.4W	28480	1902-3059
A8W1	8151-0013	4	1	WIRE 22AWG 1X22	28480	8151-0013
A8XU8	1200-0958	4	4	SOCKET-IC 24 CONTACT	28480	1200-0958
A8XU22	1200-0958	4		SOCKET-IC 24 CONTACT	28480	1200-0958
A8XU29	1200-0958	4		SOCKET-IC 24 CONTACT	28480	1200-0958
A8XU36	1200-0958	4		SOCKET-IC 24 CONTACT	28480	1200-0958
	7121-3793	9	1	LABEL IN 8569-X VA	28480	7121-3793
	7121-3794	0	1	LABEL IN 8569-X VA	28480	7121-3794
	7121-3795	1	1	LABEL IN 8569-X VA	28480	7121-3795
	7121-3796	2	1	LABEL IN 8569-X VA	28480	7121-3796

See introduction to this section for ordering information
*Indicates factory selected value

Table 6-3. Replaceable Parts

Reference Designation	HP Part Number	C D	Qty	Description	Mfr Code	Mfr Part Number
A9	08569-60072	0	1	DATA CONVERTER ASSEMBLY	28480	08569-60072
A9C1				NOT ASSIGNED		
A9C2	0160-4554	7	9	CAPACITOR-FXD .01UF +-20% 50VDC CER	28480	0160-4554
A9C3	0160-4554	7		CAPACITOR-FXD .01UF +-20% 50VDC CER	28480	0160-4554
A9C4	0160-2055	9	2	CAPACITOR-FXD .01UF +80-20% 100VDC CER	28480	0160-2055
A9C5	0160-4554	7		CAPACITOR-FXD .01UF +-20% 50VDC CER	28480	0160-4554
A9C6	0160-4554	7		CAPACITOR-FXD .01UF +-20% 50VDC CER	28480	0160-4554
A9C7	0160-4084	8	12	CAPACITOR-FXD .1UF +-20% 50VDC CER	28480	0160-4084
A9C8	0160-0945	2	2	CAPACITOR-FXD 910PF +-5% 100VDC MICA	28480	0160-0945
A9C10	0160-2055	9		CAPACITOR-FXD .01UF +80-20% 100VDC CER	28480	0160-2055
A9C12	0160-4835	7	7	CAPACITOR-FXD .1UF +-10% 50VDC CER	28480	0160-4835
A9C14	0160-4554	7		CAPACITOR-FXD .01UF +-20% 50VDC CER	28480	0160-4554
A9C15	0180-0197	8	2	CAPACITOR-FXD 2.2UF+-10% 20VDC TA	56289	150D225X9020A2
A9C16	0160-4554	7		CAPACITOR-FXD .01UF +-20% 50VDC CER	28480	0160-4554
A9C17	0160-4554	7		CAPACITOR-FXD .01UF +-20% 50VDC CER	28480	0160-4554
A9C18	0160-4554	7		CAPACITOR-FXD .01UF +-20% 50VDC CER	28480	0160-4554
A9C19	0160-4554	7		CAPACITOR-FXD .01UF +-20% 50VDC CER	28480	0160-4554
A9C20	0160-0945	2		CAPACITOR-FXD 910PF +-5% 100VDC MICA	28480	0160-0945
A9C22	0160-4835	7		CAPACITOR-FXD .1UF +-10% 50VDC CER	28480	0160-4835
A9C26	0160-4835	7		CAPACITOR-FXD .1UF +-10% 50VDC CER	28480	0160-4835
A9C27	0160-3879	7	5	CAPACITOR-FXD .01UF +-20% 100VDC CER	28480	0160-3879
A9C28	0160-4835	7		CAPACITOR-FXD .1UF +-10% 50VDC CER	28480	0160-4835
A9C29	0160-4084	8		CAPACITOR-FXD .1UF +-20% 50VDC CER	28480	0160-4084
A9C30	0160-4084	8		CAPACITOR-FXD .1UF +-20% 50VDC CER	28480	0160-4084
A9C32	0180-0197	8		CAPACITOR-FXD 2.2UF+-10% 20VDC TA	56289	150D225X9020A2
A9C36	0160-4835	7		CAPACITOR-FXD .1UF +-10% 50VDC CER	28480	0160-4835
A9C37	0140-0205	5	1	CAPACITOR-FXD 62PF +-5% 300VDC MICA	72136	DM15E620J0300WV1CR
A9C56	0160-3879	7		CAPACITOR-FXD .01UF +-20% 100VDC CER	28480	0160-3879
A9C57	0160-4084	8		CAPACITOR-FXD .1UF +-20% 50VDC CER	28480	0160-4084
A9C58	0160-3533	0	1	CAPACITOR-FXD 470PF +-5% 300VDC MICA	28480	0160-3533
A9C59	0160-4084	8		CAPACITOR-FXD .1UF +-20% 50VDC CER	28480	0160-4084
A9C60	0160-4084	8		CAPACITOR-FXD .1UF +-20% 50VDC CER	28480	0160-4084
A9C62	0160-0160	3	1	CAPACITOR-FXD 8200PF +-10% 200VDC POLYE	28480	0160-0160
A9C63	0160-4084	8		CAPACITOR-FXD .1UF +-20% 50VDC CER	28480	0160-4084
A9C64	0160-3879	7		CAPACITOR-FXD .01UF +-20% 100VDC CER	28480	0160-3879
A9C65	0160-4084	8		CAPACITOR-FXD .1UF +-20% 50VDC CER	28480	0160-4084
A9C66	0160-3879	7		CAPACITOR-FXD .01UF +-20% 100VDC CER	28480	0160-3879
A9C67	0160-2204	0	2	CAPACITOR-FXD 100PF +-5% 300VDC MICA	28480	0160-2204
A9C68	0160-2204	0		CAPACITOR-FXD 100PF +-5% 300VDC MICA	28480	0160-2204
A9C69	0160-4084	8		CAPACITOR-FXD .1UF +-20% 50VDC CER	28480	0160-4084
A9C70	0160-4835	7		CAPACITOR-FXD .1UF +-10% 50VDC CER	28480	0160-4835
A9C73	0160-4084	8		CAPACITOR-FXD .1UF +-20% 50VDC CER	28480	0160-4084
A9C74	0160-4084	8		CAPACITOR-FXD .1UF +-20% 50VDC CER	28480	0160-4084
A9C75	0160-3878	6	1	CAPACITOR-FXD 1000PF +-20% 100VDC CER	28480	0160-3878
A9C76	0160-4835	7		CAPACITOR-FXD .1UF +-10% 50VDC CER	28480	0160-4835
A9C77	0160-4084	8		CAPACITOR-FXD .1UF +-20% 50VDC CER	28480	0160-4084
A9C78	0160-3879	7		CAPACITOR-FXD .01UF +-20% 100VDC CER	28480	0160-3879
A9C79	0160-3875	3	1	CAPACITOR-FXD 22PF +-5% 200VDC CER 0+-30	28480	0160-3875
A9CR1	1901-0376	6	1	DIODE-GEN PRP 35V 50MA DO-35	28480	1901-0376
A9CR2	1901-0450	7	2	DIODE-SWITCHING 50V 100MA 10NS DO-7	28480	1901-0450
A9CR3	1901-0450	7		DIODE-SWITCHING 50V 100MA 10NS DO-7	28480	1901-0450
A9CR4	1901-0539	3	4	DIODE-SM SIG SCHOTTKY	28480	1901-0539
A9CR5	1901-0539	3		DIODE-SM SIG SCHOTTKY	28480	1901-0539
A9CR6	1901-0539	3		DIODE-SM SIG SCHOTTKY	28480	1901-0539
A9CR7	1901-0539	3		DIODE-SM SIG SCHOTTKY	28480	1901-0539
A9CR9	1901-0535	9	1	DIODE-SM SIG SCHOTTKY	28480	1901-0535
A9E1	9170-0016	8	1	CORE-SHIELDING BEAD	28480	9170-0016
A9J1	1250-0543	8	1	CONNECTOR-RF M SMB	28480	1250-0543
A9L1	9100-1620	5	1	INDUCTOR RF-CH-MLD 15UH 10% .166DX.385LG	28480	9100-1620
A9L2	9140-0210	1	3	INDUCTOR RF-CH-MLD 100UH 5% .166DX.385LG	28480	9140-0210
A9L3	9140-0210	1		INDUCTOR RF-CH-MLD 100UH 5% .166DX.385LG	28480	9140-0210
A9L4	9140-0210	1		INDUCTOR RF-CH-MLD 100UH 5% .166DX.385LG	28480	9140-0210
A9MP2	4040-0756	3	2	EXTRACTOR-PC BOARD (WHITE)	28480	4040-0756
A9MP3	1480-0073	6	2	PIN-ROLL .062-IN-DIA .25-IN-LG BE-CU	28480	1480-0073
A9Q1	1855-0050	4	2	TRANSISTOR-JFET DUAL N-CHAN D-MODE SI	28480	1855-0050
A9Q2	1855-0241	5	6	TRANSISTOR MOSFET N-CHAN E-MODE TO-72 SI	18324	SD215
A9Q3	1854-0404	0	2	TRANSISTOR NPN SI TO-18 PD=360MW	28480	1854-0404
A9Q4	1854-0809	9	2	TRANSISTOR NPN 2N2369A SI TO-18 PD=360MW	28480	1854-0809
A9Q5	1854-0475	5	3	TRANSISTOR-DUAL NPN PD=750MW	28480	1854-0475

See introduction to this section for ordering information
*Indicates factory selected value

Table 6-3. Replaceable Parts

Reference Designation	HP Part Number	C D	Qty	Description	Mfr Code	Mfr Part Number
A9Q6	1854-0475	5		TRANSISTOR-DUAL NPN PD=750MW	28480	1854-0475
A9Q7	1855-0241	5		TRANSISTOR MOSFET N-CHAN E-MODE TO-72 SI	18324	SD215
A9Q8	1854-0475	5		TRANSISTOR-DUAL NPN PD=750MW	28480	1854-0475
A9Q9	1853-0075	9	1	TRANSISTOR-DUAL PNP PD=400MW	28480	1853-0075
A9Q10	1854-0404	0		TRANSISTOR NPN SI TO-18 PD=360MW	28480	1854-0404
A9Q11	1855-0050	4		TRANSISTOR-JFET DUAL N-CHAN D-MODE SI	28480	1855-0050
A9Q12	1854-0809	9		TRANSISTOR NPN 2N2369A SI TO-18 PD=360MW	28480	1854-0809
A9Q13	1855-0241	5		TRANSISTOR MOSFET N-CHAN E-MODE TO-72 SI	18324	SD215
A9Q14	1855-0241	5		TRANSISTOR MOSFET N-CHAN E-MODE TO-72 SI	18324	SD215
A9Q15	1855-0241	5		TRANSISTOR MOSFET N-CHAN E-MODE TO-72 SI	18324	SD215
A9Q16	1855-0241	5		TRANSISTOR MOSFET N-CHAN E-MODE TO-72 SI	18324	SD215
A9R1	0698-3438	3	1	RESISTOR 147 1% .125W F TC=0+-100	24546	C4-1/8-T0-147R-F
A9R2	0757-0442	9	5	RESISTOR 10K 1% .125W F TC=0+-100	24546	C4-1/8-T0-1002-F
A9R3	0757-0438	3	4	RESISTOR 5.11K 1% .125W F TC=0+-100	24546	C4-1/8-T0-5111-F
A9R4	0757-0442	9		RESISTOR 10K 1% .125W F TC=0+-100	24546	C4-1/8-T0-1002-F
A9R5	0757-0274	5	1	RESISTOR 1.21K 1% .125W F TC=0+-100	24546	C4-1/8-T0-1211-F
A9R6	0698-3440	7	1	RESISTOR 196 1% .125W F TC=0+-100	24546	C4-1/8-T0-196R-F
A9R7	0698-3160	8	1	RESISTOR 31.6K 1% .125W F TC=0+-100	24546	C4-1/8-T0-3162-F
A9R8	2100-3353	8	2	RESISTOR-TRMR 20K 10% C SIDE-ADJ 1-TRN	28480	2100-3353
A9R9	0757-0346	2	2	RESISTOR 10 1% .125W F TC=0+-100	24546	C4-1/8-T0-10R0-F
A9R10	0757-0280	3	4	RESISTOR 1K 1% .125W F TC=0+-100	24546	C4-1/8-T0-1001-F
A9R11	0757-0200	7	2	RESISTOR 5.62K 1% .125W F TC=0+-100	24546	C4-1/8-T0-5621-F
A9R12	0757-0290	5	2	RESISTOR 6.19K 1% .125W F TC=0+-100	19701	MF4C1/8-T0-6191-F
A9R13	0757-0279	0	1	RESISTOR 3.16K 1% .125W F TC=0+-100	24546	C4-1/8-T0-3161-F
A9R14	2100-3352	7	1	RESISTOR-TRMR 1K 10% C SIDE-ADJ 1-TRN	28480	2100-3352
A9R15	0757-0443	0	1	RESISTOR 11K 1% .125W F TC=0+-100	24546	C4-1/8-T0-1102-F
A9R17	0757-0280	3		RESISTOR 1K 1% .125W F TC=0+-100	24546	C4-1/8-T0-1001-F
A9R18	0757-0440	7	2	RESISTOR 7.5K 1% .125W F TC=0+-100	24546	C4-1/8-T0-7501-F
A9R19	0698-3157	3	3	RESISTOR 19.6K 1% .125W F TC=0+-100	24546	C4-1/8-T0-1962-F
A9R20	0757-0289	2	1	RESISTOR 13.3K 1% .125W F TC=0+-100	19701	MF4C1/8-T0-1332-F
A9R21	0698-3157	3		RESISTOR 19.6K 1% .125W F TC=0+-100	24546	C4-1/8-T0-1962-F
A9R22	0757-0462	3	1	RESISTOR 75K 1% .125W F TC=0+-100	24546	C4-1/8-T0-7502-F
A9R23	2100-3353	8		RESISTOR-TRMR 20K 10% C SIDE-ADJ 1-TRN	28480	2100-3353
A9R24	0757-0422	5	1	RESISTOR 909 1% .125W F TC=0+-100	24546	C4-1/8-T0-909R-F
A9R25	0757-0416	7	1	RESISTOR 511 1% .125W F TC=0+-100	24546	C4-1/8-T0-511R-F
A9R26	0757-0200	7		RESISTOR 5.62K 1% .125W F TC=0+-100	24546	C4-1/8-T0-5621-F
A9R27	0757-0290	5		RESISTOR 6.19K 1% .125W F TC=0+-100	19701	MF4C1/8-T0-6191-F
A9R28	0757-1094	9	1	RESISTOR 1.47K 1% .125W F TC=0+-100	24546	C4-1/8-T0-1471-F
A9R29	2100-3350	5	3	RESISTOR-TRMR 200 10% C SIDE-ADJ 1-TRN	28480	2100-3350
A9R30	0757-0288	1	1	RESISTOR 9.09K 1% .125W F TC=0+-100	19701	MF4C1/8-T0-9091-F
A9R41	0698-0083	8	4	RESISTOR 1.96K 1% .125W F TC=0+-100	24546	C4-1/8-T0-1961-F
A9R42	0757-0465	6	1	RESISTOR 100K 1% .125W F TC=0+-100	24546	C4-1/8-T0-1003-F
A9R44	0757-0438	3		RESISTOR 5.11K 1% .125W F TC=0+-100	24546	C4-1/8-T0-5111-F
A9R45	2100-3273	1	2	RESISTOR-TRMR 2K 10% C SIDE-ADJ 1-TRN	28480	2100-3273
A9R46	0698-3155	1	1	RESISTOR 4.64K 1% .125W F TC=0+-100	24546	C4-1/8-T0-4641-F
A9R47	2100-3350	5		RESISTOR-TRMR 200 10% C SIDE-ADJ 1-TRN	28480	2100-3350
A9R48	0698-3447	4	1	RESISTOR 422 1% .125W F TC=0+-100	24546	C4-1/8-T0-422R-F
A9R49	0698-3154	0	1	RESISTOR 4.22K 1% .125W F TC=0+-100	24546	C4-1/8-T0-4221-F
A9R50	0757-0440	7		RESISTOR 7.5K 1% .125W F TC=0+-100	24546	C4-1/8-T0-7501-F
A9R51	0698-7240	3	1	RESISTOR 1.47K 1% .05W F TC=0+-100	24546	C3-1/8-T0-1471-F
A9R52	0757-0180	2	1	RESISTOR 31.6 1% .125W F TC=0+-100	28480	0757-0180
A9R53	0757-0280	3		RESISTOR 1K 1% .125W F TC=0+-100	24546	C4-1/8-T0-1001-F
A9R54	0757-0280	3		RESISTOR 1K 1% .125W F TC=0+-100	24546	C4-1/8-T0-1001-F
A9R55	0757-0401	0	1	RESISTOR 100 1% .125W F TC=0+-100	24546	C4-1/8-T0-101-F
A9R59	2100-3350	5		RESISTOR-TRMR 200 10% C SIDE-ADJ 1-TRN	28480	2100-3350
A9R60	0757-0418	9	1	RESISTOR 619 1% .125W F TC=0+-100	24546	C4-1/8-T0-619R-F
A9R61	0698-0083	8		RESISTOR 1.96K 1% .125W F TC=0+-100	24546	C4-1/8-T0-1961-F
A9R62	2100-3273	1		RESISTOR-TRMR 2K 10% C SIDE-ADJ 1-TRN	28480	2100-3273
A9R63	0698-0083	8		RESISTOR 1.96K 1% .125W F TC=0+-100	24546	C4-1/8-T0-1961-F
A9R65	0698-3152	8		RESISTOR 3.48K 1% .125W F TC=0+-100	24546	C4-1/8-T0-3481-F
A9R65	0698-3152	8	2	RESISTOR 3.48K 1% .125W F TC=0+-100	24546	C4-1/8-T0-3481-F
A9R66	0698-0083	8		RESISTOR 1.96K 1% .125W F TC=0+-100	24546	C4-1/8-T0-1961-F
A9R67	0757-0438	3		RESISTOR 5.11K 1% .125W F TC=0+-100	24546	C4-1/8-T0-5111-F
A9R68	0698-3151	7	2	RESISTOR 2.87K 1% .125W F TC=0+-100	24546	C4-1/8-T0-2871-F
A9R69	0698-3151	7		RESISTOR 2.87K 1% .125W F TC=0+-100	24546	C4-1/8-T0-2871-F
A9R70	0757-0438	3		RESISTOR 5.11K 1% .125W F TC=0+-100	24546	C4-1/8-T0-5111-F
A9R72	0757-0420	3	1	RESISTOR 750 1% .125W F TC=0+-100	24546	C4-1/8-T0-751-F
A9R73	0757-0442	9		RESISTOR 10K 1% .125W F TC=0+-100	24546	C4-1/8-T0-1002-F
A9R74	0698-3157	3		RESISTOR 19.6K 1% .125W F TC=0+-100	24546	C4-1/8-T0-1962-F
A9R76	0698-3442	9	1	RESISTOR 237 1% .125W F TC=0+-100	24546	C4-1/8-T0-237R-F
A9R78	0757-0346	2		RESISTOR 10 1% .125W F TC=0+-100	24546	C4-1/8-T0-10R0-F
A9R79	0757-0442	9		RESISTOR 10K 1% .125W F TC=0+-100	24546	C4-1/8-T0-1002-F
A9R80	0757-0442	9		RESISTOR 10K 1% .125W F TC=0+-100	24546	C4-1/8-T0-1002-F

See introduction to this section for ordering information
*Indicates factory selected value

Table 6-3. Replaceable Parts

Reference Designation	HP Part Number	C D	Qty	Description	Mfr Code	Mfr Part Number
A9TP1	0360-0535	0	8	TERMINAL TEST POINT PCB	00000	ORDER BY DESCRIPTION
A9TP2	0360-0535	0		TERMINAL TEST POINT PCB	00000	ORDER BY DESCRIPTION
A9TP3	0360-0535	0		TERMINAL TEST POINT PCB	00000	ORDER BY DESCRIPTION
A9TP4	0360-0535	0		TERMINAL TEST POINT PCB	00000	ORDER BY DESCRIPTION
A9TP5	0360-0535	0		TERMINAL TEST POINT PCB	00000	ORDER BY DESCRIPTION
A9TP6	0360-0535	0		TERMINAL TEST POINT PCB	00000	ORDER BY DESCRIPTION
A9TP7	0360-0535	0		TERMINAL TEST POINT PCB	00000	ORDER BY DESCRIPTION
A9TP8	0360-0535	0		TERMINAL TEST POINT PCB	00000	ORDER BY DESCRIPTION
A9U1	1820-1978	4	1	IC RGTR TTL L 12-BIT	34335	AM25L04PC → 74C905
A9U2	1826-0116	2	1	IC COMPARATOR GP TO-99 PKG	06665	CMP-01-CJ
A9U3	1820-1984	2	1	IC CONV 10-B-D/A 16-DIP-C PKG	24355	AD561KD
A9U4	1826-0089	8	1	IC OP AMP WB TO-99 PKG	29832	1322
A9U5	1820-1491	6	2	IC BFR TTL LS NON-INV HEX 1-INP	01295	SN74LS367AN
A9U6	1820-1491	6		IC BFR TTL LS NON-INV HEX 1-INP	01295	SN74LS367AN
A9U7	1820-1546	2	1	IC MULTIPLXR 4-CHAN-ANLG DUAL 16-DIP-C	04713	MC14052BCL ← MC14052BCL
A9U8	1820-1447	2	3	IC TTL LS 16-BIT STAT RAM 45-NS 3-S	01295	SN74LS670N
A9U9	1820-1197	9	1	IC GATE TTL LS NAND QUAD 2-INP	01295	SN74LS00N
A9U10	1820-1112	8	2	IC FF TTL LS D-TYPE POS-EDGE-TRIG	01295	SN74LS74AN
A9U11	1820-1112	8		IC FF TTL LS D-TYPE POS-EDGE-TRIG	01295	SN74LS74AN
A9U12	1820-1423	4	1	IC MV TTL LS MONOSTBL RETRIG DUAL	01295	SN74LS123N
A9U13	1826-0458	5	1	IC OP AMP TO-99 PKG	27014	LF255H
A9U14	1826-0462	1	1	IC CONV 10-B-D/A 16-DIP-C PKG	04713	MC3410CL
A9U15	1820-1447	2		IC TTL LS 16-BIT STAT RAM 45-NS 3-S	01295	SN74LS670N
A9U16	1820-1447	2		IC TTL LS 16-BIT STAT RAM 45-NS 3-S	01295	SN74LS670N
A9U17	1820-1492	7	1	IC BFR TTL LS INV HEX 1-INP	01295	SN74LS368AN
A9U18	1826-0783	9	1	IC OP AMP LOW-NOISE 8-DIP-C PKG	52063	XR5534ACN
A9U19	1826-0188	8	1	IC CONV 8-B-D/A 16-DIP-C PKG	04713	MC1408L-8
A9U20	1820-1982	0	1	IC DRVR TTL DUAL	01295	SN75363N
A9U21	1826-0081	0	1	IC OP AMP WB TO-99 PKG	27014	LM318H
A9VR1	1902-0680	7	2	DIODE-ZNR 1N827 6.2V 5% DO-7 PD=.4W	24046	1N827
A9VR4	1902-0680	7		DIODE-ZNR 1N827 6.2V 5% DO-7 PD=.4W	24046	1N827
A9W1	08569-20035	1	1	CABLE ASSEMBLY-DATA CONVERTER	28480	08569-20035

See introduction to this section for ordering information
*Indicates factory selected value

Table 6-3. Replaceable Parts

Reference Designation	HP Part Number	C D	Qty	Description	Mfr Code	Mfr Part Number
A10	08569-60007	1	1	DISPLAY MOTHERBOARD ASSEMBLY	28480	08569-60007
A10C1	0160-0127	2	3	CAPACITOR-FXD 1UF +-20% 25VDC CER	28480	0160-0127
A10C2	0160-0127	2		CAPACITOR-FXD 1UF +-20% 25VDC CER	28480	0160-0127
A10C3	0160-0127	2		CAPACITOR-FXD 1UF +-20% 25VDC CER	28480	0160-0127
A10J1	1251-6861	7	1	CONNECTOR 20-PIN M POST TYPE	28480	1251-6861
A10J2	1251-4737	2	1	CONNECTOR 50-PIN M RECTANGULAR	28480	1251-4737
A10J3	1251-5151	6	1	CONNECTOR 26-PIN M POST TYPE	28480	1251-5151
A10J4	1251-4930	7	1	CONNECTOR 30-PIN M POST TYPE	28480	1251-4930
A10L1	9100-1788	6	7	CHOKE-WIDE BAND ZMAX=680 OHM@ 180 MHZ	02114	VK200 20/4B
A10L2	9100-1788	6		CHOKE-WIDE BAND ZMAX=680 OHM@ 180 MHZ	02114	VK200 20/4B
A10L3	9100-1788	6		CHOKE-WIDE BAND ZMAX=680 OHM@ 180 MHZ	02114	VK200 20/4B
A10L4	9100-1788	6		CHOKE-WIDE BAND ZMAX=680 OHM@ 180 MHZ	02114	VK200 20/4B
A10L5	9100-1788	6		CHOKE-WIDE BAND ZMAX=680 OHM@ 180 MHZ	02114	VK200 20/4B
A10L6	9100-1788	6		CHOKE-WIDE BAND ZMAX=680 OHM@ 180 MHZ	02114	VK200 20/4B
A10L7	9100-1788	6		CHOKE-WIDE BAND ZMAX=680 OHM@ 180 MHZ	02114	VK200 20/4B
A10L8	9140-0237	2	1	INDUCTOR RF-CH-MLD 200UH 5% .166DX.385LG	28480	9140-0237
A10XA1				NOT ASSIGNED		
A10XA2				NOT ASSIGNED		
A10XA3	1251-0472	4	1	CONNECTOR-PC EDGE 6-CONT/ROW 2-ROWS	28480	1251-0472
A10XA5	1251-1365	6	4	CONNECTOR-PC EDGE 22-CONT/ROW 2-ROWS	28480	1251-1365
A10XA6	1251-2035	9	2	CONNECTOR-PC EDGE 15-CONT/ROW 2-ROWS	28480	1251-2035
A10XA8	1251-1365	6		CONNECTOR-PC EDGE 22-CONT/ROW 2-ROWS	28480	1251-1365
A10XA9	1251-1365	6		CONNECTOR-PC EDGE 22-CONT/ROW 2-ROWS	28480	1251-1365
A10XA4P1	1251-2035	9		CONNECTOR-PC EDGE 15-CONT/ROW 2-ROWS	28480	1251-2035
A10XA4P2	1251-1365	6		CONNECTOR-PC EDGE 22-CONT/ROW 2-ROWS	28480	1251-1365
A10XA7P1	1251-6285	9	2	CONNECTOR-PC EDGE 40-CONT/ROW 2-ROWS	28480	1251-6285
A10XA7P2	1251-6285	9		CONNECTOR-PC EDGE 40-CONT/ROW 2-ROWS	28480	1251-6285
				A10 MISCELLANEOUS PARTS		
	0590-0519	7	5	THREADED INSERT-NUT 4-40 .062-IN-LG STL	28480	0590-0519
	1251-0600	0	4	CONNECTOR-SGL CONT PIN 1.14-MM-BSC-SZ SQ	28480	1251-0600

See introduction to this section for ordering information
*Indicates factory selected value

Table 6-3. Replaceable Parts

Reference Designation	HP Part Number	C D	Qty	Description	Mfr Code	Mfr Part Number
A11	08569-60052	6	1	DVM DIGITAL ASSEMBLY	28480	08569-60052
A11C1	0180-1746	5	3	CAPACITOR-FXD 15UF+-10% 20VDC TA	56289	150D156X9020B2
A11C2	0180-1746	5		CAPACITOR-FXD 15UF+-10% 20VDC TA	56289	150D156X9020B2
A11C3	0180-2208	6	1	CAPACITOR-FXD 220UF+-10% 10VDC TA	56289	150D227X9010S2
A11C4	0160-2055	9	6	CAPACITOR-FXD .01UF +80-20% 100VDC CER	28480	0160-2055
A11C5	0160-2055	9		CAPACITOR-FXD .01UF +80-20% 100VDC CER	28480	0160-2055
A11C6	0180-0197	8	1	CAPACITOR-FXD 2.2UF+-10% 20VDC TA	56289	150D225X9020A2
A11C7	0160-2055	9		CAPACITOR-FXD .01UF +80-20% 100VDC CER	28480	0160-2055
A11C8	0160-2055	9		CAPACITOR-FXD .01UF +80-20% 100VDC CER	28480	0160-2055
A11C9	0160-2055	9		CAPACITOR-FXD .01UF +80-20% 100VDC CER	28480	0160-2055
A11C10	0160-2307	4	1	CAPACITOR-FXD 47PF +-5% 300VDC MICA	28480	0160-2307
A11C11	0160-2222	2	1	CAPACITOR-FXD 1500PF +-5% 300VDC MICA	28480	0160-2222
A11C12	0160-2055	9		CAPACITOR-FXD .01UF +80-20% 100VDC CER	28480	0160-2055
A11C13	0160-0574	3	2	CAPACITOR-FXD .022UF +-20% 100VDC CER	28480	0160-0574
A11C14	0160-0574	3		CAPACITOR-FXD .022UF +-20% 100VDC CER	28480	0160-0574
A11C15	0140-0200	0	1	CAPACITOR-FXD 390PF +-5% 300VDC MICA	72136	DM15F391J0300WV1CR
A11C16	0160-0155	6	1	CAPACITOR-FXD 3300PF +-10% 200VDC POLYE	28480	0160-0155
A11C17	0180-1746	5		CAPACITOR-FXD 15UF+-10% 20VDC TA	56289	150D156X9020B2
A11CR1	1901-0050	3	2	DIODE-SWITCHING 80V 200MA 2NS DO-35	28480	1901-0050
A11CR2	1901-0050	3		DIODE-SWITCHING 80V 200MA 2NS DO-35	28480	1901-0050
A11E1	9170-0029	3	1	CORE-SHIELDING BEAD	28480	9170-0029
A11J1	1200-0507	9	2	SOCKET-IC 16-CONT DIP-SLDR	28480	1200-0507
A11J2	1200-0507	9		SOCKET-IC 16-CONT DIP-SLDR	28480	1200-0507
A11L1	9100-2833	4	1	INDUCTOR 39UH 5% .25DX1LG Q=70	28480	9100-2833
A11L2	9100-1619	2	1	INDUCTOR RF-CH-MLD 6.8UH 10%	28480	9100-1619
A11MP1	1480-0073	6	2	PIN-ROLL .062-IN-DIA .25-IN-LG BE-CU	28480	1480-0073
A11MP2	4040-0748	3	1	EXTRACTOR-PC BOARD (BLACK)	28480	4040-0748
A11MP4	1200-0081	4	2	INSULATOR-FLG-BSHG NYLON	28480	1200-0081
A11MP5	1251-4460	8	2	CLIP-CA-PL-RTNG	28480	1251-4460
A11Q1	1854-0477	7	4	TRANSISTOR NPN 2N2222A SI TO-18 PD=500MW	04713	2N2222A
A11Q2	1854-0477	7		TRANSISTOR NPN 2N2222A SI TO-18 PD=500MW	04713	2N2222A
A11Q3	1854-0477	7		TRANSISTOR NPN 2N2222A SI TO-18 PD=500MW	04713	2N2222A
A11Q4	1854-0019	3	1	TRANSISTOR NPN SI TO-18 PD=360MW	28480	1854-0019
A11Q5	1854-0477	7		TRANSISTOR NPN 2N2222A SI TO-18 PD=500MW	04713	2N2222A
A11R1	0698-3458	7	2	RESISTOR 348K 1% .125W F TC=0+-100	28480	0698-3458
A11R2	0698-3458	7		RESISTOR 348K 1% .125W F TC=0+-100	28480	0698-3458
A11R3	0757-0467	8	2	RESISTOR 121K 1% .125W F TC=0+-100	24546	C4-1/8-T0-1213-F
A11R4	0757-0467	8		RESISTOR 121K 1% .125W F TC=0+-100	24546	C4-1/8-T0-1213-F
A11R5	0698-3243	8	2	RESISTOR 178K 1% .125W F TC=0+-100	24546	C4-1/8-T0-1783-F
A11R6	0698-3243	8		RESISTOR 178K 1% .125W F TC=0+-100	24546	C4-1/8-T0-1783-F
A11R7	0757-0278	9	2	RESISTOR 1.78K 1% .125W F TC=0+-100	24546	C4-1/8-T0-1781-F
A11R8	0757-0279	0	2	RESISTOR 3.16K 1% .125W F TC=0+-100	24546	C4-1/8-T0-3161-F
A11R9	0698-3155	1	2	RESISTOR 4.64K 1% .125W F TC=0+-100	24546	C4-1/8-T0-4641-F
A11R10	0757-0461	2	1	RESISTOR 68.1K 1% .125W F TC=0+-100	24546	C4-1/8-T0-6812-F
A11R11	0698-3161	9	1	RESISTOR 38.3K 1% .125W F TC=0+-100	24546	C4-1/8-T0-3832-F
A11R12	0698-0084	9	1	RESISTOR 2.15K 1% .125W F TC=0+-100	24546	C4-1/8-T0-2151-F
A11R13	0698-0083	8	1	RESISTOR 1.96K 1% .125W F TC=0+-100	24546	C4-1/8-T0-1961-F
A11R14	0757-0280	3	5	RESISTOR 1K 1% .125W F TC=0+-100	24546	C4-1/8-T0-1001-F
A11R15	0757-0278	9		RESISTOR 1.78K 1% .125W F TC=0+-100	24546	C4-1/8-T0-1781-F
A11R16	0757-0419	0	3	RESISTOR 681 1% .125W F TC=0+-100	24546	C4-1/8-T0-681R-F
A11R17	0757-0419	0		RESISTOR 681 1% .125W F TC=0+-100	24546	C4-1/8-T0-681R-F
A11R18	0757-0317	7	1	RESISTOR 1.33K 1% .125W F TC=0+-100	24546	C4-1/8-T0-1331-F
A11R19	0757-0419	0		RESISTOR 681 1% .125W F TC=0+-100	24546	C4-1/8-T0-681R-F
A11R20	0757-0280	3		RESISTOR 1K 1% .125W F TC=0+-100	24546	C4-1/8-T0-1001-F
A11R21	0757-0401	0	1	RESISTOR 100 1% .125W F TC=0+-100	24546	C4-1/8-T0-101-F
A11R22	0757-0180	2	1	RESISTOR 31.6 1% .125W F TC=0+-100	28480	0757-0180
A11R23	0698-3160	8	1	RESISTOR 31.6K 1% .125W F TC=0+-100	24546	C4-1/8-T0-3162-F
A11R24	0757-0279	0		RESISTOR 3.16K 1% .125W F TC=0+-100	24546	C4-1/8-T0-3161-F
A11R25	0757-0280	3		RESISTOR 1K 1% .125W F TC=0+-100	24546	C4-1/8-T0-1001-F
A11R26	0757-0280	3		RESISTOR 1K 1% .125W F TC=0+-100	24546	C4-1/8-T0-1001-F
A11R27	0698-3155	1		RESISTOR 4.64K 1% .125W F TC=0+-100	24546	C4-1/8-T0-4641-F
A11R28	0757-0280	3		RESISTOR 1K 1% .125W F TC=0+-100	24546	C4-1/8-T0-1001-F
A11U1	1820-1740	8	1	IC DRVR TTL DSPL DRVR	27014	DS8863N
A11U2	1820-1443	8	3	IC CNTR TTL LS BIN ASYNCHRO	01295	SN74LS293N
A11U3	1820-1443	8		IC CNTR TTL LS BIN ASYNCHRO	01295	SN74LS293N
A11U4	1810-0208	0	1	NETWORK-RES 8-SIP68.0K OHM X 7	01121	208A683
A11U5	1810-0204	6	1	NETWORK-RES 8-SIP1.0K OHM X 7	01121	208A102
A11U6	1820-1688	3	1	IC DCDR TTL LS BCD-TO-7-SEG	01295	SN74LS247N
A11U7	1858-0057	7	1	TRANSISTOR ARRAY 16-PIN CER DIP	3L585	CA3082F
A11U8	1820-1200	5	1	IC INV TTL LS HEX	01295	SN74LS05N
A11U9	1820-1144	6	1	IC GATE TTL LS NOR QUAD 2-INP	01295	SN74LS02N
A11U10	1820-0586	8	1	IC INV TTL L HEX 1-INP	01295	SN74L04N

See introduction to this section for ordering information
*Indicates factory selected value

Table 6-3. Replaceable Parts

Reference Designation	HP Part Number	C D	Qty	Description	Mfr Code	Mfr Part Number
A11U11	1810-0205	7	3	NETWORK-RES 8-SIP4.7K OHM X 7	01121	208A472
A11U12	1810-0205	7		NETWORK-RES 8-SIP4.7K OHM X 7	01121	208A472
A11U13	1820-0471	0	2	IC INV TTL HEX 1-INP	01295	SN7406N
A11U14	1820-1198	0	1	IC GATE TTL LS NAND QUAD 2-INP	01295	SN74LS03N
A11U15	1820-1216	3	1	IC DCDR TTL LS 3-TO-8-LINE 3-INP	01295	SN74LS138N
A11U16	1820-2319	9	1	IC CNTR IIL DECD HEX	28480	IDB2-8
A11U17	1820-1534	8	1	IC GATE CMOS NOR QUAD 2-INP	3L585	CD4001AF
A11U18	1820-0471	0		IC INV TTL HEX 1-INP	01295	SN7406N
A11U19	1820-1445	0	1	IC LCH TTL LS 4-BIT	01295	SN74LS375N
A11U20	1820-1202	7	1	IC GATE TTL LS NAND TPL 3-INP	01295	SN74LS10N
A11U21	1820-1443	8		IC CNTR TTL LS BIN ASYNCHRO	01295	SN74LS293N
A11U22	1820-1112	8	1	IC FF TTL LS D-TYPE POS-EDGE-TRIG	01295	SN74LS74AN
A11U23	1810-0205	7		NETWORK-RES 8-SIP4.7K OHM X 7	01121	208A472
A11VR1	1902-0048	1	1	DIODE-ZNR 6.81V 5% DO-35 PD=.4W	28480	1902-0048
A11VR2	1902-3036	3	1	DIODE-ZNR 3.16V 5% DO-7 PD=.4W TC=-.064%	28480	1902-3036
A11Y1	0410-0490	3	1	CRYSTAL-QUARTZ 2.500 MHZ	28480	0410-0490

See introduction to this section for ordering information
*Indicates factory selected value

Table 6-3. Replaceable Parts

Reference Designation	HP Part Number	C D	Qty	Description	Mfr Code	Mfr Part Number
A12	08565-60016	8	1	DVM ANALOG ASSEMBLY	28480	08565-60016
A12C1	0160-2204	0	2	CAPACITOR-FXD 100PF +-5% 300VDC MICA	28480	0160-2204
A12C2	0160-2207	3	2	CAPACITOR-FXD 300PF +-5% 300VDC MICA	28480	0160-2207
A12C3	0180-2208	6	1	CAPACITOR-FXD 220UF+-10% 10VDC TA	56289	150D227X9010S2
A12C4	0180-1746	5	2	CAPACITOR-FXD 15UF+-10% 20VDC TA	56289	150D156X9020B2
A12C5	0180-1746	5		CAPACITOR-FXD 15UF+-10% 20VDC TA	56289	150D156X9020B2
A12C6	0160-2199	2	2	CAPACITOR-FXD 30PF +-5% 300VDC MICA	28480	0160-2199
A12C7	0160-2204	0		CAPACITOR-FXD 100PF +-5% 300VDC MICA	28480	8160-2204
A12C8	0160-4084	8	5	CAPACITOR-FXD .1UF +-20% 50VDC CER	28480	0160-4084
A12C9	5080-9047	8	1	CAPACITOR	28480	5080-9047
A12C10	0160-2207	3		CAPACITOR-FXD 300PF +-5% 300VDC MICA	28480	0160-2207
A12C11	0160-4084	8		CAPACITOR-FXD .1UF +-20% 50VDC CER	28480	0160-4084
A12C12	0160-4084	8		CAPACITOR-FXD .1UF +-20% 50VDC CER	28480	0160-4084
A12C13	0160-0575	4	1	CAPACITOR-FXD .047UF +-20% 50VDC CER	28480	0160-0575
A12C14	0160-3456	6	1	CAPACITOR-FXD 1000PF +-10% 1KVDC CER	28480	0160-3456
A12C15	0180-2182	5	1	CAPACITOR-FXD 18UF+-10% 50VDC TA	56289	150D186X9050R2
A12C16	0160-2199	2		CAPACITOR-FXD 30PF +-5% 300VDC MICA	28480	0160-2199
A12C17	0170-0066	9	2	CAPACITOR-FXD .027UF +-10% 200VDC POLYE	28480	0170-0066
A12C18	0170-0066	9		CAPACITOR-FXD .027UF +-10% 200VDC POLYE	28480	0170-0066
A12C19	0160-4084	8		CAPACITOR-FXD .1UF +-20% 50VDC CER	28480	0160-4084
A12C20	0160-4084	8		CAPACITOR-FXD .1UF +-20% 50VDC CER	28480	0160-4084
A12C21	0160-3501	2	1	CAPACITOR-FXD 4UF +-10% 50VDC MET-POLYC	28480	0160-3501
A12C22	0160-2055	9	1	CAPACITOR-FXD .01UF +80-20% 100VDC CER	28480	0160-2055
A12C23*	0160-4498	8	1	CAPACITOR-FXD 5.6PF +-.5PF 200VDC CER	28480	0160-4498
A12CR1	1901-0050	3	8	DIODE-SWITCHING 80V 200MA 2NS DO-35	28480	1901-0050
A12CR2	1901-0050	3		DIODE-SWITCHING 80V 200MA 2NS DO-35	28480	1901-0050
A12CR3	1901-0050	3		DIODE-SWITCHING 80V 200MA 2NS DO-35	28480	1901-0050
A12CR4	1901-0050	3		DIODE-SWITCHING 80V 200MA 2NS DO-35	28480	1901-0050
A12CR5	1901-0376	6	3	DIODE-GEN PRP 35V 50MA DO-35	28480	1901-0376
A12CR6	1901-0050	3		DIODE-SWITCHING 80V 200MA 2NS DO-35	28480	1901-0050
A12CR7	1901-0050	3		DIODE-SWITCHING 80V 200MA 2NS DO-35	28480	1901-0050
A12CR8	1901-0376	6		DIODE-GEN PRP 35V 50MA DO-35	28480	1901-0376
A12CR9	1901-0050	3		DIODE-SWITCHING 80V 200MA 2NS DO-35	28480	1901-0050
A12CR10	1901-0376	6		DIODE-GEN PRP 35V 50MA DO-35	28480	1901-0376
A12CR11	1901-0586	0	1	DIODE-GEN PRP 30V 25MA TO-72	28480	1901-0586
A12CR12	1901-0050	3		DIODE-SWITCHING 80V 200MA 2NS DO-35	28480	1901-0050
A12E1	0340-0060	4	8	TERMINAL-STUD SPCL-FDTHRU PRESS-MTG	98291	011-6809 000 209
A12E2	0340-0060	4		TERMINAL-STUD SPCL-FDTHRU PRESS-MTG	98291	011-6809 000 209
A12E3	0340-0060	4		TERMINAL-STUD SPCL-FDTHRU PRESS-MTG	98291	011-6809 000 209
A12E4	0340-0060	4		TERMINAL-STUD SPCL-FDTHRU PRESS-MTG	98291	011-6809 000 209
A12E5	0340-0060	4		TERMINAL-STUD SPCL-FDTHRU PRESS-MTG	98291	011-6809 000 209
A12E6	0340-0060	4		TERMINAL-STUD SPCL-FDTHRU PRESS-MTG	98291	011-6809 000 209
A12E7	0340-0060	4		TERMINAL-STUD SPCL-FDTHRU PRESS-MTG	98291	011-6809 000 209
A12E8	0340-0060	4		TERMINAL-STUD SPCL-FDTHRU PRESS-MTG	98291	011-6809 000 209
A12L1	9140-0129	1	2	INDUCTOR RF-CH-MLD 220UH 5% .166DX.385LG	28480	9140-0129
A12L2	9140-0129	1		INDUCTOR RF-CH-MLD 220UH 5% .166DX.385LG	28480	9140-0129
A12Q1	1854-0023	9	3	TRANSISTOR NPN SI TO-18 PD=360MW	28480	1854-0023
A12Q2	1853-0034	0	5	TRANSISTOR PNP SI TO-18 PD=360MW	28480	1853-0034
A12Q3	1855-0093	5	1	TRANSISTOR J-FET N-CHAN D-MODE TO-18 SI	28480	1855-0093
A12Q4	1855-0412	2	2	TRANSISTOR J-FET N-CHAN D-MODE TO-18 SI	28480	1855-0412
A12Q5	1855-0308	5	1	TRANSISTOR-JFET DUAL N-CHAN D-MODE SI	28480	1855-0308
A12Q6	1854-0023	9		TRANSISTOR NPN SI TO-18 PD=360MW	28480	1854-0023
A12Q7	1855-0412	2		TRANSISTOR J-FET N-CHAN D-MODE TO-18 SI	28480	1855-0412
A12Q8	1854-0023	9		TRANSISTOR NPN SI TO-18 PD=360MW	28480	1854-0023
A12Q9	1855-0418	8	1	TRANSISTOR-JFET DUAL N-CHAN D-MODE SI	28480	1855-0418
A12Q10	1855-0305	2	4	TRANSISTOR J-FET 2N4117A N-CHAN D-MODE	17856	2N4117A
A12Q11	1855-0305	2		TRANSISTOR J-FET 2N4117A N-CHAN D-MODE	17856	2N4117A
A12Q12	1855-0305	2		TRANSISTOR J-FET 2N4117A N-CHAN D-MODE	17856	2N4117A
A12Q13	1855-0305	2		TRANSISTOR J-FET 2N4117A N-CHAN D-MODE	17856	2N4117A
A12Q14	1853-0034	0		TRANSISTOR PNP SI TO-18 PD=360MW	28480	1853-0034
A12Q15	1853-0034	0		TRANSISTOR PNP SI TO-18 PD=360MW	28480	1853-0034
A12Q16	1853-0034	0		TRANSISTOR PNP SI TO-18 PD=360MW	28480	1853-0034
A12Q17	1853-0034	0		TRANSISTOR PNP SI TO-18 PD=360MW	28480	1853-0034
A12R1	0698-8829	6	2	RESISTOR 20K .1% .125W F TC=0+-10	28480	0698-8829
A12R2	0698-8839	8	1	RESISTOR 2.2222K .1% .125W F TC=0+-10	28480	0698-8839
A12R3	0698-8824	1	1	RESISTOR 562K 1% .125W F TC=0+-100	28480	0698-8824
A12R4	0757-0442	9	13	RESISTOR 10K 1% .125W F TC=0+-100	24546	C4-1/8-T0-1002-F
A12R5	0698-0085	0	4	RESISTOR 2.61K 1% .125W F TC=0+-100	24546	C4-1/8-T0-2611-F
A12R6	0757-0442	9		RESISTOR 10K 1% .125W F TC=0+-100	24546	C4-1/8-T0-1002-F
A12R7	0698-3454	3	3	RESISTOR 215K 1% .125W F TC=0+-100	24546	C4-1/8-T0-2153-F
A12R8	0757-0442	9		RESISTOR 10K 1% .125W F TC=0+-100	24546	C4-1/8-T0-1002-F
A12R9	0698-0085	0		RESISTOR 2.61K 1% .125W F TC=0+-100	24546	C4-1/8-T0-2611-F
A12R10	0757-0442	9		RESISTOR 10K 1% .125W F TC=0+-100	24546	C4-1/8-T0-1002-F

See introduction to this section for ordering information
*Indicates factory selected value

Table 6-3. Replaceable Parts

Reference Designation	HP Part Number	C D	Qty	Description	Mfr Code	Mfr Part Number
A12R11	0698-3454	3		RESISTOR 215K 1% .125W F TC=0+-100	24546	C4-1/8-T0-2153-F
A12R12	0698-3454	3		RESISTOR 215K 1% .125W F TC=0+-100	24546	C4-1/8-T0-2153-F
A12R13	0698-3558	8	3	RESISTOR 4.02K 1% .125W F TC=0+-100	24546	C4-1/8-T0-4021-F
A12R14	0757-0280	3	2	RESISTOR 1K 1% .125W F TC=0+-100	24546	C4-1/8-T0-1001-F
A12R15	0757-0442	9		RESISTOR 10K 1% .125W F TC=0+-100	24546	C4-1/8-T0-1002-F
A12R16	0698-0085	0		RESISTOR 2.61K 1% .125W F TC=0+-100	24546	C4-1/8-T0-2611-F
A12R17	0757-0442	9		RESISTOR 10K 1% .125W F TC=0+-100	24546	C4-1/8-T0-1002-F
A12R18	2100-3353	8	2	RESISTOR-TRMR 20K 10% C SIDE-ADJ 1-TRN	28480	2100-3353
A12R19	0698-8829	6		RESISTOR 20K .1% .125W F TC=0+-10	28480	0698-8829
A12R20	0698-3157	3	2	RESISTOR 19.6K 1% .125W F TC=0+-100	24546	C4-1/8-T0-1962-F
A12R21	0698-8840	1	1	RESISTOR 2.1885K .1% .125W F TC=0+-10	28480	0698-8840
A12R22	0698-3430	5	1	RESISTOR 21.5 1% .125W F TC=0+-100	03888	PME55-1/8-T0-21R5-F
A12R23	0757-0442	9		RESISTOR 10K 1% .125W F TC=0+-100	24546	C4-1/8-T0-1002-F
A12R24	0698-0085	0		RESISTOR 2.61K 1% .125W F TC=0+-100	24546	C4-1/8-T0-2611-F
A12R25	0757-0442	9		RESISTOR 10K 1% .125W F TC=0+-100	24546	C4-1/8-T0-1002-F
A12R26	0698-3160	8	1	RESISTOR 31.6K 1% .125W F TC=0+-100	24546	C4-1/8-T0-3162-F
A12R27	0757-0279	0	2	RESISTOR 3.16K 1% .125W F TC=0+-100	24546	C4-1/8-T0-3161-F
A12R28	0757-0442	9		RESISTOR 10K 1% .125W F TC=0+-100	24546	C4-1/8-T0-1002-F
A12R29	0757-0279	0		RESISTOR 3.16K 1% .125W F TC=0+-100	24546	C4-1/8-T0-3161-F
A12R30	0757-0465	6	1	RESISTOR 100K 1% .125W F TC=0+-100	24546	C4-1/8-T0-1003-F
A12R31	0757-0449	6	5	RESISTOR 20K 1% .125W F TC=0+-100	24546	C4-1/8-T0-2002-F
A12R32	0757-0459	8	2	RESISTOR 56.2K 1% .125W F TC=0+-100	24546	C4-1/8-T0-5622-F
A12R33	0757-0449	6		RESISTOR 20K 1% .125W F TC=0+-100	24546	C4-1/8-T0-2002-F
A12R34	0757-0449	6		RESISTOR 20K 1% .125W F TC=0+-100	24546	C4-1/8-T0-2002-F
A12R35	0757-0442	9		RESISTOR 10K 1% .125W F TC=0+-100	24546	C4-1/8-T0-1002-F
A12R36	0698-3558	8		RESISTOR 4.02K 1% .125W F TC=0+-100	24546	C4-1/8-T0-4021-F
A12R37	2100-3212	8	1	RESISTOR-TRMR 200 10% C TOP-ADJ 1-TRN	28480	2100-3212
A12R38	0757-0442	9		RESISTOR 10K 1% .125W F TC=0+-100	24546	C4-1/8-T0-1002-F
A12R39	0757-0442	9		RESISTOR 10K 1% .125W F TC=0+-100	24546	C4-1/8-T0-1002-F
A12R40	0698-3558	8		RESISTOR 4.02K 1% .125W F TC=0+-100	24546	C4-1/8-T0-4021-F
A12R41	0757-0449	6		RESISTOR 20K 1% .125W F TC=0+-100	24546	C4-1/8-T0-2002-F
A12R42	0757-0449	6		RESISTOR 20K 1% .125W F TC=0+-100	24546	C4-1/8-T0-2002-F
A12R43	0698-0084	9	1	RESISTOR 2.15K 1% .125W F TC=0+-100	24546	C4-1/8-T0-2151-F
A12R44	0757-0442	9		RESISTOR 10K 1% .125W F TC=0+-100	24546	C4-1/8-T0-1002-F
A12R45	0698-3432	7	1	RESISTOR 26.1 1% .125W F TC=0+-100	03888	PME55-1/8-T0-26R1-F
A12R46	0698-3132	4	1	RESISTOR 261 1% .125W F TC=0+-100	24546	C4-1/8-T0-2610-F
A12R47	0757-0288	1	1	RESISTOR 9.09K 1% .125W F TC=0+-100	19701	MF4C1/8-T0-9091-F
A12R48	0757-0280	3		RESISTOR 1K 1% .125W F TC=0+-100	24546	C4-1/8-T0-1001-F
A12R49	0698-0083	8	1	RESISTOR 1.96K 1% .125W F TC=0+-100	24546	C4-1/8-T0-1961-F
A12R50	0698-3157	3		RESISTOR 19.6K 1% .125W F TC=0+-100	24546	C4-1/8-T0-1962-F
A12R51	0698-3443	0	1	RESISTOR 287 1% .125W F TC=0+-100	24546	C4-1/8-T0-287R-F
A12R52*	0757-0428	1	1	RESISTOR 1.62K 1% .125W F TC=0+-100	24546	C4-1/8-T0-1621-F
A12R53	2100-3273	1	1	RESISTOR-TRMR 2K 10% C SIDE-ADJ 1-TRN	28480	2100-3273
A12R54	0698-3159	5	1	RESISTOR 26.1K 1% .125W F TC=0+-100	24546	C4-1/8-T0-2612-F
A12R55	0698-3445	2	1	RESISTOR 348 1% .125W F TC=0+-100	24546	C4-1/8-T0-348R-F
A12R56	2100-3353	8		RESISTOR-TRMR 20K 10% C SIDE-ADJ 1-TRN	28480	2100-3353
A12R57	0698-3450	9	1	RESISTOR 42.2K 1% .125W F TC=0+-100	24546	C4-1/8-T0-4222-F
A12R58	0757-0459	8		RESISTOR 56.2K 1% .125W F TC=0+-100	24546	C4-1/8-T0-5622-F
A12S1	3101-1274	1	1	SWITCH-SL SPDT SUBMIN 2A 120VAC PC	28480	3101-1274
A12TP1	1251-0600	0	3	CONNECTOR-SGL CONT PIN 1.14-MM-BSC-SZ SQ	28480	1251-0600
A12TP2	0360-0077	5	1	TERMINAL-STUD SGL-TUR SWGFRM-MTG	28480	0360-0077
A12TP3	1251-0600	0		CONNECTOR-SGL CONT PIN 1.14-MM-BSC-SZ SQ	28480	1251-0600
A12TP4	1251-0600	0		CONNECTOR-SGL CONT PIN 1.14-MM-BSC-SZ SQ	28480	1251-0600
A12U1	1820-0223	0	3	IC OP AMP GP TO-99 PKG	3L585	CA301AT
A12U2	1820-0223	0		IC OP AMP GP TO-99 PKG	3L585	CA301AT
A12U3	1826-0009	2	1	IC OP AMP TO-99 PKG	06665	SSS725CJ
A12U4	1820-0223	0		IC OP AMP GP TO-99 PKG	3L585	CA301AT
A12U5	1820-0321	9	1	IC COMPARATOR GP TO-99 PKG	01295	SN72710L
A12U6	1820-1211	8	1	IC GATE TTL LS EXCL-OR QUAD 2-INP	01295	SN74LS86N
A12U7	1820-1197	9	2	IC GATE TTL LS NAND QUAD 2-INP	01295	SN74LS00N
A12U8	1820-1195	7	1	IC FF TTL LS D-TYPE POS-EDGE-TRIG COM	01295	SN74LS175N
A12U9	1820-1197	9		IC GATE TTL LS NAND QUAD 2-INP	01295	SN74LS00N
A12VR1	1902-0041	4	1	DIODE-ZNR 5.11V 5% DO-35 PD=.4W	28480	1902-0041
A12VR2	1902-0025	4	1	DIODE-ZNR 10V 5% DO-35 PD=.4W TC=+.06%	28480	1902-0025
A12VR3	1902-3036	3	1	DIODE-ZNR 3.16V 5% DO-7 PD=.4W TC=-.064%	28480	1902-3036
				A12 MISCELLANEOUS PARTS		
	1480-0073	6	2	PIN-ROLL .062-IN-DIA .25-IN-LG BE-CU	28480	1480-0073
	4040-0748	3	1	EXTR-PC BD BLK POLYC .062-BD-THKNS	28480	4040-0748
	4040-0749	4	1	EXTR-PC BD BRN POLYC .062-BD-THKNS	28480	4040-0749

See introduction to this section for ordering information
*Indicates factory selected value

Table 6-3. Replaceable Parts

Reference Designation	HP Part Number	C D	Qty	Description	Mfr Code	Mfr Part Number
A13	08569-60071	9	1	RELAY DRIVER ASSEMBLY	28480	08569-60071
A13CR1	1901-0050	3	19	DIODE-SWITCHING 80V 200MA 2NS DO-35	28480	1901-0050
A13CR2	1901-0050	3		DIODE-SWITCHING 80V 200MA 2NS DO-35	28480	1901-0050
A13CR3				NOT ASSIGNED		
A13CR4	1901-0539	3	1	DIODE-SM SIG SCHOTTKY	28480	1901-0539
A13CR5	1901-0050	3		DIODE-SWITCHING 80V 200MA 2NS DO-35	28480	1901-0050
A13CR6	1901-0050	3		DIODE-SWITCHING 80V 200MA 2NS DO-35	28480	1901-0050
A13CR7	1901-0050	3		DIODE-SWITCHING 80V 200MA 2NS DO-35	28480	1901-0050
A13CR8	1901-0050	3		DIODE-SWITCHING 80V 200MA 2NS DO-35	28480	1901-0050
A13CR9	1901-0050	3		DIODE-SWITCHING 80V 200MA 2NS DO-35	28480	1901-0050
A13CR10	1901-0050	3		DIODE-SWITCHING 80V 200MA 2NS DO-35	28480	1901-0050
A13CR11	1901-0050	3		DIODE-SWITCHING 80V 200MA 2NS DO-35	28480	1901-0050
A13CR12	1901-0050	3		DIODE-SWITCHING 80V 200MA 2NS DO-35	28480	1901-0050
A13CR13	1901-0050	3		DIODE-SWITCHING 80V 200MA 2NS DO-35	28480	1901-0050
A13CR14	1901-0050	3		DIODE-SWITCHING 80V 200MA 2NS DO-35	28480	1901-0050
A13CR15	1901-0050	3		DIODE-SWITCHING 80V 200MA 2NS DO-35	28480	1901-0050
A13CR16	1901-0050	3		DIODE-SWITCHING 80V 200MA 2NS DO-35	28480	1901-0050
A13CR17	1901-0050	3		DIODE-SWITCHING 80V 200MA 2NS DO-35	28480	1901-0050
A13CR18	1901-0743	1	3	DIODE-PWR RECT 1N4004 400V 1A DO-41	01295	1N4004
A13CR19	1901-0050	3		DIODE-SWITCHING 80V 200MA 2NS DO-35	28480	1901-0050
A13CR20				NOT ASSIGNED		
A13CR21	1901-0743	1		DIODE-PWR RECT 1N4004 400V 1A DO-41	01295	1N4004
A13CR22	1901-0050	3		DIODE-SWITCHING 80V 200MA 2NS DO-35	28480	1901-0050
A13CR23	1901-0743	1		DIODE-PWR RECT 1N4004 400V 1A DO-41	01295	1N4004
A13CR24	1901-0050	3		DIODE-SWITCHING 80V 200MA 2NS DO-35	28480	1901-0050
A13CR25	1901-0050	3		DIODE-SWITCHING 80V 200MA 2NS DO-35	28480	1901-0050
A13Q1	1854-0404	0	6	TRANSISTOR NPN SI TO-18 PD=360MW	28480	1854-0404
A13Q2	1854-0404	0		TRANSISTOR NPN SI TO-18 PD=360MW	28480	1854-0404
A13Q3	1853-0007	7	1	TRANSISTOR PNP 2N3251 SI TO-18 PD=360MW	04713	2N3251
A13Q4	1854-0404	0		TRANSISTOR NPN SI TO-18 PD=360MW	28480	1854-0404
A13Q5	1854-0404	0		TRANSISTOR NPN SI TO-18 PD=360MW	28480	1854-0404
A13Q6	1854-0404	0		TRANSISTOR NPN SI TO-18 PD=360MW	28480	1854-0404
A13Q7	1854-0404	0		TRANSISTOR NPN SI TO-18 PD=360MW	28480	1854-0404
A13Q8	1854-0637	1	3	TRANSISTOR NPN 2N2219A SI TO-5 PD=800MW	01295	2N2219A
A13Q9	1854-0637	1		TRANSISTOR NPN 2N2219A SI TO-5 PD=800MW	01295	2N2219A
A13Q10	1854-0637	1		TRANSISTOR NPN 2N2219A SI TO-5 PD=800MW	01295	2N2219A
A13R1	0757-0458	7	1	RESISTOR 51.1K 1% .125W F TC=0+-100	24546	C4-1/8-T0-5112-F
A13R2	0757-0199	3	12	RESISTOR 21.5K 1% .125W F TC=0+-100	24546	C4-1/8-T0-2152-F
A13R3	0757-0199	3		RESISTOR 21.5K 1% .125W F TC=0+-100	24546	C4-1/8-T0-2152-F
A13R4	0757-0438	3	1	RESISTOR 5.11K 1% .125W F TC=0+-100	24546	C4-1/8-T0-5111-F
A13R5	0698-0084	9	1	RESISTOR 2.15K 1% .125W F TC=0+-100	24546	C4-1/8-T0-2151-F
A13R6	0757-0199	3		RESISTOR 21.5K 1% .125W F TC=0+-100	24546	C4-1/8-T0-2152-F
A13R7	0757-0199	3		RESISTOR 21.5K 1% .125W F TC=0+-100	24546	C4-1/8-T0-2152-F
A13R8	0698-0083	8	1	RESISTOR 1.96K 1% .125W F TC=0+-100	24546	C4-1/8-T0-1961-F
A13R9	0757-0199	3		RESISTOR 21.5K 1% .125W F TC=0+-100	24546	C4-1/8-T0-2152-F
A13R10	0757-0199	3		RESISTOR 21.5K 1% .125W F TC=0+-100	24546	C4-1/8-T0-2152-F
A13R11	0757-0199	3		RESISTOR 21.5K 1% .125W F TC=0+-100	24546	C4-1/8-T0-2152-F
A13R12	0757-0199	3		RESISTOR 21.5K 1% .125W F TC=0+-100	24546	C4-1/8-T0-2152-F
A13R13	0757-0199	3		RESISTOR 21.5K 1% .125W F TC=0+-100	24546	C4-1/8-T0-2152-F
A13R14	0757-0199	3		RESISTOR 21.5K 1% .125W F TC=0+-100	24546	C4-1/8-T0-2152-F
A13R15	0757-0279	0	1	RESISTOR 3.16K 1% .125W F TC=0+-100	24546	C4-1/8-T0-3161-F
A13R16	0757-0428	1	1	RESISTOR 1.62K 1% .125W F TC=0+-100	24546	C4-1/8-T0-1621-F
A13R17	0757-0199	3		RESISTOR 21.5K 1% .125W F TC=0+-100	24546	C4-1/8-T0-2152-F
A13R18	0757-0159	5	1	RESISTOR 1K 1% .5W F TC=0+-100	28480	0757-0159
A13R19	0757-0199	3		RESISTOR 21.5K 1% .125W F TC=0+-100	24546	C4-1/8-T0-2152-F
A13TP1	1251-0600	0	6	CONNECTOR-SGL CONT PIN 1.14-MM-BSC-SZ SQ	28480	1251-0600
A13TP2	1251-0600	0		CONNECTOR-SGL CONT PIN 1.14-MM-BSC-SZ SQ	28480	1251-0600
A13TP3	1251-0600	0		CONNECTOR-SGL CONT PIN 1.14-MM-BSC-SZ SQ	28480	1251-0600
A13TP4	1251-0600	0		CONNECTOR-SGL CONT PIN 1.14-MM-BSC-SZ SQ	28480	1251-0600
A13TP5	1251-0600	0		CONNECTOR-SGL CONT PIN 1.14-MM-BSC-SZ SQ	28480	1251-0600
A13TP6	1251-0600	0		CONNECTOR-SGL CONT PIN 1.14-MM-BSC-SZ SQ	28480	1251-0600
A13U1	1820-1112	8	1	IC FF TTL LS D-TYPE POS-EDGE-TRIG	01295	SN74LS74AN
				A13 MISCELLANEOUS PARTS		
	1480-0073	6	2	PIN-ROLL .062-IN-DIA .25-IN-LG BE-CU	28480	1480-0073
	4040-0748	3	1	EXTR-PC BD BLK POLYC .062-BD-THKNS	28480	4040-0748
	4040-0750	7	1	EXTR-PC BD RED POLYC .062-BD-THKNS	28480	4040-0750

See introduction to this section for ordering information
*Indicates factory selected value

Table 6-3. Replaceable Parts

Reference Designation	HP Part Number	C D	Qty	Description	Mfr Code	Mfr Part Number
A14	08565-60018	0	1	TUNING STABILIZER CONTROL ASSEMBLY	28480	08565-60018
A14C1	0180-1743	2	4	CAPACITOR-FXD .1UF+-10% 35VDC TA	56289	150D104X9035A2
A14C2	0180-0291	3	2	CAPACITOR-FXD 1UF+-10% 35VDC TA	56289	150D105X9035A2
A14C3	0180-1743	2		CAPACITOR-FXD .1UF+-10% 35VDC TA	56289	150D104X9035A2
A14C4	0180-1743	2		CAPACITOR-FXD .1UF+-10% 35VDC TA	56289	150D104X9035A2
A14C5	0180-1743	2		CAPACITOR-FXD .1UF+-10% 35VDC TA	56289	150D104X9035A2
A14C6	0160-3875	3	6	CAPACITOR-FXD 22PF +-5% 200VDC CER 0+-30	28480	0160-3875
A14C7	0160-0302	5	1	CAPACITOR-FXD .018UF +-10% 200VDC POLYE	28480	0160-0302
A14C8	0180-0291	3		CAPACITOR-FXD 1UF+-10% 35VDC TA	56289	150D105X9035A2
A14C9	0160-3877	5	1	CAPACITOR-FXD 100PF +-20% 200VDC CER	28480	0160-3877
A14C10	0160-3875	3		CAPACITOR-FXD 22PF +-5% 200VDC CER 0+-30	28480	0160-3875
A14C11	0160-3473	7	1	CAPACITOR-FXD .039UF +-5% 100VDC TFE	01884	AF9A1B393J
A14C12	0160-0162	5	1	CAPACITOR-FXD .022UF +-10% 200VDC POLYE	28480	0160-0162
A14C13	0160-3875	3		CAPACITOR-FXD 22PF +-5% 200VDC CER 0+-30	28480	0160-3875
A14C14	0160-0157	8	1	CAPACITOR-FXD 4700PF +-10% 200VDC POLYE	28480	0160-0157
A14C15	0180-0229	7	1	CAPACITOR-FXD 33UF+-10% 10VDC TA	56289	150D336X9010B2
A14C16	0160-3875	3		CAPACITOR-FXD 22PF +-5% 200VDC CER 0+-30	28480	0160-3875
A14C17	0160-3875	3		CAPACITOR-FXD 22PF +-5% 200VDC CER 0+-30	28480	0160-3875
A14C18	0160-3875	3		CAPACITOR-FXD 22PF +-5% 200VDC CER 0+-30	28480	0160-3875
A14C19*	0160-0575	4	1	CAPACITOR-FXD .047UF +-20% 50VDC CER	28480	0160-0575
A14C20	0180-1731	8	2	CAPACITOR-FXD 4.7UF+-10% 50VDC TA	56289	150D475X9050B2
A14C21	0160-2249	3	2	CAPACITOR-FXD 4.7PF +-.25PF 500VDC CER	28480	0160-2249
A14C22	0160-2249	3		CAPACITOR-FXD 4.7PF +-.25PF 500VDC CER	28480	0160-2249
A14C23	0180-1731	8		CAPACITOR-FXD 4.7UF+-10% 50VDC TA	56289	150D475X9050B2
A14CR1	1901-0050	3	11	DIODE-SWITCHING 80V 200MA 2NS DO-35	28480	1901-0050
A14CR2	1901-0050	3		DIODE-SWITCHING 80V 200MA 2NS DO-35	28480	1901-0050
A14CR3	1901-0050	3		DIODE-SWITCHING 80V 200MA 2NS DO-35	28480	1901-0050
A14CR4	1901-0050	3		DIODE-SWITCHING 80V 200MA 2NS DO-35	28480	1901-0050
A14CR5	1901-0050	3		DIODE-SWITCHING 80V 200MA 2NS DO-35	28480	1901-0050
A14CR6	1901-0050	3		DIODE-SWITCHING 80V 200MA 2NS DO-35	28480	1901-0050
A14CR7	1901-0050	3		DIODE-SWITCHING 80V 200MA 2NS DO-35	28480	1901-0050
A14CR8	1901-0050	3		DIODE-SWITCHING 80V 200MA 2NS DO-35	28480	1901-0050
A14CR9	1901-0050	3		DIODE-SWITCHING 80V 200MA 2NS DO-35	28480	1901-0050
A14CR10	1901-0050	3		DIODE-SWITCHING 80V 200MA 2NS DO-35	28480	1901-0050
A14CR11	1901-0050	3		DIODE-SWITCHING 80V 200MA 2NS DO-35	28480	1901-0050
A14E1	0340-0037	5	1	TERMINAL-STUD DBL-TUR PRESS-MTG	28480	0340-0037
A14K1	0490-0782	4	1	RELAY-REED 1A 100MA 12VDC-COIL 3VA	28480	0490-0782
A14Q1	1854-0404	0	7	TRANSISTOR NPN SI TO-18 PD=360MW	28480	1854-0404
A14Q2	1853-0314	9	2	TRANSISTOR PNP 2N2905A SI TO-39 PD=600MW	04713	2N2905A
A14Q3	1854-0404	0		TRANSISTOR NPN SI TO-18 PD=360MW	28480	1854-0404
A14Q4	1853-0007	7	10	TRANSISTOR PNP 2N3251 SI TO-18 PD=360MW	04713	2N3251
A14Q5	1854-0404	0		TRANSISTOR NPN SI TO-18 PD=360MW	28480	1854-0404
A14Q6	1853-0007	7		TRANSISTOR PNP 2N3251 SI TO-18 PD=360MW	04713	2N3251
A14Q7	1853-0007	7		TRANSISTOR PNP 2N3251 SI TO-18 PD=360MW	04713	2N3251
A14Q8	1853-0007	7		TRANSISTOR PNP 2N3251 SI TO-18 PD=360MW	04713	2N3251
A14Q9	1853-0007	7		TRANSISTOR PNP 2N3251 SI TO-18 PD=360MW	04713	2N3251
A14Q10	1853-0007	7		TRANSISTOR PNP 2N3251 SI TO-18 PD=360MW	04713	2N3251
A14Q11	1854-0404	0		TRANSISTOR NPN SI TO-18 PD=360MW	28480	1854-0404
A14Q12	1853-0007	7		TRANSISTOR PNP 2N3251 SI TO-18 PD=360MW	04713	2N3251
A14Q13	1854-0404	0		TRANSISTOR NPN SI TO-18 PD=360MW	28480	1854-0404
A14Q14	1853-0007	7		TRANSISTOR PNP 2N3251 SI TO-18 PD=360MW	04713	2N3251
A14Q15	1854-0404	0		TRANSISTOR NPN SI TO-18 PD=360MW	28480	1854-0404
A14Q16	1853-0007	7		TRANSISTOR PNP 2N3251 SI TO-18 PD=360MW	04713	2N3251
A14Q17	1854-0637	1	1	TRANSISTOR NPN 2N2219A SI TO-5 PD=800MW	01295	2N2219A
A14Q18	1853-0314	9		TRANSISTOR PNP 2N2905A SI TO-39 PD=600MW	04713	2N2905A
A14Q19	1855-0020	8	2	TRANSISTOR J-FET N-CHAN D-MODE TO-18 SI	28480	1855-0020
A14Q20	1855-0098	0	1	TRANSISTOR P-CHAN E-MODE TO-72 SI	28480	1855-0098
A14Q21	1854-0404	0		TRANSISTOR NPN SI TO-18 PD=360MW	28480	1854-0404
A14Q22	1853-0007	7		TRANSISTOR PNP 2N3251 SI TO-18 PD=360MW	04713	2N3251
A14Q23	1855-0020	8		TRANSISTOR J-FET N-CHAN D-MODE TO-18 SI	28480	1855-0020
A14R1	0698-3450	9	19	RESISTOR 42.2K 1% .125W F TC=0+-100	24546	C4-1/8-T0-4222-F
A14R2	0698-3260	9	10	RESISTOR 464K 1% .125W F TC=0+-100	28480	0698-3260
A14R3	0698-3450	9		RESISTOR 42.2K 1% .125W F TC=0+-100	24546	C4-1/8-T0-4222-F
A14R4	0698-3450	9		RESISTOR 42.2K 1% .125W F TC=0+-100	24546	C4-1/8-T0-4222-F
A14R5	0698-3450	9		RESISTOR 42.2K 1% .125W F TC=0+-100	24546	C4-1/8-T0-4222-F
A14R6	0698-3260	9		RESISTOR 464K 1% .125W F TC=0+-100	28480	0698-3260
A14R7	0698-3450	9		RESISTOR 42.2K 1% .125W F TC=0+-100	24546	C4-1/8-T0-4222-F
A14R8	0698-3450	9		RESISTOR 42.2K 1% .125W F TC=0+-100	24546	C4-1/8-T0-4222-F
A14R9	0698-3450	9		RESISTOR 42.2K 1% .125W F TC=0+-100	24546	C4-1/8-T0-4222-F
A14R10	0698-3260	9		RESISTOR 464K 1% .125W F TC=0+-100	28480	0698-3260

See introduction to this section for ordering information
*Indicates factory selected value

Table 6-3. Replaceable Parts

Reference Designation	HP Part Number	C D	Qty	Description	Mfr Code	Mfr Part Number
A14R11	0698-3450	9		RESISTOR 42.2K 1% .125W F TC=0+-100	24546	C4-1/8-T0-4222-F
A14R12	0698-3450	9		RESISTOR 42.2K 1% .125W F TC=0+-100	24546	C4-1/8-T0-4222-F
A14R13	0698-3450	9		RESISTOR 42.2K 1% .125W F TC=0+-100	24546	C4-1/8-T0-4222-F
A14R14	0698-3260	9		RESISTOR 464K 1% .125W F TC=0+-100	28480	0698-3260
A14R15	0698-3260	9		RESISTOR 464K 1% .125W F TC=0+-100	28480	0698-3260
A14R16	0698-3260	9		RESISTOR 464K 1% .125W F TC=0+-100	28480	0698-3260
A14R17	0698-3450	9		RESISTOR 42.2K 1% .125W F TC=0+-100	24546	C4-1/8-T0-4222-F
A14R18	0698-3450	9		RESISTOR 42.2K 1% .125W F TC=0+-100	24546	C4-1/8-T0-4222-F
A14R19	0698-3450	9		RESISTOR 42.2K 1% .125W F TC=0+-100	24546	C4-1/8-T0-4222-F
A14R20	0698-3260	9		RESISTOR 464K 1% .125W F TC=0+-100	28480	0698-3260
A14R21	0698-3260	9		RESISTOR 464K 1% .125W F TC=0+-100	28480	0698-3260
A14R22	0698-3450	9		RESISTOR 42.2K 1% .125W F TC=0+-100	24546	C4-1/8-T0-4222-F
A14R23	0757-0439	4	1	RESISTOR 6.81K 1% .125W F TC=0+-100	24546	C4-1/8-T0-6811-F
A14R24	0757-0442	9	11	RESISTOR 10K 1% .125W F TC=0+-100	24546	C4-1/8-T0-1002-F
A14R25	0698-3450	9		RESISTOR 42.2K 1% .125W F TC=0+-100	24546	C4-1/8-T0-4222-F
A14R26	0757-0464	5	1	RESISTOR 90.9K 1% .125W F TC=0+-100	24546	C4-1/8-T0-9092-F
A14R27	0698-3450	9		RESISTOR 42.2K 1% .125W F TC=0+-100	24546	C4-1/8-T0-4222-F
A14R28	0698-3260	9		RESISTOR 464K 1% .125W F TC=0+-100	28480	0698-3260
A14R29	0698-3450	9		RESISTOR 42.2K 1% .125W F TC=0+-100	24546	C4-1/8-T0-4222-F
A14R30	0698-3454	3	1	RESISTOR 215K 1% .125W F TC=0+-100	24546	C4-1/8-T0-2153-F
A14R31	0698-3260	9		RESISTOR 464K 1% .125W F TC=0+-100	28480	0698-3260
A14R32	0698-3450	9		RESISTOR 42.2K 1% .125W F TC=0+-100	24546	C4-1/8-T0-4222-F
A14R33	0698-3450	9		RESISTOR 42.2K 1% .125W F TC=0+-100	24546	C4-1/8-T0-4222-F
A14R34	0757-0442	9		RESISTOR 10K 1% .125W F TC=0+-100	24546	C4-1/8-T0-1002-F
A14R35	0757-0442	9		RESISTOR 10K 1% .125W F TC=0+-100	24546	C4-1/8-T0-1002-F
A14R36	0757-0465	6	5	RESISTOR 100K 1% .125W F TC=0+-100	24546	C4-1/8-T0-1003-F
A14R37	0757-0465	6		RESISTOR 100K 1% .125W F TC=0+-100	24546	C4-1/8-T0-1003-F
A14R38	0698-3136	8	3	RESISTOR 17.8K 1% .125W F TC=0+-100	24546	C4-1/8-T0-1782-F
A14R39	0698-3457	6	2	RESISTOR 316K 1% .125W F TC=0+-100	28480	0698-3457
A14R40	0698-4002	9	1	RESISTOR 5K 1% .125W F TC=0+-100	24546	C4-1/8-T0-5001-F
A14R41	0757-0461	2	1	RESISTOR 68.1K 1% .125W F TC=0+-100	24546	C4-1/8-T0-6812-F
A14R42	0757-0442	9		RESISTOR 10K 1% .125W F TC=0+-100	24546	C4-1/8-T0-1002-F
A14R43	0757-0465	6		RESISTOR 100K 1% .125W F TC=0+-100	24546	C4-1/8-T0-1003-F
A14R44	0757-0442	9		RESISTOR 10K 1% .125W F TC=0+-100	24546	C4-1/8-T0-1002-F
A14R45	0698-3157	3	1	RESISTOR 19.6K 1% .125W F TC=0+-100	24546	C4-1/8-T0-1962-F
A14R46	0698-3449	6	1	RESISTOR 28.7K 1% .125W F TC=0+-100	24546	C4-1/8-T0-2872-F
A14R47	0698-3136	8		RESISTOR 17.8K 1% .125W F TC=0+-100	24546	C4-1/8-T0-1782-F
A14R48	0757-0465	6		RESISTOR 100K 1% .125W F TC=0+-100	24546	C4-1/8-T0-1003-F
A14R49	0698-3457	6		RESISTOR 316K 1% .125W F TC=0+-100	28480	0698-3457
A14R50	0757-0442	9		RESISTOR 10K 1% .125W F TC=0+-100	24546	C4-1/8-T0-1002-F
A14R51	0757-0447	4	1	RESISTOR 16.2K 1% .125W F TC=0+-100	24546	C4-1/8-T0-1622-F
A14R52	0757-0199	3	2	RESISTOR 21.5K 1% .125W F TC=0+-100	24546	C4-1/8-T0-2152-F
A14R53	0683-1555	0	1	RESISTOR 1.5M 5% .25W FC TC=-900/+1100	01121	CB1555
A14R54	0757-0446	3	1	RESISTOR 15K 1% .125W F TC=0+-100	24546	C4-1/8-T0-1502-F
A14R55	0698-3459	8	1	RESISTOR 383K 1% .125W F TC=0+-100	28480	0698-3459
A14R56	0757-0440	7	1	RESISTOR 7.5K 1% .125W F TC=0+-100	24546	C4-1/8-T0-7501-F
A14R57	2100-1739	0	1	RESISTOR-TRMR 5K 10% WW SIDE-ADJ 20-TRN	02660	3810P-502
A14R58	0757-0274	5	1	RESISTOR 1.21K 1% .125W F TC=0+-100	24546	C4-1/8-T0-1211-F
A14R59	0698-3452	1	2	RESISTOR 147K 1% .125W F TC=0+-100	24546	C4-1/8-T0-1473-F
A14R60	0698-3452	1		RESISTOR 147K 1% .125W F TC=0+-100	24546	C4-1/8-T0-1473-F
A14R61	0757-0466	7	1	RESISTOR 110K 1% .125W F TC=0+-100	24546	C4-1/8-T0-1103-F
A14R62	0757-0422	5	1	RESISTOR 909 1% .125W F TC=0+-100	24546	C4-1/8-T0-909R-F
A14R63	0757-0442	9		RESISTOR 10K 1% .125W F TC=0+-100	24546	C4-1/8-T0-1002-F
A14R64	0757-0279	0	1	RESISTOR 3.16K 1% .125W F TC=0+-100	24546	C4-1/8-T0-3161-F
A14R65	0757-0458	7	1	RESISTOR 51.1K 1% .125W F TC=0+-100	24546	C4-1/8-T0-5112-F
A14R66	0757-0442	9		RESISTOR 10K 1% .125W F TC=0+-100	24546	C4-1/8-T0-1002-F
A14R67	0757-0123	3	2	RESISTOR 34.8K 1% .125W F TC=0+-100	28480	0757-0123
A14R68	2100-1972	3	2	RESISTOR-TRMR 20K 10% WW SIDE-ADJ 20-TRN	02660	3810P-203
A14R69	0757-0123	3		RESISTOR 34.8K 1% .125W F TC=0+-100	28480	0757-0123
A14R70	0698-4008	5	1	RESISTOR 40K 1% .125W F TC=0+-100	24546	C4-1/8-T0-4002-F
A14R71	2100-1972	3		RESISTOR-TRMR 20K 10% WW SIDE-ADJ 20-TRN	02660	3810P-203
A14R72	0757-0199	3		RESISTOR 21.5K 1% .125W F TC=0+-100	24546	C4-1/8-T0-2152-F
A14R73	0698-6901	1	1	RESISTOR 32.8K .5% .125W F TC=0+-50	28480	0698-6901
A14R74	0698-8805	8	1	RESISTOR 10.35K .1% .125W F TC=0+-25	28480	0698-8805
A14R75	0698-3136	8		RESISTOR 17.8K 1% .125W F TC=0+-100	24546	C4-1/8-T0-1782-F
A14R76	0757-0288	1	1	RESISTOR 9.09K 1% .125W F TC=0+-100	19701	MF4C1/8-T0-9091-F
A14R77	0757-0442	9		RESISTOR 10K 1% .125W F TC=0+-100	24546	C4-1/8-T0-1002-F
A14R78	0757-0442	9		RESISTOR 10K 1% .125W F TC=0+-100	24546	C4-1/8-T0-1002-F
A14R79	0757-0401	0	4	RESISTOR 100 1% .125W F TC=0+-100	24546	C4-1/8-T0-101-F
A14R80	0757-0401	0		RESISTOR 100 1% .125W F TC=0+-100	24546	C4-1/8-T0-101-F
A14R81	0757-0442	9		RESISTOR 10K 1% .125W F TC=0+-100	24546	C4-1/8-T0-1002-F
A14R82	0698-3624	9	1	RESISTOR 150 5% 2W MO TC=0+-200	28480	0698-3624
A14R83	0757-0465	6		RESISTOR 100K 1% .125W F TC=0+-100	24546	C4-1/8-T0-1003-F
A14R84	0757-0449	6	1	RESISTOR 20K 1% .125W F TC=0+-100	24546	C4-1/8-T0-2002-F
A14R85	0757-0401	0		RESISTOR 100 1% .125W F TC=0+-100	24546	C4-1/8-T0-101-F

See introduction to this section for ordering information
*Indicates factory selected value

Table 6-3. Replaceable Parts

Reference Designation	HP Part Number	C D	Qty	Description	Mfr Code	Mfr Part Number
A14R86	0757-0346	2	2	RESISTOR 10 1% .125W F TC=0+-100	24546	C4-1/8-T0-10R0-F
A14R87	0757-0346	2		RESISTOR 10 1% .125W F TC=0+-100	24546	C4-1/8-T0-10R0-F
A14R88	0757-0401	0		RESISTOR 100 1% .125W F TC=0+-100	24546	C4-1/8-T0-101-F
A14R89	0757-0280	3	1	RESISTOR 1K 1% .125W F TC=0+-100	24546	C4-1/8-T0-1001-F
A14TP1	1251-0600	0	13	CONNECTOR-SGL CONT PIN 1.14-MM-BSC-SZ SQ	28480	1251-0600
A14TP2	1251-0600	0		CONNECTOR-SGL CONT PIN 1.14-MM-BSC-SZ SQ	28480	1251-0600
A14TP3	1251-0600	0		CONNECTOR-SGL CONT PIN 1.14-MM-BSC-SZ SQ	28480	1251-0600
A14TP4	0360-0077	5	1	TERMINAL-STUD SGL-TUR SWGFRM-MTG	28480	0360-0077
A14TP5	1251-0600	0		CONNECTOR-SGL CONT PIN 1.14-MM-BSC-SZ SQ	28480	1251-0600
A14TP6	1251-0600	0		CONNECTOR-SGL CONT PIN 1.14-MM-BSC-SZ SQ	28480	1251-0600
A14TP7	1251-0600	0		CONNECTOR-SGL CONT PIN 1.14-MM-BSC-SZ SQ	28480	1251-0600
A14TP8	1251-0600	0		CONNECTOR-SGL CONT PIN 1.14-MM-BSC-SZ SQ	28480	1251-0600
A14TP9	1251-0600	0		CONNECTOR-SGL CONT PIN 1.14-MM-BSC-SZ SQ	28480	1251-0600
A14TP10	1251-0600	0		CONNECTOR-SGL CONT PIN 1.14-MM-BSC-SZ SQ	28480	1251-0600
A14TP11	1251-0600	0		CONNECTOR-SGL CONT PIN 1.14-MM-BSC-SZ SQ	28480	1251-0600
A14TP12	1251-0600	0		CONNECTOR-SGL CONT PIN 1.14-MM-BSC-SZ SQ	28480	1251-0600
A14TP13	1251-0600	0		CONNECTOR-SGL CONT PIN 1.14-MM-BSC-SZ SQ	28480	1251-0600
A14TP14	1251-0600	0		CONNECTOR-SGL CONT PIN 1.14-MM-BSC-SZ SQ	28480	1251-0600
A14U1	1826-0261	8	7	IC OP AMP LOW-NOISE TO-99 PKG	28480	1826-0261
A14U2	1826-0261	8		IC OP AMP LOW-NOISE TO-99 PKG	28480	1826-0261
A14U3	5081-8117	3	1	IC-OP AMP GP DUAL TO-99 PKG	28480	5081-8117
A14U4	1826-0261	8		IC OP AMP LOW-NOISE TO-99 PKG	28480	1826-0261
A14U5	1826-0261	8		IC OP AMP LOW-NOISE TO-99 PKG	28480	1826-0261
A14U6	1826-0261	8		IC OP AMP LOW-NOISE TO-99 PKG	28480	1826-0261
A14U7	1826-0261	8		IC OP AMP LOW-NOISE TO-99 PKG	28480	1826-0261
A14U8	1826-0261	8		IC OP AMP LOW-NOISE TO-99 PKG	28480	1826-0261
			1	A14 MISCELLANEOUS PARTS		
	0340-0039	7	1	TERMINAL BUSHING - TEFLON; MOUNTS IN	28480	0340-0039
	1480-0073	6	2	PIN-ROLL .062-IN-DIA .25-IN-LG BE-CU	28480	1480-0073
	4040-0748	3	1	EXTR-PC BD BLK POLYC .062-BD-THKNS	28480	4040-0748
	4040-0751	8	1	EXTR-PC BD ORN POLYC .062-BD-THKNS	28480	4040-0751

See introduction to this section for ordering information
*Indicates factory selected value

Table 6-3. Replaceable Parts

Reference Designation	HP Part Number	C D	Qty	Description	Mfr Code	Mfr Part Number
A15	08565-60032	8		SWEEP ATTENUATOR ASSEMBLY	28480	08565-60032
A15C1	0160-3875	3	2	CAPACITOR-FXD 22PF +-5% 200VDC CER 0+-30	28480	0160-3875
A15C2	0160-3877	5	1	CAPACITOR-FXD 100PF +-20% 200VDC CER	28480	0160-3877
A15C3	0160-3875	3		CAPACITOR-FXD 22PF +-5% 200VDC CER 0+-30	28480	0160-3875
A15C4	0180-0197	8	2	CAPACITOR-FXD 2.2UF+-10% 20VDC TA	56289	150D225X9020A2
A15C5	0180-0197	8		CAPACITOR-FXD 2.2UF+-10% 20VDC TA	56289	150D225X9020A2
A15CR1	1901-0050	3	19	DIODE-SWITCHING 80V 200MA 2NS DO-35	28480	1901-0050
A15CR2	1901-0050	3		DIODE-SWITCHING 80V 200MA 2NS DO-35	28480	1901-0050
A15CR3	1901-0050	3		DIODE-SWITCHING 80V 200MA 2NS DO-35	28480	1901-0050
A15CR4	1901-0050	3		DIODE-SWITCHING 80V 200MA 2NS DO-35	28480	1901-0050
A15CR5	1901-0050	3		DIODE-SWITCHING 80V 200MA 2NS DO-35	28480	1901-0050
A15CR6	1901-0050	3		DIODE-SWITCHING 80V 200MA 2NS DO-35	28480	1901-0050
A15CR7	1901-0050	3		DIODE-SWITCHING 80V 200MA 2NS DO-35	28480	1901-0050
A15CR8	1901-0050	3		DIODE-SWITCHING 80V 200MA 2NS DO-35	28480	1901-0050
A15CR9	1901-0050	3		DIODE-SWITCHING 80V 200MA 2NS DO-35	28480	1901-0050
A15CR10	1901-0050	3		DIODE-SWITCHING 80V 200MA 2NS DO-35	28480	1901-0050
A15CR11	1901-0050	3		DIODE-SWITCHING 80V 200MA 2NS DO-35	28480	1901-0050
A15CR12	1901-0050	3		DIODE-SWITCHING 80V 200MA 2NS DO-35	28480	1901-0050
A15CR13	1901-0050	3		DIODE-SWITCHING 80V 200MA 2NS DO-35	28480	1901-0050
A15CR14	1901-0050	3		DIODE-SWITCHING 80V 200MA 2NS DO-35	28480	1901-0050
A15CR15	1901-0050	3		DIODE-SWITCHING 80V 200MA 2NS DO-35	28480	1901-0050
A15CR16	1901-0050	3		DIODE-SWITCHING 80V 200MA 2NS DO-35	28480	1901-0050
A15CR17	1901-0050	3		DIODE-SWITCHING 80V 200MA 2NS DO-35	28480	1901-0050
A15CR18	1901-0050	3		DIODE-SWITCHING 80V 200MA 2NS DO-35	28480	1901-0050
A15CR19	1901-0050	3		DIODE-SWITCHING 80V 200MA 2NS DO-35	28480	1901-0050
A15L1	9140-0210	1	2	INDUCTOR RF-CH-MLD 100UH 5% .166DX.385LG	28480	9140-0210
A15L2	9140-0210	1		INDUCTOR RF-CH-MLD 100UH 5% .166DX.385LG	28480	9140-0210
A15Q1	1855-0020	8	5	TRANSISTOR J-FET N-CHAN D-MODE TO-18 SI	28480	1855-0020
A15Q2	1855-0020	8		TRANSISTOR J-FET N-CHAN D-MODE TO-18 SI	28480	1855-0020
A15Q3	1854-0404	0	19	TRANSISTOR NPN SI TO-18 PD=360MW	28480	1854-0404
A15Q4	1854-0404	0		TRANSISTOR NPN SI TO-18 PD=360MW	28480	1854-0404
A15Q5	1854-0404	0		TRANSISTOR NPN SI TO-18 PD=360MW	28480	1854-0404
A15Q6	1854-0404	0		TRANSISTOR NPN SI TO-18 PD=360MW	28480	1854-0404
A15Q7	1854-0557	4	2	TRANSISTOR NPN 2N2432A SI TO-18 PD=300MW	01295	2N2432A
A15Q8	1855-0020	8		TRANSISTOR J-FET N-CHAN D-MODE TO-18 SI	28480	1855-0020
A15Q9	1855-0020	8		TRANSISTOR J-FET N-CHAN D-MODE TO-18 SI	28480	1855-0020
A15Q10	1855-0020	8		TRANSISTOR J-FET N-CHAN D-MODE TO-18 SI	28480	1855-0020
A15Q11	1854-0404	0		TRANSISTOR NPN SI TO-18 PD=360MW	28480	1854-0404
A15Q12	1854-0404	0		TRANSISTOR NPN SI TO-18 PD=360MW	28480	1854-0404
A15Q13	1854-0404	0		TRANSISTOR NPN SI TO-18 PD=360MW	28480	1854-0404
A15Q14	1854-0404	0		TRANSISTOR NPN SI TO-18 PD=360MW	28480	1854-0404
A15Q15	1854-0557	4		TRANSISTOR NPN 2N2432A SI TO-18 PD=300MW	01295	2N2432A
A15Q16	1853-0007	7	1	TRANSISTOR PNP 2N3251 SI TO-18 PD=360MW	04713	2N3251
A15Q17	1854-0404	0		TRANSISTOR NPN SI TO-18 PD=360MW	28480	1854-0404
A15Q18	1854-0404	0		TRANSISTOR NPN SI TO-18 PD=360MW	28480	1854-0404
A15Q19	1854-0404	0		TRANSISTOR NPN SI TO-18 PD=360MW	28480	1854-0404
A15Q20	1854-0404	0		TRANSISTOR NPN SI TO-18 PD=360MW	28480	1854-0404
A15Q21	1854-0404	0		TRANSISTOR NPN SI TO-18 PD=360MW	28480	1854-0404
A15Q22	1854-0404	0		TRANSISTOR NPN SI TO-18 PD=360MW	28480	1854-0404
A15Q23	1854-0404	0		TRANSISTOR NPN SI TO-18 PD=360MW	28480	1854-0404
A15Q24	1854-0404	0		TRANSISTOR NPN SI TO-18 PD=360MW	28480	1854-0404
A15Q25	1854-0404	0		TRANSISTOR NPN SI TO-18 PD=360MW	28480	1854-0404
A15Q26	1854-0404	0		TRANSISTOR NPN SI TO-18 PD=360MW	28480	1854-0404
A15Q27	1854-0404	0		TRANSISTOR NPN SI TO-18 PD=360MW	28480	1854-0404
A15R1	0698-6630	3	9	RESISTOR 20K .1% .125W F TC=0+-25	28480	0698-6630
A15R2	0757-0199	3	30	RESISTOR 21.5K 1% .125W F TC=0+-100	24546	C4-1/8-T0-2152-F
A15R3	0757-0199	3		RESISTOR 21.5K 1% .125W F TC=0+-100	24546	C4-1/8-T0-2152-F
A15R4	0698-3451	0	1	RESISTOR 133K 1% .125W F TC=0+-100	24546	C4-1/8-T0-1333-F
A15R5	0698-6630	3		RESISTOR 20K .1% .125W F TC=0+-25	28480	0698-6630
A15R6	0757-0199	3		RESISTOR 21.5K 1% .125W F TC=0+-100	24546	C4-1/8-T0-2152-F
A15R7	0757-0199	3		RESISTOR 21.5K 1% .125W F TC=0+-100	24546	C4-1/8-T0-2152-F
A15R8	0698-8847	8	2	RESISTOR 66.5K .25% .125W F TC=0+-100	28480	0698-8847
A15R9	0698-8861	6	1	RESISTOR 6.66K .1% .125W F TC=0+-25	28480	0698-8861
A15R10	0757-0199	3		RESISTOR 21.5K 1% .125W F TC=0+-100	24546	C4-1/8-T0-2152-F
A15R11	0757-0199	3		RESISTOR 21.5K 1% .125W F TC=0+-100	24546	C4-1/8-T0-2152-F
A15R12	0757-0442	9	5	RESISTOR 10K 1% .125W F TC=0+-100	24546	C4-1/8-T0-1002-F
A15R13	0757-0199	3		RESISTOR 21.5K 1% .125W F TC=0+-100	24546	C4-1/8-T0-2152-F
A15R14	0757-0199	3		RESISTOR 21.5K 1% .125W F TC=0+-100	24546	C4-1/8-T0-2152-F
A15R15	0757-0199	3		RESISTOR 21.5K 1% .125W F TC=0+-100	24546	C4-1/8-T0-2152-F
A15R16	0698-8847	8		RESISTOR 66.5K .25% .125W F TC=0+-100	28480	0698-8847
A15R17	0698-6630	3		RESISTOR 20K .1% .125W F TC=0+-25	28480	0698-6630
A15R18	0698-6353	7	1	RESISTOR 50K .1% .125W F TC=0+-25	28480	0698-6353
A15R19	0757-0465	6	6	RESISTOR 100K 1% .125W F TC=0+-100	24546	C4-1/8-T0-1003-F
A15R20	0757-0199	3		RESISTOR 21.5K 1% .125W F TC=0+-100	24546	C4-1/8-T0-2152-F

See introduction to this section for ordering information
*Indicates factory selected value

Table 6-3. Replaceable Parts

Reference Designation	HP Part Number	C D	Qty	Description	Mfr Code	Mfr Part Number
A15R21	0757-0199	3		RESISTOR 21.5K 1% .125W F TC=0+-100	24546	C4-1/8-T0-2152-F
A15R22	0698-6630	3		RESISTOR 20K .1% .125W F TC=0+-25	28480	0698-6630
A15R23	0698-6624	5	1	RESISTOR 2K .1% .125W F TC=0+-25	28480	0698-6624
A15R24	0757-0442	9		RESISTOR 10K 1% .125W F TC=0+-100	24546	C4-1/8-T0-1002-F
A15R25	0757-0465	6		RESISTOR 100K 1% .125W F TC=0+-100	24546	C4-1/8-T0-1003-F
A15R26	0757-0199	3		RESISTOR 21.5K 1% .125W F TC=0+-100	24546	C4-1/8-T0-2152-F
A15R27	0757-0199	3		RESISTOR 21.5K 1% .125W F TC=0+-100	24546	C4-1/8-T0-2152-F
A15R28	0698-6630	3		RESISTOR 20K .1% .125W F TC=0+-25	28480	0698-6630
A15R29	0698-6630	3		RESISTOR 20K .1% .125W F TC=0+-25	28480	0698-6630
A15R30	0757-0465	6		RESISTOR 100K 1% .125W F TC=0+-100	24546	C4-1/8-T0-1003-F
A15R31	0757-0199	3		RESISTOR 21.5K 1% .125W F TC=0+-100	24546	C4-1/8-T0-2152-F
A15R32	0757-0199	3		RESISTOR 21.5K 1% .125W F TC=0+-100	24546	C4-1/8-T0-2152-F
A15R33	0757-0199	3		RESISTOR 21.5K 1% .125W F TC=0+-100	24546	C4-1/8-T0-2152-F
A15R34	0757-0199	3		RESISTOR 21.5K 1% .125W F TC=0+-100	24546	C4-1/8-T0-2152-F
A15R35	0757-0458	7	2	RESISTOR 51.1K 1% .125W F TC=0+-100	24546	C4-1/8-T0-5112-F
A15R36	0757-0465	6		RESISTOR 100K 1% .125W F TC=0+-100	24546	C4-1/8-T0-1003-F
A15R37	0757-0199	3		RESISTOR 21.5K 1% .125W F TC=0+-100	24546	C4-1/8-T0-2152-F
A15R38	0698-8852	5	1	RESISTOR 28.6K .25% .125W F TC=0+-100	28480	0698-8852
A15R39	0698-6630	3		RESISTOR 20K .1% .125W F TC=0+-25	28480	0698-6630
A15R40	0698-6377	5	1	RESISTOR 200 .1% .125W F TC=0+-25	28480	0698-6377
A15R41	0757-0442	9		RESISTOR 10K 1% .125W F TC=0+-100	24546	C4-1/8-T0-1002-F
A15R42	0757-0465	6		RESISTOR 100K 1% .125W F TC=0+-100	24546	C4-1/8-T0-1003-F
A15R43	0757-0199	3		RESISTOR 21.5K 1% .125W F TC=0+-100	24546	C4-1/8-T0-2152-F
A15R44	0757-0199	3		RESISTOR 21.5K 1% .125W F TC=0+-100	24546	C4-1/8-T0-2152-F
A15R45	0698-6630	3		RESISTOR 20K .1% .125W F TC=0+-25	28480	0698-6630
A15R46	0698-6630	3		RESISTOR 20K .1% .125W F TC=0+-25	28480	0698-6630
A15R47	0757-0465	6		RESISTOR 100K 1% .125W F TC=0+-100	24546	C4-1/8-T0-1003-F
A15R48	0757-0199	3		RESISTOR 21.5K 1% .125W F TC=0+-100	24546	C4-1/8-T0-2152-F
A15R49	0757-0199	3		RESISTOR 21.5K 1% .125W F TC=0+-100	24546	C4-1/8-T0-2152-F
A15R50	0757-0199	3		RESISTOR 21.5K 1% .125W F TC=0+-100	24546	C4-1/8-T0-2152-F
A15R51	0757-0199	3		RESISTOR 21.5K 1% .125W F TC=0+-100	24546	C4-1/8-T0-2152-F
A15R52	0698-3194	8	2	RESISTOR 20K .25% .125W F TC=0+-50	03888	PME55-1/8-T2-2002-C
A15R53	2100-1972	3	1	RESISTOR-TRMR 20K 10% WW SIDE-ADJ 20-TRN	02660	3810P-203
A15R54	0757-0442	9		RESISTOR 10K 1% .125W F TC=0+-100	24546	C4-1/8-T0-1002-F
A15R55	0757-0442	9		RESISTOR 10K 1% .125W F TC=0+-100	24546	C4-1/8-T0-1002-F
A15R56	0757-0199	3		RESISTOR 21.5K 1% .125W F TC=0+-100	24546	C4-1/8-T0-2152-F
A15R57	0757-0458	7		RESISTOR 51.1K 1% .125W F TC=0+-100	24546	C4-1/8-T0-5112-F
A15R58	0757-0199	3		RESISTOR 21.5K 1% .125W F TC=0+-100	24546	C4-1/8-T0-2152-F
A15R59	0757-0199	3		RESISTOR 21.5K 1% .125W F TC=0+-100	24546	C4-1/8-T0-2152-F
A15R60	0757-0199	3		RESISTOR 21.5K 1% .125W F TC=0+-100	24546	C4-1/8-T0-2152-F
A15R61	0757-0199	3		RESISTOR 21.5K 1% .125W F TC=0+-100	24546	C4-1/8-T0-2152-F
A15R62	0698-3194	8		RESISTOR 20K .25% .125W F TC=0+-50	03888	PME55-1/8-T2-2002-C
A15R63	0757-0199	3		RESISTOR 21.5K 1% .125W F TC=0+-100	24546	C4-1/8-T0-2152-F
A15TP1	0360-0077	5	1	TERMINAL-STUD SGL-TUR SWGFRM-MTG	28480	0360-0077
A15TP2	1251-0600	0	6	CONNECTOR-SGL CONT PIN 1.14-MM-BSC-SZ SQ	28480	1251-0600
A15TP3	1251-0600	0		CONNECTOR-SGL CONT PIN 1.14-MM-BSC-SZ SQ	28480	1251-0600
A15TP4	1251-0600	0		CONNECTOR-SGL CONT PIN 1.14-MM-BSC-SZ SQ	28480	1251-0600
A15TP5	1251-0600	0		CONNECTOR-SGL CONT PIN 1.14-MM-BSC-SZ SQ	28480	1251-0600
A15TP6	1251-0600	0		CONNECTOR-SGL CONT PIN 1.14-MM-BSC-SZ SQ	28480	1251-0600
A15TP7	1251-0600	0		CONNECTOR-SGL CONT PIN 1.14-MM-BSC-SZ SQ	28480	1251-0600
A15U1	1826-0261	8	5	IC OP AMP LOW-NOISE TO-99 PKG	28480	1826-0261
A15U2	1826-0261	8		IC OP AMP LOW-NOISE TO-99 PKG	28480	1826-0261
A15U3	1826-0261	8		IC OP AMP LOW-NOISE TO-99 PKG	28480	1826-0261
A15U4	1826-0261	8		IC OP AMP LOW-NOISE TO-99 PKG	28480	1826-0261
A15U5	1826-0261	8		IC OP AMP LOW-NOISE TO-99 PKG	28480	1826-0261
A15VR1	1902-3104	6	3	DIODE-ZNR 5.62V 5% DO-35 PD=.4W	28480	1902-3104
A15VR2	1902-3104	6		DIODE-ZNR 5.62V 5% DO-35 PD=.4W	28480	1902-3104
A15VR3	1902-3104	6		DIODE-ZNR 5.62V 5% DO-35 PD=.4W	28480	1902-3104
A15VR4	1902-3059	0	1	DIODE-ZNR 3.83V 5% DO-35 PD=.4W	28480	1902-3059
				A15 MISCELLANEOUS PARTS		
	1480-0073	6	2	PIN-ROLL .062-IN-DIA .25-IN-LG BE-CU	28480	1480-0073
	4040-0748	3	1	EXTR-PC BD BLK POLYC .062-BD-THKNS	28480	4040-0748
	4040-0752	9	1	EXTR-PC BD YEL POLYC .062-BD-THKNS	28480	4040-0752

See introduction to this section for ordering information
*Indicates factory selected value

Table 6-3. Replaceable Parts

Reference Designation	HP Part Number	C D	Qty	Description	Mfr Code	Mfr Part Number
A16	08569-60067	3	1	SWEEP GENERATOR ASSEMBLY	28480	08569-60067
A16C1	0180-0197	8	6	CAPACITOR-FXD 2.2UF+-10% 20VDC TA	56289	150D225X9020A2
A16C2	0160-3456	6	4	CAPACITOR-FXD 1000PF +-10% 1KVDC CER	28480	0160-3456
A16C3	0160-3456	6		CAPACITOR-FXD 1000PF +-10% 1KVDC CER	28480	0160-3456
A16C4	0160-2262	0	1	CAPACITOR-FXD 16PF +-5% 500VDC CER 0+-30	28480	0160-2262
A16C5	0160-3466	8	3	CAPACITOR-FXD 100PF +-10% 1KVDC CER	28480	0160-3466
A16C6	0160-2150	5	1	CAPACITOR-FXD 33PF +-5% 300VDC MICA	28480	0160-2150
A16C7	0160-3466	8		CAPACITOR-FXD 100PF +-10% 1KVDC CER	28480	0160-3466
A16C8	0180-0197	8		CAPACITOR-FXD 2.2UF+-10% 20VDC TA	56289	150D225X9020A2
A16C9	0160-2307	4	1	CAPACITOR-FXD 47PF +-5% 300VDC MICA	28480	0160-2307
A16C10	0160-3456	6		CAPACITOR-FXD 1000PF +-10% 1KVDC CER	28480	0160-3456
A16C11	0180-1735	2	1	CAPACITOR-FXD .22UF+-10% 35VDC TA	56289	150D224X9035A2
A16C12	0160-3009	5	1	CAPACITOR-FXD 982PF +-1% 100VDC MICA	28480	0160-3009
A16C13	0160-3402	2	1	CAPACITOR-FXD 1UF +-5% 50VDC MET-POLYC	28480	0160-3402
A16C14	0180-0197	8		CAPACITOR-FXD 2.2UF+-10% 20VDC TA	56289	150D225X9020A2
A16C15	0160-0166	9	1	CAPACITOR-FXD .068UF +-10% 200VDC POLYE	28480	0160-0166
A16C16	0160-2055	9	3	CAPACITOR-FXD .01UF +80-20% 100VDC CER	28480	0160-2055
A16C17	0160-4084	8	3	CAPACITOR-FXD .1UF +-20% 50VDC CER	28480	0160-4084
A16C18	0160-2055	9		CAPACITOR-FXD .01UF +80-20% 100VDC CER	28480	0160-2055
A16C19	0160-2055	9		CAPACITOR-FXD .01UF +80-20% 100VDC CER	28480	0160-2055
A16C20	0160-3466	8		CAPACITOR-FXD 100PF +-10% 1KVDC CER	28480	0160-3466
A16C21	0160-4084	8		CAPACITOR-FXD .1UF +-20% 50VDC CER	28480	0160-4084
A16C22	0160-4084	8		CAPACITOR-FXD .1UF +-20% 50VDC CER	28480	0160-4084
A16C23	0160-3456	6		CAPACITOR-FXD 1000PF +-10% 1KVDC CER	28480	0160-3456
A16C24	0180-0197	8		CAPACITOR-FXD 2.2UF+-10% 20VDC TA	56289	150D225X9020A2
A16C25	0180-0197	8		CAPACITOR-FXD 2.2UF+-10% 20VDC TA	56289	150D225X9020A2
A16C26	0180-0197	8		CAPACITOR-FXD 2.2UF+-10% 20VDC TA	56289	150D225X9020A2
A16C27	0160-3670	6	1	CAPACITOR-FXD .1UF +-20% 200VDC CER	28480	0160-3670
A16CR1	1901-0050	3	35	DIODE-SWITCHING 80V 200MA 2NS DO-35	28480	1901-0050
A16CR2	1901-0050	3		DIODE-SWITCHING 80V 200MA 2NS DO-35	28480	1901-0050
A16CR3	1901-0376	6	1	DIODE-GEN PRP 35V 50MA DO-35	28480	1901-0376
A16CR4— A16CR36	1901-0050	3		DIODE-SWITCHING 80V 200MA 2NS DO-35	28480	1901-0050
A16L1	9140-0210	1	3	INDUCTOR RF-CH-MLD 100UH 5% .166DX.385LG	28480	9140-0210
A16L2	9140-0210	1		INDUCTOR RF-CH-MLD 100UH 5% .166DX.385LG	28480	9140-0210
A16L3	9140-0210	1		INDUCTOR RF-CH-MLD 100UH 5% .166DX.385LG	28480	9140-0210
A16L4	9140-0237	2	1	INDUCTOR RF-CH-MLD 200UH 5% .166DX.385LG	28480	9140-0237
A16MP1	1205-0202	1	1	THERMAL LINK DUAL TO-18-CS	28480	1205-0202
A16MP2	1480-0073	6	2	PIN-ROLL .062-IN-DIA .25-IN-LG BE-CU	28480	1480-0073
A16MP3	4040-0748	3	1	EXTR-PC BD BLK POLYC .062-BD-THKNS	28480	4040-0748
A16MP4	4040-0753	0	1	EXTR-PC BD GRN POLYC .062-BD-THKNS	28480	4040-0753
A16Q1	1854-0404	0	25	TRANSISTOR NPN SI TO-18 PD=360MW	28480	1854-0404
A16Q2	1855-0417	7	1	TRANSISTOR J-FET N-CHAN D-MODE TO-18 SI	28480	1855-0417
A16Q3	1854-0404	0		TRANSISTOR NPN SI TO-18 PD=360MW	28480	1854-0404
A16Q4	1854-0404	0		TRANSISTOR NPN SI TO-18 PD=360MW	28480	1854-0404
A16Q5	1854-0404	0		TRANSISTOR NPN SI TO-18 PD=360MW	28480	1854-0404
A16Q6	1853-0281	9	4	TRANSISTOR PNP 2N2907A SI TO-18 PD=400MW	04713	2N2907A
A16Q7	1854-0404	0		TRANSISTOR NPN SI TO-18 PD=360MW	28480	1854-0404
A16Q8	1855-0020	8	1	TRANSISTOR J-FET N-CHAN D-MODE TO-18 SI	28480	1855-0020
A16Q9	1853-0281	9		TRANSISTOR PNP 2N2907A SI TO-18 PD=400MW	04713	2N2907A
A16Q10	1854-0404	0		TRANSISTOR NPN SI TO-18 PD=360MW	28480	1854-0404
A16Q11	1853-0316	1	1	TRANSISTOR-DUAL PNP PD=500MW	28480	1853-0316
A16Q12	1855-0082	2	2	TRANSISTOR J-FET P-CHAN D-MODE SI	28480	1855-0082
A16Q13	1854-0404	0		TRANSISTOR NPN SI TO-18 PD=360MW	28480	1854-0404
A16Q14	1854-0404	0		TRANSISTOR NPN SI TO-18 PD=360MW	28480	1854-0404
A16Q15	1854-0404	0		TRANSISTOR NPN SI TO-18 PD=360MW	28480	1854-0404
A16Q16	1855-0082	2		TRANSISTOR J-FET P-CHAN D-MODE SI	28480	1855-0082
A16Q17	1854-0404	0		TRANSISTOR NPN SI TO-18 PD=360MW	28480	1854-0404
A16Q18	1854-0404	0		TRANSISTOR NPN SI TO-18 PD=360MW	28480	1854-0404
A16Q19	1853-0281	9		TRANSISTOR PNP 2N2907A SI TO-18 PD=400MW	04713	2N2907A
A16Q20	1854-0404	0		TRANSISTOR NPN SI TO-18 PD=360MW	28480	1854-0404
A16Q21	1854-0404	0		TRANSISTOR NPN SI TO-18 PD=360MW	28480	1854-0404
A16Q22	1854-0404	0		TRANSISTOR NPN SI TO-18 PD=360MW	28480	1854-0404
A16Q23	1854-0404	0		TRANSISTOR NPN SI TO-18 PD=360MW	28480	1854-0404
A16Q24	1854-0404	0		TRANSISTOR NPN SI TO-18 PD=360MW	28480	1854-0404
A16Q25	1854-0404	0		TRANSISTOR NPN SI TO-18 PD=360MW	28480	1854-0404
A16Q26	1854-0404	0		TRANSISTOR NPN SI TO-18 PD=360MW	28480	1854-0404
A16Q27	1854-0404	0		TRANSISTOR NPN SI TO-18 PD=360MW	28480	1854-0404
A16Q28	1854-0404	0		TRANSISTOR NPN SI TO-18 PD=360MW	28480	1854-0404
A16Q29	1854-0404	0		TRANSISTOR NPN SI TO-18 PD=360MW	28480	1854-0404
A16Q30	1854-0404	0		TRANSISTOR NPN SI TO-18 PD=360MW	28480	1854-0404

See introduction to this section for ordering information
*Indicates factory selected value

Table 6-3. Replaceable Parts

Reference Designation	HP Part Number	C D	Qty	Description	Mfr Code	Mfr Part Number
A16Q31	1854-0404	0		TRANSISTOR NPN SI TO-18 PD=360MW	28480	1854-0404
A16Q32	1854-0404	0		TRANSISTOR NPN SI TO-18 PD=360MW	28480	1854-0404
A16Q33	1853-0036	2		TRANSISTOR PNP SI PD=310MW FT=250MHZ	28480	1853-0036
A16Q34	1854-0404	0		TRANSISTOR NPN SI TO-18 PD=360MW	28480	1854-0404
A16R1	0698-3451	0	1	RESISTOR 133K 1% .125W F TC=0+-100	24546	C4-1/8-T0-1333-F
A16R2	0698-8848	9	1	RESISTOR 57.2K .25% .125W F TC=0+-100	28480	0698-8848
A16R3	0698-7421	2	1	RESISTOR 40K .25% .125W F TC=0+-100	19701	MF4C1/8-T0-4002-C
A16R4	0698-3194	8	1	RESISTOR 20K .25% .125W F TC=0+-50	03888	PME55-1/8-T2-2002-C
A16R5	0698-7797	5	1	RESISTOR 7.68K .25% .125W F TC=0+-100	19701	MF4C1/8-T0-7681-C
A16R6	0757-0442	9	9	RESISTOR 10K 1% .125W F TC=0+-100	24546	C4-1/8-T0-1002-F
A16R7	0757-0442	9		RESISTOR 10K 1% .125W F TC=0+-100	24546	C4-1/8-T0-1002-F
A16R8	0698-3450	9	3	RESISTOR 42.2K 1% .125W F TC=0+-100	24546	C4-1/8-T0-4222-F
A16R9	2100-2852	0	1	RESISTOR-TRMR 1K 10% WW SIDE-ADJ 20-TRN	02660	3810P-102
A16R10	0757-0279	0	3	RESISTOR 3.16K 1% .125W F TC=0+-100	24546	C4-1/8-T0-3161-F
A16R11	0757-0459	8	1	RESISTOR 56.2K 1% .125W F TC=0+-100	24546	C4-1/8-T0-5622-F
A16R12	0698-3152	8	1	RESISTOR 3.48K 1% .125W F TC=0+-100	24546	C4-1/8-T0-3481-F
A16R13	0757-0442	9		RESISTOR 10K 1% .125W F TC=0+-100	24546	C4-1/8-T0-1002-F
A16R14	0757-0289	2	2	RESISTOR 13.3K 1% .125W F TC=0+-100	19701	MF4C1/8-T0-1332-F
A16R15	2100-2851	9	2	RESISTOR-TRMR 2K 10% WW SIDE-ADJ 20-TRN	02660	3810P-202
A16R16	0698-3457	6	3	RESISTOR 316K 1% .125W F TC=0+-100	28480	0698-3457
A16R17	0757-0346	2	3	RESISTOR 10 1% .125W F TC=0+-100	24546	C4-1/8-T0-10R0-F
A16R18	0698-3442	9	1	RESISTOR 237 1% .125W F TC=0+-100	24546	C4-1/8-T0-237R-F
A16R19	2100-1702	7	1	RESISTOR-TRMR 100 10% WW SIDE-ADJ 20-TRN	02660	3810P-101
A16R20	0698-3156	2	3	RESISTOR 14.7K 1% .125W F TC=0+-100	24546	C4-1/8-T0-1472-F
A16R21	0698-4482	9	1	RESISTOR 17.4K 1% .125W F TC=0+-100	03888	PME55-1/8-T0-1742-F
A16R22	0757-0465	6	16	RESISTOR 100K 1% .125W F TC=0+-100	24546	C4-1/8-T0-1003-F
A16R23	0757-0280	3	5	RESISTOR 1K 1% .125W F TC=0+-100	24546	C4-1/8-T0-1001-F
A16R24	0698-3156	2		RESISTOR 14.7K 1% .125W F TC=0+-100	24546	C4-1/8-T0-1472-F
A16R25	2100-2851	9		RESISTOR-TRMR 2K 10% WW SIDE-ADJ 20-TRN	02660	3810P-202
A16R26	0757-0465	6		RESISTOR 100K 1% .125W F TC=0+-100	24546	C4-1/8-T0-1003-F
A16R27	0757-0401	0	2	RESISTOR 100 1% .125W F TC=0+-100	24546	C4-1/8-T0-101-F
A16R28	0757-0465	6		RESISTOR 100K 1% .125W F TC=0+-100	24546	C4-1/8-T0-1003-F
A16R29	0757-0123	3	2	RESISTOR 34.8K 1% .125W F TC=0+-100	28480	0757-0123
A16R30	0698-3519	1	1	RESISTOR 12.4K 1% .125W F TC=0+-100	24546	C4-1/8-T0-1242-F
A16R31	0757-0440	7	1	RESISTOR 7.5K 1% .125W F TC=0+-100	24546	C4-1/8-T0-7501-F
A16R32	0757-0199	3	8	RESISTOR 21.5K 1% .125W F TC=0+-100	24546	C4-1/8-T0-2152-F
A16R33	0757-0465	6		RESISTOR 100K 1% .125W F TC=0+-100	24546	C4-1/8-T0-1003-F
A16R34	0698-3160	8	6	RESISTOR 31.6K 1% .125W F TC=0+-100	24546	C4-1/8-T0-3162-F
A16R35	0757-0465	6		RESISTOR 100K 1% .125W F TC=0+-100	24546	C4-1/8-T0-1003-F
A16R36	0757-0465	6		RESISTOR 100K 1% .125W F TC=0+-100	24546	C4-1/8-T0-1003-F
A16R37	0757-0465	6		RESISTOR 100K 1% .125W F TC=0+-100	24546	C4-1/8-T0-1003-F
A16R38	0698-3160	8		RESISTOR 31.6K 1% .125W F TC=0+-100	24546	C4-1/8-T0-3162-F
A16R39	0698-7268	5	7	RESISTOR 21.5K 1% .05W F TC=0+-100	24546	C3-1/8-T0-2152-F
A16R40	0757-0465	6		RESISTOR 100K 1% .125W F TC=0+-100	24546	C4-1/8-T0-1003-F
A16R41	0757-0465	6		RESISTOR 100K 1% .125W F TC=0+-100	24546	C4-1/8-T0-1003-F
A16R42	0699-1023	0	1	RESISTOR-1.326K OHM .25% .12W	28480	0699-1023
A16R43	0698-7288	9	8	RESISTOR 147K 1% .05W F TC=0+-100	24546	C3-1/8-T0-1473-F
A16R44	0698-7288	9		RESISTOR 147K 1% .05W F TC=0+-100	24546	C3-1/8-T0-1473-F
A16R45	0698-7288	9		RESISTOR 147K 1% .05W F TC=0+-100	24546	C3-1/8-T0-1473-F
A16R46	0698-7288	9		RESISTOR 147K 1% .05W F TC=0+-100	24546	C3-1/8-T0-1473-F
A16R47	0757-0461	2	3	RESISTOR 68.1K 1% .125W F TC=0+-100	24546	C4-1/8-T0-6812-F
A16R48	0698-7288	9		RESISTOR 147K 1% .05W F TC=0+-100	24546	C3-1/8-T0-1473-F
A16R49	0757-0465	6		RESISTOR 100K 1% .125W F TC=0+-100	24546	C4-1/8-T0-1003-F
A16R50	0757-0465	6		RESISTOR 100K 1% .125W F TC=0+-100	24546	C4-1/8-T0-1003-F
A16R51	0698-7288	9		RESISTOR 147K 1% .05W F TC=0+-100	24546	C3-1/8-T0-1473-F
A16R52	0698-7288	9		RESISTOR 147K 1% .05W F TC=0+-100	24546	C3-1/8-T0-1473-F
A16R53	0757-0461	2		RESISTOR 68.1K 1% .125W F TC=0+-100	24546	C4-1/8-T0-6812-F
A16R54	0698-7288	9		RESISTOR 147K 1% .05W F TC=0+-100	24546	C3-1/8-T0-1473-F
A16R55	0757-0461	2		RESISTOR 68.1K 1% .125W F TC=0+-100	24546	C4-1/8-T0-6812-F
A16R56	0698-0084	9	1	RESISTOR 2.15K 1% .125W F TC=0+-100	24546	C4-1/8-T0-2151-F
A16R57	0757-0280	3		RESISTOR 1K 1% .125W F TC=0+-100	24546	C4-1/8-T0-1001-F
A16R58	0698-3444	1	1	RESISTOR 316 1% .125W F TC=0+-100	24546	C4-1/8-T0-316R-F
A16R59	0698-5469	4	1	RESISTOR 8.665K 1% .125W F TC=0+-100	24546	C4-1/8-T0-8665R-F
A16R60	0698-8849	0	1	RESISTOR 45.3K .1% .125W F TC=0+-25	28480	0698-8849
A16R61	0698-6360	6	2	RESISTOR 10K .1% .125W F TC=0+-25	28480	0698-6360
A16R62	0757-0346	2		RESISTOR 10 1% .125W F TC=0+-100	24546	C4-1/8-T0-10R0-F
A16R63	0683-3355	2	2	RESISTOR 3.3M 5% .25W FC TC=-900/+1100	01121	CB3355
A16R64	0683-3355	2		RESISTOR 3.3M 5% .25W FC TC=-900/+1100	01121	CB3355
A16R65	0757-0288	1	1	RESISTOR 9.09K 1% .125W F TC=0+-100	19701	MF4C1/8-T0-9091-F
A16R66	0698-8862	7	1	RESISTOR 5.8K .1% .125W F TC=0+-25	28480	0698-8862
A16R67	0757-0442	9		RESISTOR 10K 1% .125W F TC=0+-100	24546	C4-1/8-T0-1002-F
A16R68	0757-0442	9		RESISTOR 10K 1% .125W F TC=0+-100	24546	C4-1/8-T0-1002-F
A16R69	0698-3457	6		RESISTOR 316K 1% .125W F TC=0+-100	28480	0698-3457
A16R70	0698-3160	8		RESISTOR 31.6K 1% .125W F TC=0+-100	24546	C4-1/8-T0-3162-F

See introduction to this section for ordering information
*Indicates factory selected value

Table 6-3. Replaceable Parts

Reference Designation	HP Part Number	C D	Qty	Description	Mfr Code	Mfr Part Number
A16R71	0757-0442	9		RESISTOR 10K 1% .125W F TC=0+-100	24546	C4-1/8-T0-1002-F
A16R72	0698-3457	6		RESISTOR 316K 1% .125W F TC=0+-100	28480	0698-3457
A16R73	0683-6845	1	1	RESISTOR 680K 5% .25W FC TC=-800/+900	01121	CB6845
A16R74	2100-1973	4	1	RESISTOR-TRMR 200 10% WW TOP-ADJ 20-TRN	02660	3810P-201
A16R75	0757-0401	0		RESISTOR 100 1% .125W F TC=0+-100	24546	C4-1/8-T0-101-F
A16R76	0698-3160	8		RESISTOR 31.6K 1% .125W F TC=0+-100	24546	C4-1/8-T0-3162-F
A16R77	0757-0442	9		RESISTOR 10K 1% .125W F TC=0+-100	24546	C4-1/8-T0-1002-F
A16R78	0757-0465	6		RESISTOR 100K 1% .125W F TC=0+-100	24546	C4-1/8-T0-1003-F
A16R79	0757-0465	6		RESISTOR 100K 1% .125W F TC=0+-100	24546	C4-1/8-T0-1003-F
A16R80	0698-3155	1	1	RESISTOR 4.64K 1% .125W F TC=0+-100	24546	C4-1/8-T0-4641-F
A16R81	0698-3260	9	2	RESISTOR 464K 1% .125W F TC=0+-100	28480	0698-3260
A16R82	0698-3160	8		RESISTOR 31.6K 1% .125W F TC=0+-100	24546	C4-1/8-T0-3162-F
A16R83	0757-0279	0		RESISTOR 3.16K 1% .125W F TC=0+-100	24546	C4-1/8-T0-3161-F
A16R84	0757-0465	6		RESISTOR 100K 1% .125W F TC=0+-100	24546	C4-1/8-T0-1003-F
A16R85	0698-3160	8		RESISTOR 31.6K 1% .125W F TC=0+-100	24546	C4-1/8-T0-3162-F
A16R86	0757-0279	0		RESISTOR 3.16K 1% .125W F TC=0+-100	24546	C4-1/8-T0-3161-F
A16R87	0757-0465	6		RESISTOR 100K 1% .125W F TC=0+-100	24546	C4-1/8-T0-1003-F
A16R88	0757-0439	4	1	RESISTOR 6.81K 1% .125W F TC=0+-100	24546	C4-1/8-T0-6811-F
A16R89	0698-3159	5	1	RESISTOR 26.1K 1% .125W F TC=0+-100	24546	C4-1/8-T0-2612-F
A16R90	0698-3450	9		RESISTOR 42.2K 1% .125W F TC=0+-100	24546	C4-1/8-T0-4222-F
A16R91	0757-0465	6		RESISTOR 100K 1% .125W F TC=0+-100	24546	C4-1/8-T0-1003-F
A16R92	0757-0346	2		RESISTOR 10 1% .125W F TC=0+-100	24546	C4-1/8-T0-10R0-F
A16R93	0698-3450	9		RESISTOR 42.2K 1% .125W F TC=0+-100	24546	C4-1/8-T0-4222-F
A16R94	0698-7864	7	1	RESISTOR 794 .25% .125W F TC=0+-100	19701	MF4C1/8-T0-794R-C
A16R95	0757-0199	3		RESISTOR 21.5K 1% .125W F TC=0+-100	24546	C4-1/8-T0-2152-F
A16R96	0757-0289	2		RESISTOR 13.3K 1% .125W F TC=0+-100	19701	MF4C1/8-T0-1332-F
A16R97	0757-0458	7	1	RESISTOR 51.1K 1% .125W F TC=0+-100	24546	C4-1/8-T0-5112-F
A16R98	0757-0442	9		RESISTOR 10K 1% .125W F TC=0+-100	24546	C4-1/8-T0-1002-F
A16R99	0757-0123	3		RESISTOR 34.8K 1% .125W F TC=0+-100	28480	0757-0123
A16R100	0757-0200	7	1	RESISTOR 5.62K 1% .125W F TC=0+-100	24546	C4-1/8-T0-5621-F
A16R101	0698-6630	3	2	RESISTOR 20K .1% .125W F TC=0+-25	28480	0698-6630
A16R102	0757-0199	3		RESISTOR 21.5K 1% .125W F TC=0+-100	24546	C4-1/8-T0-2152-F
A16R103	0698-7268	5		RESISTOR 21.5K 1% .05W F TC=0+-100	24546	C3-1/8-T0-2152-F
A16R104	0698-6630	3		RESISTOR 20K .1% .125W F TC=0+-25	28480	0698-6630
A16R105	0757-0199	3		RESISTOR 21.5K 1% .125W F TC=0+-100	24546	C4-1/8-T0-2152-F
A16R106	0698-7268	5		RESISTOR 21.5K 1% .05W F TC=0+-100	24546	C3-1/8-T0-2152-F
A16R107	0698-6360	6		RESISTOR 10K .1% .125W F TC=0+-25	28480	0698-6360
A16R108	0757-0199	3		RESISTOR 21.5K 1% .125W F TC=0+-100	24546	C4-1/8-T0-2152-F
A16R109	0698-7268	5		RESISTOR 21.5K 1% .05W F TC=0+-100	24546	C3-1/8-T0-2152-F
A16R110	0698-8861	6	1	RESISTOR 6.66K .1% .125W F TC=0+-25	28480	0698-8861
A16R111	0757-0199	3		RESISTOR 21.5K 1% .125W F TC=0+-100	24546	C4-1/8-T0-2152-F
A16R112	0698-7268	5		RESISTOR 21.5K 1% .05W F TC=0+-100	24546	C3-1/8-T0-2152-F
A16R113	0698-3237	0	1	RESISTOR 5K .25% .125W F TC=0+-50	28480	0698-3237
A16R114	0757-0199	3		RESISTOR 21.5K 1% .125W F TC=0+-100	24546	C4-1/8-T0-2152-F
A16R115	0698-7268	5		RESISTOR 21.5K 1% .05W F TC=0+-100	24546	C3-1/8-T0-2152-F
A16R116	0698-8172	2	1	RESISTOR 4K .25% .125W F TC=0+-50	19701	MF4C1/8-T2-4001-C
A16R117	0757-0199	3		RESISTOR 21.5K 1% .125W F TC=0+-100	24546	C4-1/8-T0-2152-F
A16R118	0698-7268	5		RESISTOR 21.5K 1% .05W F TC=0+-100	24546	C3-1/8-T0-2152-F
A16R119	0698-8868	3	1	RESISTOR 2.215K .25% .125W F TC=0+-100	28480	0698-8868
A16R121	0698-3156	2		RESISTOR 14.7K 1% .125W F TC=0+-100	24546	C4-1/8-T0-1472-F
A16R122	0757-0280	3		RESISTOR 1K 1% .125W F TC=0+-100	24546	C4-1/8-T0-1001-F
A16R123	0698-3260	9		RESISTOR 464K 1% .125W F TC=0+-100	28480	0698-3260
A16R124	0757-0280	3		RESISTOR 1K 1% .125W F TC=0+-100	24546	C4-1/8-T0-1001-F
A16R125	0757-0280	3		RESISTOR 1K 1% .125W F TC=0+-100	24546	C4-1/8-T0-1001-F
A16R126	0757-0442	9		RESISTOR 10K 1% .125W F TC=0+-100	24546	C4-1/8-T0-1002-F
A16R127	0698-3167	5	2	RESISTOR 25K 1% .125W F TC=0+-100	24546	C4-1/8-T0-2502-F
A16R128	0757-0462	3	2	RESISTOR 75K 1% .125W F TC=0+-100	24546	C4-1/8-T0-7502-F
A16R129				NOT ASSIGNED		
A16R129	0757-0462	3		RESISTOR 75K 1% .125W F TC=0+-100	24546	C4-1/8-T0-7502-F
A16R130	0698-3167	5		RESISTOR 25K 1% .125W F TC=0+-100	24546	C4-1/8-T0-2502-F
A16R131	2100-3109	2	1	RESISTOR-TRMR 2K 10% C SIDE-ADJ 17-TRN	02111	43P202
A16TP1	1251-0600	0	6	CONNECTOR-SGL CONT PIN 1.14-MM-BSC-SZ SQ	28480	1251-0600
A16TP2	1251-0600	0		CONNECTOR-SGL CONT PIN 1.14-MM-BSC-SZ SQ	28480	1251-0600
A16TP3	1251-0600	0		CONNECTOR-SGL CONT PIN 1.14-MM-BSC-SZ SQ	28480	1251-0600
A16TP4	0360-0077	5	1	TERMINAL-STUD SGL-TUR SWGFRM-MTG	28480	0360-0077
A16TP5	1251-0600	0		CONNECTOR-SGL CONT PIN 1.14-MM-BSC-SZ SQ	28480	1251-0600
A16TP6	1251-0600	0		CONNECTOR-SGL CONT PIN 1.14-MM-BSC-SZ SQ	28480	1251-0600
A16TP7	1251-0600	0		CONNECTOR-SGL CONT PIN 1.14-MM-BSC-SZ SQ	28480	1251-0600
A16U1	1826-0261	8	1	IC OP AMP LOW-NOISE TO-99 PKG	28480	1826-0261
A16U2	1826-0092	3	2	IC OP AMP GP DUAL TO-99 PKG	28480	1826-0092
A16U3	1820-0223	0	1	IC OP AMP GP TO-99 PKG	3L585	CA301AT
A16U4	1826-0026	3	1	IC COMPARATOR PRCN TO-99 PKG	01295	LM311L
A16U5	1820-1550	8	1	IC GATE CMOS OR QUAD 2-INP	3L585	CD4071BF

See introduction to this section for ordering information
*Indicates factory selected value

Table 6-3. Replaceable Parts

Reference Designation	HP Part Number	C D	Qty	Description	Mfr Code	Mfr Part Number
A16U6	1820-1551	9	2	IC GATE CMOS AND QUAD 2-INP	3L585	CD4081BF
A16U7	1820-1551	9		IC GATE CMOS AND QUAD 2-INP	3L585	CD4081BF
A16U8	1820-1592	8	1	IC INV CMOS HEX 1-INP	04713	MC14069UBCL
A16U9	1826-0092	3		IC OP AMP GP DUAL TO-99 PKG	28480	1826-0092
A16U10	1810-0208	0	1	NETWORK-RES 8-SIP68.0K OHM X 7	01121	208A683
A16VR1	1902-0025	4	2	DIODE-ZNR 10V 5% DO-35 PD=.4W TC=+.06%	28480	1902-0025
A16VR2	1902-0041	4	2	DIODE-ZNR 5.11V 5% DO-35 PD=.4W	28480	1902-0041
A16VR3	1902-0025	4		DIODE-ZNR 10V 5% DO-35 PD=.4W TC=+.06%	28480	1902-0025
A16VR4	1902-3171	7	8	DIODE-ZNR 11V 5% DO-35 PD=.4W TC=+.062%	28480	1902-3171
A16VR5	1902-3171	7		DIODE-ZNR 11V 5% DO-35 PD=.4W TC=+.062%	28480	1902-3171
A16VR6	1902-3171	7		DIODE-ZNR 11V 5% DO-35 PD=.4W TC=+.062%	28480	1902-3171
A16VR7	1902-3171	7		DIODE-ZNR 11V 5% DO-35 PD=.4W TC=+.062%	28480	1902-3171
A16VR8	1902-3171	7		DIODE-ZNR 11V 5% DO-35 PD=.4W TC=+.062%	28480	1902-3171
A16VR9	1902-3171	7		DIODE-ZNR 11V 5% DO-35 PD=.4W TC=+.062%	28480	1902-3171
A16VR10	1902-3171	7		DIODE-ZNR 11V 5% DO-35 PD=.4W TC=+.062%	28480	1902-3171
A16VR11	1902-0041	4		DIODE-ZNR 5.11V 5% DO-35 PD=.4W	28480	1902-0041
A16VR12	1902-3171	7		DIODE-ZNR 11V 5% DO-35 PD=.4W TC=+.062%	28480	1902-3171

See introduction to this section for ordering information
*Indicates factory selected value

Table 6-3. Replaceable Parts

Reference Designation	HP Part Number	C D	Qty	Description	Mfr Code	Mfr Part Number
A17	08569-60066	2	1	FREQUENCY CONTROL ASSEMBLY	28480	08569-60066
A17C1	0180-0229	7	1	CAPACITOR-FXD 33UF+-10% 10VDC TA	56289	150D336X9010B2
A17C2	0160-3877	5	6	CAPACITOR-FXD 100PF +-20% 200VDC CER	28480	0160-3877
A17C3	0160-3877	5		CAPACITOR-FXD 100PF +-20% 200VDC CER	28480	0160-3877
A17C4	0160-3877	5		CAPACITOR-FXD 100PF +-20% 200VDC CER	28480	0160-3877
A17C5	0180-0116	1	1	CAPACITOR-FXD 6.8UF+-10% 35VDC TA	56289	150D685X9035B2
A17C6	0160-3877	5		CAPACITOR-FXD 100PF +-20% 200VDC CER	28480	0160-3877
A17C7	0160-3877	5		CAPACITOR-FXD 100PF +-20% 200VDC CER	28480	0160-3877
A17C8	0160-3877	5		CAPACITOR-FXD 100PF +-20% 200VDC CER	28480	0160-3877
A17C9	0180-1731	8	4	CAPACITOR-FXD 4.7UF+-10% 50VDC TA	56289	150D475X9050B2
A17C10	0180-1731	8		CAPACITOR-FXD 4.7UF+-10% 50VDC TA	56289	150D475X9050B2
A17C11	0180-1746	5	2	CAPACITOR-FXD 15UF+-10% 20VDC TA	56289	150D156X9020B2
A17C12	0180-0197	8	2	CAPACITOR-FXD 2.2UF+-10% 20VDC TA	56289	150D225X9020A2
A17C13	0180-1746	5		CAPACITOR-FXD 15UF+-10% 20VDC TA	56289	150D156X9020B2
A17C14	0180-0197	8		CAPACITOR-FXD 2.2UF+-10% 20VDC TA	56289	150D225X9020A2
A17C15	0180-1731	8		CAPACITOR-FXD 4.7UF+-10% 50VDC TA	56289	150D475X9050B2
A17C16	0180-1731	8		CAPACITOR-FXD 4.7UF+-10% 50VDC TA	56289	150D475X9050B2
A17CR1	1901-0050	3	31	DIODE-SWITCHING 80V 200MA 2NS DO-35	28480	1901-0050
A17CR2	1901-0050	3		DIODE-SWITCHING 80V 200MA 2NS DO-35	28480	1901-0050
A17CR3	1901-0050	3		DIODE-SWITCHING 80V 200MA 2NS DO-35	28480	1901-0050
A17CR4	1901-0050	3		DIODE-SWITCHING 80V 200MA 2NS DO-35	28480	1901-0050
A17CR5	1901-0050	3		DIODE-SWITCHING 80V 200MA 2NS DO-35	28480	1901-0050
A17CR6				NOT ASSIGNED		
A17CR7–A17CR32	1901-0050	3		DIODE-SWITCHING 80V 200MA 2NS DO-35	28480	1901-0050
A17L1	9140-0210	1	4	INDUCTOR RF-CH-MLD 100UH 5% .166DX.385LG	28480	9140-0210
A17L2	9140-0210	1		INDUCTOR RF-CH-MLD 100UH 5% .166DX.385LG	28480	9140-0210
A17L3	9140-0210	1		INDUCTOR RF-CH-MLD 100UH 5% .166DX.385LG	28480	9140-0210
A17L4	9140-0210	1		INDUCTOR RF-CH-MLD 100UH 5% .166DX.385LG	28480	9140-0210
A17MP1	1480-0073	6	2	PIN-ROLL .062-IN-DIA .25-IN-LG BE-CU	28480	1480-0073
A17MP2	4040-0748	3	1	EXTR-PC BD BLK POLYC .062-BD-THKNS	28480	4040-0748
A17MP3	4040-0754	1	1	EXTR-PC BD BLU POLYC .062-BD-THKNS	28480	4040-0754
A17Q1	1855-0020	8	19	TRANSISTOR J-FET N-CHAN D-MODE TO-18 SI	28480	1855-0020
A17Q2	1855-0020	8		TRANSISTOR J-FET N-CHAN D-MODE TO-18 SI	28480	1855-0020
A17Q3	1855-0082	2	3	TRANSISTOR J-FET P-CHAN D-MODE SI	28480	1855-0082
A17Q4	1855-0020	8		TRANSISTOR J-FET N-CHAN D-MODE TO-18 SI	28480	1855-0020
A17Q5	1855-0082	2		TRANSISTOR J-FET P-CHAN D-MODE SI	28480	1855-0082
A17Q6	1855-0020	8		TRANSISTOR J-FET N-CHAN D-MODE TO-18 SI	28480	1855-0020
A17Q7	1855-0082	2		TRANSISTOR J-FET P-CHAN D-MODE SI	28480	1855-0082
A17Q8	1855-0020	8		TRANSISTOR J-FET N-CHAN D-MODE TO-18 SI	28480	1855-0020
A17Q9	1854-0404	0	17	TRANSISTOR NPN SI TO-18 PD=360MW	28480	1854-0404
A17Q10	1855-0020	8		TRANSISTOR J-FET N-CHAN D-MODE TO-18 SI	28480	1855-0020
A17Q11	1854-0404	0		TRANSISTOR NPN SI TO-18 PD=360MW	28480	1854-0404
A17Q12	1855-0020	8		TRANSISTOR J-FET N-CHAN D-MODE TO-18 SI	28480	1855-0020
A17Q13	1854-0404	0		TRANSISTOR NPN SI TO-18 PD=360MW	28480	1854-0404
A17Q14	1855-0020	8		TRANSISTOR J-FET N-CHAN D-MODE TO-18 SI	28480	1855-0020
A17Q15	1854-0404	0		TRANSISTOR NPN SI TO-18 PD=360MW	28480	1854-0404
A17Q16	1855-0020	8		TRANSISTOR J-FET N-CHAN D-MODE TO-18 SI	28480	1855-0020
A17Q17	1854-0404	0		TRANSISTOR NPN SI TO-18 PD=360MW	28480	1854-0404
A17Q18	1855-0020	8		TRANSISTOR J-FET N-CHAN D-MODE TO-18 SI	28480	1855-0020
A17Q19	1854-0404	0		TRANSISTOR NPN SI TO-18 PD=360MW	28480	1854-0404
A17Q20	1855-0020	8		TRANSISTOR J-FET N-CHAN D-MODE TO-18 SI	28480	1855-0020
A17Q21	1854-0404	0		TRANSISTOR NPN SI TO-18 PD=360MW	28480	1854-0404
A17Q22	1854-0404	0		TRANSISTOR NPN SI TO-18 PD=360MW	28480	1854-0404
A17Q23	1855-0020	8		TRANSISTOR J-FET N-CHAN D-MODE TO-18 SI	28480	1855-0020
A17Q24	1854-0404	0		TRANSISTOR NPN SI TO-18 PD=360MW	28480	1854-0404
A17Q25	1855-0020	8		TRANSISTOR J-FET N-CHAN D-MODE TO-18 SI	28480	1855-0020
A17Q26	1854-0404	0		TRANSISTOR NPN SI TO-18 PD=360MW	28480	1854-0404
A17Q27	1855-0020	8		TRANSISTOR J-FET N-CHAN D-MODE TO-18 SI	28480	1855-0020
A17Q28	1854-0404	0		TRANSISTOR NPN SI TO-18 PD=360MW	28480	1854-0404
A17Q29	1855-0020	8		TRANSISTOR J-FET N-CHAN D-MODE TO-18 SI	28480	1855-0020
A17Q30	1854-0404	0		TRANSISTOR NPN SI TO-18 PD=360MW	28480	1854-0404
A17Q31	1855-0020	8		TRANSISTOR J-FET N-CHAN D-MODE TO-18 SI	28480	1855-0020
A17Q32	1854-0404	0		TRANSISTOR NPN SI TO-18 PD=360MW	28480	1854-0404
A17Q33	1855-0020	8		TRANSISTOR J-FET N-CHAN D-MODE TO-18 SI	28480	1855-0020
A17Q34	1854-0404	0		TRANSISTOR NPN SI TO-18 PD=360MW	28480	1854-0404
A17Q35	1855-0020	8		TRANSISTOR J-FET N-CHAN D-MODE TO-18 SI	28480	1855-0020
A17Q36	1854-0404	0		TRANSISTOR NPN SI TO-18 PD=360MW	28480	1854-0404
A17Q37	1853-0007	7	1	TRANSISTOR PNP 2N3251 SI TO-18 PD=360MW	04713	2N3251
A17Q38	1854-0404	0		TRANSISTOR NPN SI TO-18 PD=360MW	28480	1854-0404
A17Q39	1854-0404	0		TRANSISTOR NPN SI TO-18 PD=360MW	28480	1854-0404
A17Q40	1855-0020	8		TRANSISTOR J-FET N-CHAN D-MODE TO-18 SI	28480	1855-0020

See introduction to this section for ordering information
*Indicates factory selected value

Table 6-3. Replaceable Parts

Reference Designation	HP Part Number	C D	Qty	Description	Mfr Code	Mfr Part Number
A17R1	0698-8832	1	1	RESISTOR 12.3K .1% .125W F TC=0+-10	28480	0698-8832
A17R2	0698-8833	2	1	RESISTOR 10K .1% .125W F TC=0+-10	28480	0698-8833
A17R3	0698-3453	2	1	RESISTOR 196K 1% .125W F TC=0+-100	24546	C4-1/8-T0-1963-F
A17R4	0698-3260	9	1	RESISTOR 464K 1% .125W F TC=0+-100	28480	0698-3260
A17R5	0698-8807	0	1	RESISTOR 39K .1% .125W F TC=0+-25	28480	0698-8807
A17R6	0698-0085	0	2	RESISTOR 2.61K 1% .125W F TC=0+-100	24546	C4-1/8-T0-2611-F
A17R7	0757-0416	7	1	RESISTOR 511 1% .125W F TC=0+-100	24546	C4-1/8-T0-511R-F
A17R8	0757-0280	3	1	RESISTOR 1K 1% .125W F TC=0+-100	24546	C4-1/8-T0-1001-F
A17R9*	0698-3158	4	1	RESISTOR 23.7K 1% .125W F TC=0+-100	24546	C4-1/8-T0-2372-F
A17R10	0698-8838	7	1	RESISTOR 3.52K .1% .125W F TC=0+-10	28480	0698-8838
A17R11	2100-1972	3	6	RESISTOR-TRMR 20K 10% WW SIDE-ADJ 20-TRN	02660	3810P-203
A17R12	0757-0394	0	2	RESISTOR 51.1 1% .125W F TC=0+-100	24546	C4-1/8-T0-51R1-F
A17R13	0698-8835	4	1	RESISTOR 5K .1% .125W F TC=0+-10	28480	0698-8835
A17R14	0698-8885	4	19	RESISTOR 20K .01% .125W F TC=0+-10	28480	0698-8885
A17R15	0698-8885	4		RESISTOR 20K .01% .125W F TC=0+-10	28480	0698-8885
A17R16	0698-0085	0		RESISTOR 2.61K 1% .125W F TC=0+-100	24546	C4-1/8-T0-2611-F
A17R17	0698-8885	4		RESISTOR 20K .01% .125W F TC=0+-10	28480	0698-8885
A17R18	0698-6248	9	2	RESISTOR 400K 1% .125W F TC=0+-100	28480	0698-6248
A17R19	0698-8885	4		RESISTOR 20K .01% .125W F TC=0+-10	28480	0698-8885
A17R20	0757-0317	7	1	RESISTOR 1.33K 1% .125W F TC=0+-100	24546	C4-1/8-T0-1331-F
A17R21	0698-8885	4		RESISTOR 20K .01% .125W F TC=0+-10	28480	0698-8885
A17R22	0698-6630	3	2	RESISTOR 20K .1% .125W F TC=0+-25	28480	0698-6630
A17R23	0698-8885	4		RESISTOR 20K .01% .125W F TC=0+-10	28480	0698-8885
A17R24	0757-0465	6	18	RESISTOR 100K 1% .125W F TC=0+-100	24546	C4-1/8-T0-1003-F
A17R25	0757-0199	3	28	RESISTOR 21.5K 1% .125W F TC=0+-100	24546	C4-1/8-T0-2152-F
A17R26	0757-0458	7	2	RESISTOR 51.1K 1% .125W F TC=0+-100	24546	C4-1/8-T0-5112-F
A17R27	0757-0458	7		RESISTOR 51.1K 1% .125W F TC=0+-100	24546	C4-1/8-T0-5112-F
A17R28	0757-0465	6		RESISTOR 100K 1% .125W F TC=0+-100	24546	C4-1/8-T0-1003-F
A17R29	0757-0440	7	2	RESISTOR 7.5K 1% .125W F TC=0+-100	24546	C4-1/8-T0-7501-F
A17R30	0698-3156	2	3	RESISTOR 14.7K 1% .125W F TC=0+-100	24546	C4-1/8-T0-1472-F
A17R31	0757-0465	6		RESISTOR 100K 1% .125W F TC=0+-100	24546	C4-1/8-T0-1003-F
A17R32	0757-0440	7		RESISTOR 7.5K 1% .125W F TC=0+-100	24546	C4-1/8-T0-7501-F
A17R33	0698-3156	2		RESISTOR 14.7K 1% .125W F TC=0+-100	24546	C4-1/8-T0-1472-F
A17R34	0698-8885	4		RESISTOR 20K .01% .125W F TC=0+-10	28480	0698-8885
A17R35	0698-8845	6	2	RESISTOR 124.46K .1% .125W F TC=0+-25	28480	0698-8845
A17R36	0698-8886	5	3	RESISTOR 4K .01% .125W F TC=0+-10	28480	0698-8886
A17R37	0757-0465	6		RESISTOR 100K 1% .125W F TC=0+-100	24546	C4-1/8-T0-1003-F
A17R38	0757-0199	3		RESISTOR 21.5K 1% .125W F TC=0+-100	24546	C4-1/8-T0-2152-F
A17R39	0757-0199	3		RESISTOR 21.5K 1% .125W F TC=0+-100	24546	C4-1/8-T0-2152-F
A17R40	0698-8885	4		RESISTOR 20K .01% .125W F TC=0+-10	28480	0698-8885
A17R41	0698-8844	5	2	RESISTOR 248.9K .1% .125W F TC=0+-25	28480	0698-8844
A17R42	0683-6855	3	4	RESISTOR 6.8M 5% .25W FC TC=-900/+1100	01121	CB6855
A17R43	2100-1972	3		RESISTOR-TRMR 20K 10% WW SIDE-ADJ 20-TRN	02660	3810P-203
A17R44	0698-8887	6	2	RESISTOR 8K .01% .125W F TC=0+-10	28480	0698-8887
A17R45	0757-0465	6		RESISTOR 100K 1% .125W F TC=0+-100	24546	C4-1/8-T0-1003-F
A17R46	0757-0199	3		RESISTOR 21.5K 1% .125W F TC=0+-100	24546	C4-1/8-T0-2152-F
A17R47	0698-8885	4		RESISTOR 20K .01% .125W F TC=0+-10	28480	0698-8885
A17R48	0698-8843	4	2	RESISTOR 373.4K .1% .125W F TC=0+-25	28480	0698-8843
A17R49	0683-6855	3		RESISTOR 6.8M 5% .25W FC TC=-900/+1100	01121	CB6855
A17R50	2100-1972	3		RESISTOR-TRMR 20K 10% WW SIDE-ADJ 20-TRN	02660	3810P-203
A17R51	0698-8888	7	2	RESISTOR 12K .01% .125W F TC=0+-10	28480	0698-8888
A17R52	0757-0465	6		RESISTOR 100K 1% .125W F TC=0+-100	24546	C4-1/8-T0-1003-F
A17R53	0757-0199	3		RESISTOR 21.5K 1% .125W F TC=0+-100	24546	C4-1/8-T0-2152-F
A17R54	0698-8885	4		RESISTOR 20K .01% .125W F TC=0+-10	28480	0698-8885
A17R55	0698-8842	3	2	RESISTOR 497.8K .1% .125W F TC=0+-25	28480	0698-8842
A17R56	0683-6855	3		RESISTOR 6.8M 5% .25W FC TC=-900/+1100	01121	CB6855
A17R57	2100-1972	3		RESISTOR-TRMR 20K 10% WW SIDE-ADJ 20-TRN	02660	3810P-203
A17R58	0698-8889	8	2	RESISTOR 16K .01% .125W F TC=0+-10	28480	0698-8889
A17R59	0757-0465	6		RESISTOR 100K 1% .125W F TC=0+-100	24546	C4-1/8-T0-1003-F
A17R60	0757-0199	3		RESISTOR 21.5K 1% .125W F TC=0+-100	24546	C4-1/8-T0-2152-F
A17R61	0698-8885	4		RESISTOR 20K .01% .125W F TC=0+-10	28480	0698-8885
A17R62	0698-8841	2	2	RESISTOR 622.3K .1% .125W F TC=0+-25	28480	0698-8841
A17R63	0683-6855	3		RESISTOR 6.8M 5% .25W FC TC=-900/+1100	01121	CB6855
A17R64	2100-1972	3		RESISTOR-TRMR 20K 10% WW SIDE-ADJ 20-TRN	02660	3810P-203
A17R65	0698-8885	4		RESISTOR 20K .01% .125W F TC=0+-10	28480	0698-8885
A17R66	0757-0465	6		RESISTOR 100K 1% .125W F TC=0+-100	24546	C4-1/8-T0-1003-F
A17R67	0757-0199	3		RESISTOR 21.5K 1% .125W F TC=0+-100	24546	C4-1/8-T0-2152-F
A17R68	0698-6248	9		RESISTOR 400K 1% .125W F TC=0+-100	28480	0698-6248
A17R69	0757-0200	7	2	RESISTOR 5.62K 1% .125W F TC=0+-100	24546	C4-1/8-T0-5621-F
A17R70	0698-8885	4		RESISTOR 20K .01% .125W F TC=0+-10	28480	0698-8885
A17R71	0698-8890	1	1	RESISTOR 19.512K .01% .125W F TC=0+-10	28480	0698-8890
A17R72	0698-8886	5		RESISTOR 4K .01% .125W F TC=0+-10	28480	0698-8886
A17R73	0757-0465	6		RESISTOR 100K 1% .125W F TC=0+-100	24546	C4-1/8-T0-1003-F
A17R74	0757-0199	3		RESISTOR 21.5K 1% .125W F TC=0+-100	24546	C4-1/8-T0-2152-F
A17R75	0757-0199	3		RESISTOR 21.5K 1% .125W F TC=0+-100	24546	C4-1/8-T0-2152-F

See introduction to this section for ordering information
*Indicates factory selected value

Table 6-3. Replaceable Parts

Reference Designation	HP Part Number	C D	Qty	Description	Mfr Code	Mfr Part Number
A17R76	0698-8885	4		RESISTOR 20K .01% .125W F TC=0+-10	28480	0698-8885
A17R77	0698-8845	6		RESISTOR 124.46K .1% .125W F TC=0+-25	28480	0698-8845
A17R78	0698-8886	5		RESISTOR 4K .01% .125W F TC=0+-10	28480	0698-8886
A17R79	0757-0465	6		RESISTOR 100K 1% .125W F TC=0+-100	24546	C4-1/8-T0-1003-F
A17R80	0757-0199	3		RESISTOR 21.5K 1% .125W F TC=0+-100	24546	C4-1/8-T0-2152-F
A17R81	0757-0199	3		RESISTOR 21.5K 1% .125W F TC=0+-100	24546	C4-1/8-T0-2152-F
A17R82	0698-8885	4		RESISTOR 20K .01% .125W F TC=0+-10	28480	0698-8885
A17R83	0698-8844	5		RESISTOR 248.9K .1% .125W F TC=0+-25	28480	0698-8844
A17R84	0698-8887	6		RESISTOR 8K .01% .125W F TC=0+-10	28480	0698-8887
A17R85	0757-0465	6		RESISTOR 100K 1% .125W F TC=0+-100	24546	C4-1/8-T0-1003-F
A17R86	0757-0199	3		RESISTOR 21.5K 1% .125W F TC=0+-100	24546	C4-1/8-T0-2152-F
A17R87	0757-0199	3		RESISTOR 21.5K 1% .125W F TC=0+-100	24546	C4-1/8-T0-2152-F
A17R88	0698-8885	4		RESISTOR 20K .01% .125W F TC=0+-10	28480	0698-8885
A17R89	0698-8843	4		RESISTOR 373.4K .1% .125W F TC=0+-25	28480	0698-8843
A17R90	0698-8888	7		RESISTOR 12K .01% .125W F TC=0+-10	28480	0698-8888
A17R91	0757-0465	6		RESISTOR 100K 1% .125W F TC=0+-100	24546	C4-1/8-T0-1003-F
A17R92	0757-0199	3		RESISTOR 21.5K 1% .125W F TC=0+-100	24546	C4-1/8-T0-2152-F
A17R93	0757-0199	3		RESISTOR 21.5K 1% .125W F TC=0+-100	24546	C4-1/8-T0-2152-F
A17R94	0698-8885	4		RESISTOR 20K .01% .125W F TC=0+-10	28480	0698-8885
A17R95	0698-8842	3		RESISTOR 497.8K .1% .125W F TC=0+-25	28480	0698-8842
A17R96	0698-8889	8		RESISTOR 16K .01% .125W F TC=0+-10	28480	0698-8889
A17R97	0757-0465	6		RESISTOR 100K 1% .125W F TC=0+-100	24546	C4-1/8-T0-1003-F
A17R98	0757-0199	3		RESISTOR 21.5K 1% .125W F TC=0+-100	24546	C4-1/8-T0-2152-F
A17R99	0757-0199	3		RESISTOR 21.5K 1% .125W F TC=0+-100	24546	C4-1/8-T0-2152-F
A17R100	0698-8885	4		RESISTOR 20K .01% .125W F TC=0+-10	28480	0698-8885
A17R101	0698-8841	2		RESISTOR 622.3K .1% .125W F TC=0+-25	28480	0698-8841
A17R102	0698-8885	4		RESISTOR 20K .01% .125W F TC=0+-10	28480	0698-8885
A17R103	0757-0465	6		RESISTOR 100K 1% .125W F TC=0+-100	24546	C4-1/8-T0-1003-F
A17R104	0757-0199	3		RESISTOR 21.5K 1% .125W F TC=0+-100	24546	C4-1/8-T0-2152-F
A17R105	0757-0199	3		RESISTOR 21.5K 1% .125W F TC=0+-100	24546	C4-1/8-T0-2152-F
A17R106	0699-1025	2	1	RESISTOR-83.33K OHM .01% .12W	28480	0699-1025
A17R107	0699-1027	4	3	RESISTOR-3.11M OHM .25% .12W	28480	0699-1027
A17R108	0699-1024	1	3	RESISTOR-10K OHM .01% .12W	28480	0699-1024
A17R109	0757-0465	6		RESISTOR 100K 1% .125W F TC=0+-100	24546	C4-1/8-T0-1003-F
A17R110	0757-0199	3		RESISTOR 21.5K 1% .125W F TC=0+-100	24546	C4-1/8-T0-2152-F
A17R111	0757-0199	3		RESISTOR 21.5K 1% .125W F TC=0+-100	24546	C4-1/8-T0-2152-F
A17R112	0699-1026	3	1	RESISTOR-50K OHM .01% .12W	28480	0699-1026
A17R113	0699-1027	4		RESISTOR-3.11M OHM .25% .12W	28480	0699-1027
A17R114	0699-1024	1		RESISTOR-10K OHM .01% .12W	28480	0699-1024
A17R115	0757-0465	6		RESISTOR 100K 1% .125W F TC=0+-100	24546	C4-1/8-T0-1003-F
A17R116	0757-0199	3		RESISTOR 21.5K 1% .125W F TC=0+-100	24546	C4-1/8-T0-2152-F
A17R117	0757-0199	3		RESISTOR 21.5K 1% .125W F TC=0+-100	24546	C4-1/8-T0-2152-F
A17R118	0698-6630	3		RESISTOR 20K .1% .125W F TC=0+-25	28480	0698-6630
A17R119	0698-8877	4	1	RESISTOR 22.1K .1% .125W F TC=0+-25	28480	0698-8877
A17R120	0698-8806	9	1	RESISTOR 33.5K .1% .125W F TC=0+-25	28480	0698-8806
A17R121	0757-0465	6		RESISTOR 100K 1% .125W F TC=0+-100	24546	C4-1/8-T0-1003-F
A17R122	0757-0199	3		RESISTOR 21.5K 1% .125W F TC=0+-100	24546	C4-1/8-T0-2152-F
A17R123	0757-0199	3		RESISTOR 21.5K 1% .125W F TC=0+-100	24546	C4-1/8-T0-2152-F
A17R124	0757-0200	7		RESISTOR 5.62K 1% .125W F TC=0+-100	24546	C4-1/8-T0-5621-F
A17R125	2100-1972	3		RESISTOR-TRMR 20K 10% WW SIDE-ADJ 20-TRN	02660	3810P-203
A17R126	0698-3438	3	1	RESISTOR 147 1% .125W F TC=0+-100	24546	C4-1/8-T0-147R-F
A17R127	0757-0394	0		RESISTOR 51.1 1% .125W F TC=0+-100	24546	C4-1/8-T0-51R1-F
A17R128	0698-3156	2		RESISTOR 14.7K 1% .125W F TC=0+-100	24546	C4-1/8-T0-1472-F
A17R129	0699-1042	3	1	RESISTOR-19.23K OHM .01% .12W	28480	0699-1042
A17R130	0699-1027	4		RESISTOR-3.11M OHM .25% .12W	28480	0699-1027
A17R131	0699-1024	1		RESISTOR-10K OHM .01% .12W	28480	0699-1024
A17R132	0757-0465	6		RESISTOR 100K 1% .125W F TC=0+-100	24546	C4-1/8-T0-1003-F
A17R133	0757-0199	3		RESISTOR 21.5K 1% .125W F TC=0+-100	24546	C4-1/8-T0-2152-F
A17R134	0757-0199	3		RESISTOR 21.5K 1% .125W F TC=0+-100	24546	C4-1/8-T0-2152-F
A17R135	0757-0199	3		RESISTOR 21.5K 1% .125W F TC=0+-100	24546	C4-1/8-T0-2152-F
A17TP1	1251-0600	0	11	CONNECTOR-SGL CONT PIN 1.14-MM-BSC-SZ SQ	28480	1251-0600
A17TP2	1251-0600	0		CONNECTOR-SGL CONT PIN 1.14-MM-BSC-SZ SQ	28480	1251-0600
A17TP3	1251-0600	0		CONNECTOR-SGL CONT PIN 1.14-MM-BSC-SZ SQ	28480	1251-0600
A17TP4	1251-0600	0		CONNECTOR-SGL CONT PIN 1.14-MM-BSC-SZ SQ	28480	1251-0600
A17TP5	1251-0600	0		CONNECTOR-SGL CONT PIN 1.14-MM-BSC-SZ SQ	28480	1251-0600
A17TP6	0360-0077	5	1	TERMINAL-STUD SGL-TUR SWGFRM-MTG	28480	0360-0077
A17TP7	1251-0600	0		CONNECTOR-SGL CONT PIN 1.14-MM-BSC-SZ SQ	28480	1251-0600
A17TP8	1251-0600	0		CONNECTOR-SGL CONT PIN 1.14-MM-BSC-SZ SQ	28480	1251-0600
A17TP9	1251-0600	0		CONNECTOR-SGL CONT PIN 1.14-MM-BSC-SZ SQ	28480	1251-0600
A17TP10	1251-0600	0		CONNECTOR-SGL CONT PIN 1.14-MM-BSC-SZ SQ	28480	1251-0600
A17TP11	1251-0600	0		CONNECTOR-SGL CONT PIN 1.14-MM-BSC-SZ SQ	28480	1251-0600
A17TP12	1251-0600	0		CONNECTOR-SGL CONT PIN 1.14-MM-BSC-SZ SQ	28480	1251-0600
A17U1	1826-0261	8	8	IC OP AMP LOW-NOISE TO-99 PKG	28480	1826-0261
A17U2	1826-0261	8		IC OP AMP LOW-NOISE TO-99 PKG	28480	1826-0261
A17U3	1826-0261	8		IC OP AMP LOW-NOISE TO-99 PKG	28480	1826-0261
A17U4	1826-0261	8		IC OP AMP LOW-NOISE TO-99 PKG	28480	1826-0261
A17U5	1826-0261	8		IC OP AMP LOW-NOISE TO-99 PKG	28480	1826-0261

See introduction to this section for ordering information
*Indicates factory selected value

Table 6-3. Replaceable Parts

Reference Designation	HP Part Number	C D	Qty	Description	Mfr Code	Mfr Part Number
A17U6	1826-0261	8		IC OP AMP LOW-NOISE TO-99 PKG	28480	1826-0261
A17U7	1826-0261	8		IC OP AMP LOW-NOISE TO-99 PKG	28480	1826-0261
A17U8	1826-0618	9	1	IC OP AMP LOW-NOISE TO-99 PKG	28480	1826-0618
A17U9	1826-0261	8		IC OP AMP LOW-NOISE TO-99 PKG	28480	1826-0261
A17VR1	1902-0680	7	1	DIODE-ZNR 1N827 6.2V 5% DO-7 PD=.4W	24046	1N827
A17VR2	1902-3002	3	1	DIODE-ZNR 2.37V 5% DO-7 PD=.4W TC=-.074%	28480	1902-3002
A17VR3	1902-3182	0	2	DIODE-ZNR 12.1V 5% DO-35 PD=.4W	28480	1902-3182
A17VR4	1902-3171	7	1	DIODE-ZNR 11V 5% DO-35 PD=.4W TC=+.062%	28480	1902-3171
A17VR5	1902-3182	0		DIODE-ZNR 12.1V 5% DO-35 PD=.4W	28480	1902-3182
A17VR6	1902-0041	4	1	DIODE-ZNR 5.11V 5% DO-35 PD=.4W	28480	1902-0041

See introduction to this section for ordering information
*Indicates factory selected value

Table 6-3. Replaceable Parts

Reference Designation	HP Part Number	C D	Qty	Description	Mfr Code	Mfr Part Number
A18	08569-60070	8	1	FULL MULTIBAND ASSEMBLY	28480	08569-60070
A18C1	0160-0302	5	4	CAPACITOR-FXD .018UF +-10% 200VDC POLYE	28480	0160-0302
A18C2	0160-0302	5		CAPACITOR-FXD .018UF +-10% 200VDC POLYE	28480	0160-0302
A18C3	0160-0302	5		CAPACITOR-FXD .018UF +-10% 200VDC POLYE	28480	0160-0302
A18C4	0160-0302	5		CAPACITOR-FXD .018UF +-10% 200VDC POLYE	28480	0160-0302
A18C5	0180-1731	8	2	CAPACITOR-FXD 4.7UF+-10% 50VDC TA	56289	150D475X9050B2
A18C6	0180-1746	5	2	CAPACITOR-FXD 15UF+-10% 20VDC TA	56289	150D156X9020B2
A18C7	0180-1746	5		CAPACITOR-FXD 15UF+-10% 20VDC TA	56289	150D156X9020B2
A18C8	0180-1731	8		CAPACITOR-FXD 4.7UF+-10% 50VDC TA	56289	150D475X9050B2
A18CR1	1901-0050	3	42	DIODE-SWITCHING 80V 200MA 2NS DO-35	28480	1901-0050
A18CR2	1901-0050	3		DIODE-SWITCHING 80V 200MA 2NS DO-35	28480	1901-0050
A18CR3	1901-0050	3		DIODE-SWITCHING 80V 200MA 2NS DO-35	28480	1901-0050
A18CR4	1901-0050	3		DIODE-SWITCHING 80V 200MA 2NS DO-35	28480	1901-0050
A18CR5	1901-0050	3		DIODE-SWITCHING 80V 200MA 2NS DO-35	28480	1901-0050
A18CR6	1901-0050	3		DIODE-SWITCHING 80V 200MA 2NS DO-35	28480	1901-0050
A18CR7	1901-0050	3		DIODE-SWITCHING 80V 200MA 2NS DO-35	28480	1901-0050
A18CR8	1901-0050	3		DIODE-SWITCHING 80V 200MA 2NS DO-35	28480	1901-0050
A18CR9	1901-0050	3		DIODE-SWITCHING 80V 200MA 2NS DO-35	28480	1901-0050
A18CR10	1901-0050	3		DIODE-SWITCHING 80V 200MA 2NS DO-35	28480	1901-0050
A18CR11	1901-0050	3		DIODE-SWITCHING 80V 200MA 2NS DO-35	28480	1901-0050
A18CR12	1901-0050	3		DIODE-SWITCHING 80V 200MA 2NS DO-35	28480	1901-0050
A18CR13	1901-0050	3		DIODE-SWITCHING 80V 200MA 2NS DO-35	28480	1901-0050
A18CR14	1901-0050	3		DIODE-SWITCHING 80V 200MA 2NS DO-35	28480	1901-0050
A18CR15	1901-0050	3		DIODE-SWITCHING 80V 200MA 2NS DO-35	28480	1901-0050
A18CR16	1901-0050	3		DIODE-SWITCHING 80V 200MA 2NS DO-35	28480	1901-0050
A18CR17	1901-0050	3		DIODE-SWITCHING 80V 200MA 2NS DO-35	28480	1901-0050
A18CR18	1901-0050	3		DIODE-SWITCHING 80V 200MA 2NS DO-35	28480	1901-0050
A18CR19	1901-0050	3		DIODE-SWITCHING 80V 200MA 2NS DO-35	28480	1901-0050
A18CR20	1901-0050	3		DIODE-SWITCHING 80V 200MA 2NS DO-35	28480	1901-0050
A18CR21	1901-0050	3		DIODE-SWITCHING 80V 200MA 2NS DO-35	28480	1901-0050
A18CR22	1901-0050	3		DIODE-SWITCHING 80V 200MA 2NS DO-35	28480	1901-0050
A18CR23	1901-0050	3		DIODE-SWITCHING 80V 200MA 2NS DO-35	28480	1901-0050
A18CR24	1901-0050	3		DIODE-SWITCHING 80V 200MA 2NS DO-35	28480	1901-0050
A18CR25	1901-0050	3		DIODE-SWITCHING 80V 200MA 2NS DO-35	28480	1901-0050
A18CR26	1901-0050	3		DIODE-SWITCHING 80V 200MA 2NS DO-35	28480	1901-0050
A18CR27	1901-0050	3		DIODE-SWITCHING 80V 200MA 2NS DO-35	28480	1901-0050
A18CR28	1901-0050	3		DIODE-SWITCHING 80V 200MA 2NS DO-35	28480	1901-0050
A18CR29	1901-0050	3		DIODE-SWITCHING 80V 200MA 2NS DO-35	28480	1901-0050
A18CR30	1901-0050	3		DIODE-SWITCHING 80V 200MA 2NS DO-35	28480	1901-0050
A18CR31				NOT ASSIGNED		
A18CR32	1901-0050	3		DIODE-SWITCHING 80V 200MA 2NS DO-35	28480	1901-0050
A18CR33	1901-0050	3		DIODE-SWITCHING 80V 200MA 2NS DO-35	28480	1901-0050
A18CR34	1901-0050	3		DIODE-SWITCHING 80V 200MA 2NS DO-35	28480	1901-0050
A18CR35	1901-0050	3		DIODE-SWITCHING 80V 200MA 2NS DO-35	28480	1901-0050
A18CR36	1901-0050	3		DIODE-SWITCHING 80V 200MA 2NS DO-35	28480	1901-0050
A18CR37	1901-0050	3		DIODE-SWITCHING 80V 200MA 2NS DO-35	28480	1901-0050
A18CR38	1901-0050	3		DIODE-SWITCHING 80V 200MA 2NS DO-35	28480	1901-0050
A18CR39	1901-0050	3		DIODE-SWITCHING 80V 200MA 2NS DO-35	28480	1901-0050
A18CR40	1901-0050	3		DIODE-SWITCHING 80V 200MA 2NS DO-35	28480	1901-0050
A18CR41	1901-0050	3		DIODE-SWITCHING 80V 200MA 2NS DO-35	28480	1901-0050
A18CR42	1901-0050	3		DIODE-SWITCHING 80V 200MA 2NS DO-35	28480	1901-0050
A18CR43	1901-0050	3		DIODE-SWITCHING 80V 200MA 2NS DO-35	28480	1901-0050
A18L1	9140-0210	1	4	INDUCTOR RF-CH-MLD 100UH 5% .166DX.385LG	28480	9140-0210
A18L2	9140-0210	1		INDUCTOR RF-CH-MLD 100UH 5% .166DX.385LG	28480	9140-0210
A18L3	9140-0210	1		INDUCTOR RF-CH-MLD 100UH 5% .166DX.385LG	28480	9140-0210
A18L4	9140-0210	1		INDUCTOR RF-CH-MLD 100UH 5% .166DX.385LG	28480	9140-0210
A18MP1	1480-0073	6	2	PIN-ROLL .062-IN-DIA .25-IN-LG BE-CU	28480	1480-0073
A18MP2	4040-0748	3	1	EXTR-PC BD BLK POLYC .062-BD-THKNS	28480	4040-0748
A18MP3				NOT ASSIGNED		
A18MP4	4040-0755	2	1	EXTR-PC BD VIO POLYC .062-BD-THKNS	28480	4040-0755
A18Q1	1853-0007	7	10	TRANSISTOR PNP 2N3251 SI TO-18 PD=360MW	04713	2N3251
A18Q2	1854-0404	0	20	TRANSISTOR NPN SI TO-18 PD=360MW	28480	1854-0404
A18Q3	1853-0007	7		TRANSISTOR PNP 2N3251 SI TO-18 PD=360MW	04713	2N3251
A18Q4	1853-0007	7		TRANSISTOR PNP 2N3251 SI TO-18 PD=360MW	04713	2N3251
A18Q5	1853-0007	7		TRANSISTOR PNP 2N3251 SI TO-18 PD=360MW	04713	2N3251
A18Q6	1853-0007	7		TRANSISTOR PNP 2N3251 SI TO-18 PD=360MW	04713	2N3251
A18Q7	1855-0020	8	8	TRANSISTOR J-FET N-CHAN D-MODE TO-18 SI	28480	1855-0020
A18Q8	1854-0404	0		TRANSISTOR NPN SI TO-18 PD=360MW	28480	1854-0404
A18Q9	1855-0020	8		TRANSISTOR J-FET N-CHAN D-MODE TO-18 SI	28480	1855-0020
A18Q10	1854-0404	0		TRANSISTOR NPN SI TO-18 PD=360MW	28480	1854-0404

See introduction to this section for ordering information
*Indicates factory selected value

Table 6-3. Replaceable Parts

Reference Designation	HP Part Number	C D	Qty	Description	Mfr Code	Mfr Part Number
A18Q11	1855-0020	8		TRANSISTOR J-FET N-CHAN D-MODE TO-18 SI	28480	1855-0020
A18Q12	1854-0404	0		TRANSISTOR NPN SI TO-18 PD=360MW	28480	1854-0404
A18Q13	1855-0020	8		TRANSISTOR J-FET N-CHAN D-MODE TO-18 SI	28480	1855-0020
A18Q14	1854-0404	0		TRANSISTOR NPN SI TO-18 PD=360MW	28480	1854-0404
A18Q15	1855-0020	8		TRANSISTOR J-FET N-CHAN D-MODE TO-18 SI	28480	1855-0020
A18Q16	1854-0404	0		TRANSISTOR NPN SI TO-18 PD=360MW	28480	1854-0404
A18Q17	1854-0404	0		TRANSISTOR NPN SI TO-18 PD=360MW	28480	1854-0404
A18Q18	1854-0404	0		TRANSISTOR NPN SI TO-18 PD=360MW	28480	1854-0404
A18Q19	1854-0404	0		TRANSISTOR NPN SI TO-18 PD=360MW	28480	1854-0404
A18Q20	1854-0404	0		TRANSISTOR NPN SI TO-18 PD=360MW	28480	1854-0404
A18Q21	1854-0404	0		TRANSISTOR NPN SI TO-18 PD=360MW	28480	1854-0404
A18Q22	1853-0007	7		TRANSISTOR PNP 2N3251 SI TO-18 PD=360MW	04713	2N3251
A18Q23	1853-0007	7		TRANSISTOR PNP 2N3251 SI TO-18 PD=360MW	04713	2N3251
A18Q24	1853-0007	7		TRANSISTOR PNP 2N3251 SI TO-18 PD=360MW	04713	2N3251
A18Q25	1853-0007	7		TRANSISTOR PNP 2N3251 SI TO-18 PD=360MW	04713	2N3251
A18Q26	1853-0007	7		TRANSISTOR PNP 2N3251 SI TO-18 PD=360MW	04713	2N3251
A18Q27	1854-0404	0		TRANSISTOR NPN SI TO-18 PD=360MW	28480	1854-0404
A18Q28	1854-0404	0		TRANSISTOR NPN SI TO-18 PD=360MW	28480	1854-0404
A18Q29	1854-0404	0		TRANSISTOR NPN SI TO-18 PD=360MW	28480	1854-0404
A18Q30	1854-0404	0		TRANSISTOR NPN SI TO-18 PD=360MW	28480	1854-0404
A18Q31	1854-0404	0		TRANSISTOR NPN SI TO-18 PD=360MW	28480	1854-0404
A18Q32	1854-0404	0		TRANSISTOR NPN SI TO-18 PD=360MW	28480	1854-0404
A18Q33	1854-0404	0		TRANSISTOR NPN SI TO-18 PD=360MW	28480	1854-0404
A18Q34	1855-0020	8		TRANSISTOR J-FET N-CHAN D-MODE TO-18 SI	28480	1855-0020
A18Q35	1855-0020	8		TRANSISTOR J-FET N-CHAN D-MODE TO-18 SI	28480	1855-0020
A18Q36	1854-0404	0		TRANSISTOR NPN SI TO-18 PD=360MW	28480	1854-0404
A18Q37	1854-0404	0		TRANSISTOR NPN SI TO-18 PD=360MW	28480	1854-0404
A18Q38	1855-0020	8		TRANSISTOR J-FET N-CHAN D-MODE TO-18 SI	28480	1855-0020
A18R1	0698-6630	3	19	RESISTOR 20K .1% .125W F TC=0+-25	28480	0698-6630
A18R2	0698-8851	4	1	RESISTOR 34.7K .1% .125W F TC=0+-25	28480	0698-8851
A18R3	0757-0199	3	32	RESISTOR 21.5K 1% .125W F TC=0+-100	24546	C4-1/8-T0-2152-F
A18R4	0698-8850	3	1	RESISTOR 41.9K .1% .125W F TC=0+-25	28480	0698-8850
A18R5	0698-6630	3		RESISTOR 20K .1% .125W F TC=0+-25	28480	0698-6630
A18R6	0698-6630	3		RESISTOR 20K .1% .125W F TC=0+-25	28480	0698-6630
A18R7	0698-8867	2	1	RESISTOR 4.06K .1% .125W F TC=0+-25	28480	0698-8867
A18R8	0698-8863	8	1	RESISTOR 5.2K .1% .125W F TC=0+-25	28480	0698-8863
A18R9	0698-8864	9	1	RESISTOR 4.49K .1% .125W F TC=0+-25	28480	0698-8864
A18R10	0698-8865	0	1	RESISTOR 4.45K .1% .125W F TC=0+-25	28480	0698-8865
A18R11	0698-8866	1	1	RESISTOR 4.1K .1% .125W F TC=0+-25	28480	0698-8866
A18R12	0757-0199	3		RESISTOR 21.5K 1% .125W F TC=0+-100	24546	C4-1/8-T0-2152-F
A18R13	0757-0439	4	5	RESISTOR 6.81K 1% .125W F TC=0+-100	24546	C4-1/8-T0-6811-F
A18R14	0757-0199	3		RESISTOR 21.5K 1% .125W F TC=0+-100	24546	C4-1/8-T0-2152-F
A18R15	0757-0199	3		RESISTOR 21.5K 1% .125W F TC=0+-100	24546	C4-1/8-T0-2152-F
A18R16	0757-0439	4		RESISTOR 6.81K 1% .125W F TC=0+-100	24546	C4-1/8-T0-6811-F
A18R17	0757-0199	3		RESISTOR 21.5K 1% .125W F TC=0+-100	24546	C4-1/8-T0-2152-F
A18R18	0757-0199	3		RESISTOR 21.5K 1% .125W F TC=0+-100	24546	C4-1/8-T0-2152-F
A18R19	0757-0439	4		RESISTOR 6.81K 1% .125W F TC=0+-100	24546	C4-1/8-T0-6811-F
A18R20	0757-0199	3		RESISTOR 21.5K 1% .125W F TC=0+-100	24546	C4-1/8-T0-2152-F
A18R21				NOT ASSIGNED		
A18R22	0757-0439	4		RESISTOR 6.81K 1% .125W F TC=0+-100	24546	C4-1/8-T0-6811-F
A18R23	0757-0199	3		RESISTOR 21.5K 1% .125W F TC=0+-100	24546	C4-1/8-T0-2152-F
A18R24	0757-0439	4		RESISTOR 6.81K 1% .125W F TC=0+-100	24546	C4-1/8-T0-6811-F
A18R25	0757-0199	3		RESISTOR 21.5K 1% .125W F TC=0+-100	24546	C4-1/8-T0-2152-F
A18R26	0757-0199	3		RESISTOR 21.5K 1% .125W F TC=0+-100	24546	C4-1/8-T0-2152-F
A18R27	0757-0199	3		RESISTOR 21.5K 1% .125W F TC=0+-100	24546	C4-1/8-T0-2152-F
A18R28	0698-6630	3		RESISTOR 20K .1% .125W F TC=0+-25	28480	0698-6630
A18R29	0698-6630	3		RESISTOR 20K .1% .125W F TC=0+-25	28480	0698-6630
A18R30	0757-0440	7	1	RESISTOR 7.5K 1% .125W F TC=0+-100	24546	C4-1/8-T0-7501-F
A18R31	0698-3260	9	4	RESISTOR 464K 1% .125W F TC=0+-100	28480	0698-3260
A18R32	0757-0458	7	4	RESISTOR 51.1K 1% .125W F TC=0+-100	24546	C4-1/8-T0-5112-F
A18R33	0698-3260	9		RESISTOR 464K 1% .125W F TC=0+-100	28480	0698-3260
A18R34	0757-0458	7		RESISTOR 51.1K 1% .125W F TC=0+-100	24546	C4-1/8-T0-5112-F
A18R35	0698-3260	9		RESISTOR 464K 1% .125W F TC=0+-100	28480	0698-3260
A18R36	0757-0458	7		RESISTOR 51.1K 1% .125W F TC=0+-100	24546	C4-1/8-T0-5112-F
A18R37	0698-3260	9		RESISTOR 464K 1% .125W F TC=0+-100	28480	0698-3260
A18R38	0757-0458	7		RESISTOR 51.1K 1% .125W F TC=0+-100	24546	C4-1/8-T0-5112-F
A18R39	0757-0199	3		RESISTOR 21.5K 1% .125W F TC=0+-100	24546	C4-1/8-T0-2152-F
A18R40	0698-0083	8	1	RESISTOR 1.96K 1% .125W F TC=0+-100	24546	C4-1/8-T0-1961-F
A18R41	0698-6630	3		RESISTOR 20K .1% .125W F TC=0+-25	28480	0698-6630
A18R42	0698-6630	3		RESISTOR 20K .1% .125W F TC=0+-25	28480	0698-6630
A18R43	0698-3456	5	3	RESISTOR 287K 1% .125W F TC=0+-100	24546	C4-1/8-T0-2873-F
A18R44	0757-0199	3		RESISTOR 21.5K 1% .125W F TC=0+-100	24546	C4-1/8-T0-2152-F
A18R45	0757-0465	6	8	RESISTOR 100K 1% .125W F TC=0+-100	24546	C4-1/8-T0-1003-F
A18R46	0698-8046	9	1	RESISTOR 16K .1% .125W F TC=0+-25	19701	MF4C1/8-T9-1602-B
A18R47	0698-6630	3		RESISTOR 20K .1% .125W F TC=0+-25	28480	0698-6630
A18R48	0698-3456	5		RESISTOR 287K 1% .125W F TC=0+-100	24546	C4-1/8-T0-2873-F
A18R49				NOT ASSIGNED		
A18R50	0757-0465	6		RESISTOR 100K 1% .125W F TC=0+-100	24546	C4-1/8-T0-1003-F

See introduction to this section for ordering information
*Indicates factory selected value

Table 6-3. Replaceable Parts

Reference Designation	HP Part Number	C D	Qty	Description	Mfr Code	Mfr Part Number
A18R51	0698-8859	2	1	RESISTOR 12K .1% .125W F TC=0+-25	28480	0698-8859
A18R52				NOT ASSIGNED		
A18R53	0757-0136	8	1	RESISTOR 619K 1% .5W F TC=0+-100	28480	0757-0136
A18R54	0757-0199	3		RESISTOR 21.5K 1% .125W F TC=0+-100	24546	C4-1/8-T0-2152-F
A18R55	0757-0465	6		RESISTOR 100K 1% .125W F TC=0+-100	24546	C4-1/8-T0-1003-F
A18R56	0698-6361	7	1	RESISTOR 8K .1% .125W F TC=0+-25	28480	0698-6361
A18R57	0698-6630	3		RESISTOR 20K .1% .125W F TC=0+-25	28480	0698-6630
A18R58	0698-3456	5		RESISTOR 287K 1% .125W F TC=0+-100	24546	C4-1/8-T0-2873-F
A18R59	0757-0199	3		RESISTOR 21.5K 1% .125W F TC=0+-100	24546	C4-1/8-T0-2152-F
A18R60	0757-0465	6		RESISTOR 100K 1% .125W F TC=0+-100	24546	C4-1/8-T0-1003-F
A18R61	0698-6322	0	1	RESISTOR 4K .1% .125W F TC=0+-25	28480	0698-6322
A18R62	0698-6630	3		RESISTOR 20K .1% .125W F TC=0+-25	28480	0698-6630
A18R63	0757-0467	8	2	RESISTOR 121K 1% .125W F TC=0+-100	24546	C4-1/8-T0-1213-F
A18R64	0757-0199	3		RESISTOR 21.5K 1% .125W F TC=0+-100	24546	C4-1/8-T0-2152-F
A18R65	0757-0465	6		RESISTOR 100K 1% .125W F TC=0+-100	24546	C4-1/8-T0-1003-F
A18R66	0757-0199	3		RESISTOR 21.5K 1% .125W F TC=0+-100	24546	C4-1/8-T0-2152-F
A18R67	0757-0199	3		RESISTOR 21.5K 1% .125W F TC=0+-100	24546	C4-1/8-T0-2152-F
A18R68	0757-0467	8		RESISTOR 121K 1% .125W F TC=0+-100	24546	C4-1/8-T0-1213-F
A18R69				NOT ASSIGNED		
A18R70	0757-0465	6		RESISTOR 100K 1% .125W F TC=0+-100	24546	C4-1/8-T0-1003-F
A18R71	0757-0199	3		RESISTOR 21.5K 1% .125W F TC=0+-100	24546	C4-1/8-T0-2152-F
A18R72	0757-0462	3	1	RESISTOR 75K 1% .125W F TC=0+-100	24546	C4-1/8-T0-7502-F
A18R73	0757-0199	3		RESISTOR 21.5K 1% .125W F TC=0+-100	24546	C4-1/8-T0-2152-F
A18R74	0757-0459	8	1	RESISTOR 56.2K 1% .125W F TC=0+-100	24546	C4-1/8-T0-5622-F
A18R75	0757-0199	3		RESISTOR 21.5K 1% .125W F TC=0+-100	24546	C4-1/8-T0-2152-F
A18R76	0698-3161	9	1	RESISTOR 38.3K 1% .125W F TC=0+-100	24546	C4-1/8-T0-3832-F
A18R77	0757-0199	3		RESISTOR 21.5K 1% .125W F TC=0+-100	24546	C4-1/8-T0-2152-F
A18R78	0757-0123	3	1	RESISTOR 34.8K 1% .125W F TC=0+-100	28480	0757-0123
A18R79	0698-8853	6	1	RESISTOR 21.98K .1% .125W F TC=0+-25	28480	0698-8853
A18R80	0698-6630	3		RESISTOR 20K .1% .125W F TC=0+-25	28480	0698-6630
A18R81	0698-8856	9	1	RESISTOR 13.56K .1% .125W F TC=0+-25	28480	0698-8856
A18R82	0757-0199	3		RESISTOR 21.5K 1% .125W F TC=0+-100	24546	C4-1/8-T0-2152-F
A18R83	0757-0465	6		RESISTOR 100K 1% .125W F TC=0+-100	24546	C4-1/8-T0-1003-F
A18R84	0698-8855	8	1	RESISTOR 16.46K .1% .125W F TC=0+-25	28480	0698-8855
A18R85	0698-6630	3		RESISTOR 20K .1% .125W F TC=0+-25	28480	0698-6630
A18R86	0698-8858	1	1	RESISTOR 12.4K .1% .125W F TC=0+-25	28480	0698-8858
A18R87				NOT ASSIGNED		
A18R88	0757-0199	3		RESISTOR 21.5K 1% .125W F TC=0+-100	24546	C4-1/8-T0-2152-F
A18R89				NOT ASSIGNED		
A18R90	0698-8854	7	1	RESISTOR 17.17K .1% .125W F TC=0+-25	28480	0698-8854
A18R91	0698-6630	3		RESISTOR 20K .1% .125W F TC=0+-25	28480	0698-6630
A18R92	0698-8857	0	1	RESISTOR 12.56K .1% .125W F TC=0+-25	28480	0698-8857
A18R93	0757-0199	3		RESISTOR 21.5K 1% .125W F TC=0+-100	24546	C4-1/8-T0-2152-F
A18R94	0757-0199	3		RESISTOR 21.5K 1% .125W F TC=0+-100	24546	C4-1/8-T0-2152-F
A18R95	0757-0465	6		RESISTOR 100K 1% .125W F TC=0+-100	24546	C4-1/8-T0-1003-F
A18R96	0698-6630	3		RESISTOR 20K .1% .125W F TC=0+-25	28480	0698-6630
A18R97	0698-6630	3		RESISTOR 20K .1% .125W F TC=0+-25	28480	0698-6630
A18R98	0698-6630	3		RESISTOR 20K .1% .125W F TC=0+-25	28480	0698-6630
A18R99	0698-6630	3		RESISTOR 20K .1% .125W F TC=0+-25	28480	0698-6630
A18R100	0757-0199	3		RESISTOR 21.5K 1% .125W F TC=0+-100	24546	C4-1/8-T0-2152-F
A18R101	0683-1055	5	2	RESISTOR 1M 5% .25W FC TC=-800/+900	01121	CB1055
A18R102	0757-0199	3		RESISTOR 21.5K 1% .125W F TC=0+-100	24546	C4-1/8-T0-2152-F
A18R103	0757-0199	3		RESISTOR 21.5K 1% .125W F TC=0+-100	24546	C4-1/8-T0-2152-F
A18R104	0757-0442	9	2	RESISTOR 10K 1% .125W F TC=0+-100	24546	C4-1/8-T0-1002-F
A18R105	0698-3450	9	2	RESISTOR 42.2K 1% .125W F TC=0+-100	24546	C4-1/8-T0-4222-F
A18R106	0698-6630	3		RESISTOR 20K .1% .125W F TC=0+-25	28480	0698-6630
A18R107	0698-6630	3		RESISTOR 20K .1% .125W F TC=0+-25	28480	0698-6630
A18R108	0757-0199	3		RESISTOR 21.5K 1% .125W F TC=0+-100	24546	C4-1/8-T0-2152-F
A18R109	0683-1055	5		RESISTOR 1M 5% .25W FC TC=-800/+900	01121	CB1055
A18R110	0757-0199	3		RESISTOR 21.5K 1% .125W F TC=0+-100	24546	C4-1/8-T0-2152-F
A18R111	0757-0199	3		RESISTOR 21.5K 1% .125W F TC=0+-100	24546	C4-1/8-T0-2152-F
A18R112	0757-0442	9		RESISTOR 10K 1% .125W F TC=0+-100	24546	C4-1/8-T0-1002-F
A18R113	0698-3450	9		RESISTOR 42.2K 1% .125W F TC=0+-100	24546	C4-1/8-T0-4222-F
A18TP1	1251-0600	0	10	CONNECTOR-SGL CONT PIN 1.14-MM-BSC-SZ SQ	28480	1251-0600
A18TP2	1251-0600	0		CONNECTOR-SGL CONT PIN 1.14-MM-BSC-SZ SQ	28480	1251-0600
A18TP3	1251-0600	0		CONNECTOR-SGL CONT PIN 1.14-MM-BSC-SZ SQ	28480	1251-0600
A18TP4	1251-0600	0		CONNECTOR-SGL CONT PIN 1.14-MM-BSC-SZ SQ	28480	1251-0600
A18TP5	0360-0077	5	1	TERMINAL-STUD SGL-TUR SWGFRM-MTG	28480	0360-0077
A18TP6	1251-0600	0		CONNECTOR-SGL CONT PIN 1.14-MM-BSC-SZ SQ	28480	1251-0600
A18TP7	1251-0600	0		CONNECTOR-SGL CONT PIN 1.14-MM-BSC-SZ SQ	28480	1251-0600
A18TP8	1251-0600	0		CONNECTOR-SGL CONT PIN 1.14-MM-BSC-SZ SQ	28480	1251-0600
A18TP9	1251-0600	0		CONNECTOR-SGL CONT PIN 1.14-MM-BSC-SZ SQ	28480	1251-0600
A18TP10	1251-0600	0		CONNECTOR-SGL CONT PIN 1.14-MM-BSC-SZ SQ	28480	1251-0600
A18TP11	1251-0600	0		CONNECTOR-SGL CONT PIN 1.14-MM-BSC-SZ SQ	28480	1251-0600

See introduction to this section for ordering information
*Indicates factory selected value

Table 6-3. Replaceable Parts

Reference Designation	HP Part Number	C D	Qty	Description	Mfr Code	Mfr Part Number
A18U1	1826-0092	3	8	IC OP AMP GP DUAL TO-99 PKG	28480	1826-0092
A18U2	1826-0092	3		IC OP AMP GP DUAL TO-99 PKG	28480	1826-0092
A18U3	1826-0092	3		IC OP AMP GP DUAL TO-99 PKG	28480	1826-0092
A18U4	1826-0092	3		IC OP AMP GP DUAL TO-99 PKG	28480	1826-0092
A18U5	1826-0092	3		IC OP AMP GP DUAL TO-99 PKG	28480	1826-0092
A18U6	1826-0092	3		IC OP AMP GP DUAL TO-99 PKG	28480	1826-0092
A18U7	1826-0092	3		IC OP AMP GP DUAL TO-99 PKG	28480	1826-0092
A18U8	1826-0092	3		IC OP AMP GP DUAL TO-99 PKG	28480	1826-0092
A18VR1	1902-0064	1	1	DIODE-ZNR 7.5V 5% DO-35 PD=.4W TC=+.05%	28480	1902-0064
A18VR2	1902-0041	4	1	DIODE-ZNR 5.11V 5% DO-35 PD=.4W	28480	1902-0041
A18VR3	1902-3182	0	2	DIODE-ZNR 12.1V 5% DO-35 PD=.4W	28480	1902-3182
A18VR4	1902-0025	4	1	DIODE-ZNR 10V 5% DO-35 PD=.4W TC=+.06%	28480	1902-0025
A18VR5	1902-3182	0		DIODE-ZNR 12.1V 5% DO-35 PD=.4W	28480	1902-3182

See introduction to this section for ordering information
*Indicates factory selected value

Table 6-3. Replaceable Parts

Reference Designation	HP Part Number	C D	Qty	Description	Mfr Code	Mfr Part Number
A19	08565-60022	6	1	YIG DRIVER ASSEMBLY	28480	08565-60022
A19C1	0160-3466	8	2	CAPACITOR-FXD 100PF +-10% 1KVDC CER	28480	0160-3466
A19C2	0160-0163	6	1	CAPACITOR-FXD .033UF +-10% 200VDC POLYE	28480	0160-0163
A19C3	0160-0174	9	1	CAPACITOR-FXD .47UF +80-20% 25VDC CER	28480	0160-0174
A19C4	0160-3466	8		CAPACITOR-FXD 100PF +-10% 1KVDC CER	28480	0160-3466
A19C5	0180-2208	6	3	CAPACITOR-FXD 220UF+-10% 10VDC TA	56289	150D227X9010S2
A19C6	0180-2208	6		CAPACITOR-FXD 220UF+-10% 10VDC TA	56289	150D227X9010S2
A19C7	0180-2208	6		CAPACITOR-FXD 220UF+-10% 10VDC TA	56289	150D227X9010S2
A19C8	0180-1746	5	3	CAPACITOR-FXD 15UF+-10% 20VDC TA	56289	150D156X9020B2
A19C9	0180-1746	5		CAPACITOR-FXD 15UF+-10% 20VDC TA	56289	150D156X9020B2
A19C10	0180-1746	5		CAPACITOR-FXD 15UF+-10% 20VDC TA	56289	150D156X9020B2
A19C11	0180-1731	8	2	CAPACITOR-FXD 4.7UF+-10% 50VDC TA	56289	150D475X9050B2
A19C12	0180-1731	8		CAPACITOR-FXD 4.7UF+-10% 50VDC TA	56289	150D475X9050B2
A19CR1	1901-0050	3	8	DIODE-SWITCHING 80V 200MA 2NS DO-35	28480	1901-0050
A19CR2	1901-0050	3		DIODE-SWITCHING 80V 200MA 2NS DO-35	28480	1901-0050
A19CR3	1901-0050	3		DIODE-SWITCHING 80V 200MA 2NS DO-35	28480	1901-0050
A19CR4	1901-0050	3		DIODE-SWITCHING 80V 200MA 2NS DO-35	28480	1901-0050
A19CR5	1901-0050	3		DIODE-SWITCHING 80V 200MA 2NS DO-35	28480	1901-0050
A19CR6	1901-0050	3		DIODE-SWITCHING 80V 200MA 2NS DO-35	28480	1901-0050
A19CR7	1901-0050	3		DIODE-SWITCHING 80V 200MA 2NS DO-35	28480	1901-0050
A19CR8	1901-0050	3		DIODE-SWITCHING 80V 200MA 2NS DO-35	28480	1901-0050
A19E1	0340-0038	6	4	TERMINAL-STUD DBL-TUR PRESS-MTG	28480	0340-0038
A19E2	0340-0038	6		TERMINAL-STUD DBL-TUR PRESS-MTG	28480	0340-0038
A19E3	0340-0060	4	10	TERMINAL-STUD SPCL-FDTHRU PRESS-MTG	98291	011-6809 000 209
A19E4	0340-0060	4		TERMINAL-STUD SPCL-FDTHRU PRESS-MTG	98291	011-6809 000 209
A19E5	0340-0060	4		TERMINAL-STUD SPCL-FDTHRU PRESS-MTG	98291	011-6809 000 209
A19E6	0340-0038	6		TERMINAL-STUD DBL-TUR PRESS-MTG	28480	0340-0038
A19E7	0340-0038	6		TERMINAL-STUD DBL-TUR PRESS-MTG	28480	0340-0038
A19E8	0340-0060	4		TERMINAL-STUD SPCL-FDTHRU PRESS-MTG	98291	011-6809 000 209
A19E9	0340-0060	4		TERMINAL-STUD SPCL-FDTHRU PRESS-MTG	98291	011-6809 000 209
A19E10	0340-0060	4		TERMINAL-STUD SPCL-FDTHRU PRESS-MTG	98291	011-6809 000 209
A19E11	0340-0060	4		TERMINAL-STUD SPCL-FDTHRU PRESS-MTG	98291	011-6809 000 209
A19E12	0340-0060	4		TERMINAL-STUD SPCL-FDTHRU PRESS-MTG	98291	011-6809 000 209
A19E13	0340-0060	4		TERMINAL-STUD SPCL-FDTHRU PRESS-MTG	98291	011-6809 000 209
A19E14	0340-0060	4		TERMINAL-STUD SPCL-FDTHRU PRESS-MTG	98291	011-6809 000 209
A19K1	0490-0884	7	1	RELAY-REED 1A 500MA 250VAC 24VDC-COIL	28480	0490-0884
A19L1	9140-0210	1	3	INDUCTOR RF-CH-MLD 100UH 5% .166DX.385LG	28480	9140-0210
A19L2	9140-0210	1		INDUCTOR RF-CH-MLD 100UH 5% .166DX.385LG	28480	9140-0210
A19L3	9140-0210	1		INDUCTOR RF-CH-MLD 100UH 5% .166DX.385LG	28480	9140-0210
A19MP1	08565-00010	6	1	BRACKET-HEAT SINK	28480	08565-00010
A19Q1	1853-0038	4	4	TRANSISTOR PNP SI TO-39 PD=1W FT=100MHZ	28480	1653-0038
A19Q2	1853-0038	4		TRANSISTOR PNP SI TO-39 PD=1W FT=100MHZ	28480	1853-0038
A19Q3	1853-0414	0	2	TRANSISTOR PNP 2N6423 SI TO-66 PD=35W	04713	2N6423
A19Q4	1853-0038	4		TRANSISTOR PNP SI TO-39 PD=1W FT=100MHZ	28480	1853-0038
A19Q5	1853-0038	4		TRANSISTOR PNP SI TO-39 PD=1W FT=100MHZ	28480	1853-0038
A19Q6	1853-0414	0		TRANSISTOR PNP 2N6423 SI TO-66 PD=35W	04713	2N6423
A19R1	0757-0465	6	2	RESISTOR 100K 1% .125W F TC=0+-100	24546	C4-1/8-T0-1003-F
A19R2	0698-8833	2	6	RESISTOR 10K .1% .125W F TC=0+-10	28480	0698-8833
A19R3	0698-8833	2		RESISTOR 10K .1% .125W F TC=0+-10	28480	0698-8833
A19R4	0698-8835	4	3	RESISTOR 5K .1% .125W F TC=0+-10	28480	0698-8835
A19R5	2100-2039	5	4	RESISTOR-TRMR 20K 5% WW SIDE-ADJ 10-TRN	28480	2100-2039
A19R6	0698-8810	5	1	RESISTOR 27.4K .1% .125W F TC=0+-15	28480	0698-8810
A19R7	0698-8900	4	1	RESISTOR 3.53K .1% .125W F TC=0+-10	28480	0698-8900
A19R8	2100-2039	5		RESISTOR-TRMR 20K 5% WW SIDE-ADJ 10-TRN	28480	2100-2039
A19R9	0698-8809	2	1	RESISTOR 31.5K .1% .125W F TC=0+-15	28480	0698-8809
A19R10	0698-8831	0	1	RESISTOR 13.4K .1% .125W F TC=0+-10	28480	0698-8831
A19R11	0698-8811	6	1	RESISTOR 5.25K .1% .125W F TC=0+-10	28480	0698-8811
A19R12	0698-8835	4		RESISTOR 5K .1% .125W F TC=0+-10	28480	0698-8835
A19R13	0698-8829	6	1	RESISTOR 20K .1% .125W F TC=0+-10	28480	0698-8829
A19R14	2100-2039	5		RESISTOR-TRMR 20K 5% WW SIDE-ADJ 10-TRN	28480	2100-2039
A19R15	0698-8902	6	1	RESISTOR 48K .1% .125W F TC=0+-15	28480	0698-8902
A19R16	0698-8901	5	1	RESISTOR 29.7K .1% .125W F TC=0+-10	28480	0698-8901
A19R17	2100-2039	5		RESISTOR-TRMR 20K 5% WW SIDE-ADJ 10-TRN	28480	2100-2039
A19R18	0698-8898	9	1	RESISTOR 22.6K .1% .125W F TC=0+-10	28480	0698-8898
A19R19	0698-8899	0	1	RESISTOR 15.3K .1% .125W F TC=0+-10	28480	0698-8899
A19R20	0698-3162	0	1	RESISTOR 46.4K 1% .125W F TC=0+-100	24546	C4-1/8-T0-4642-F
A19R21	0757-0123	3	2	RESISTOR 34.8K 1% .125W F TC=0+-100	28480	0757-0123
A19R22	0757-0123	3		RESISTOR 34.8K 1% .125W F TC=0+-100	28480	0757-0123
A19R23	0683-1855	3	1	RESISTOR 1.8M 5% .25W FC TC=-900/+1100	01121	CB1855
A19R24	0698-3260	9	1	RESISTOR 464K 1% .125W F TC=0+-100	28480	0698-3260
A19R25	0698-8835	4		RESISTOR 5K .1% .125W F TC=0+-10	28480	0698-8835

See introduction to this section for ordering information
*Indicates factory selected value

Table 6-3. Replaceable Parts

Reference Designation	HP Part Number	C D	Qty	Description	Mfr Code	Mfr Part Number
A19R26	0698-8834	3	1	RESISTOR 9K .1% .125W F TC=0+-10	28480	0698-8834
A19R27	0698-8833	2		RESISTOR 10K .1% .125W F TC=0+-10	28480	0698-8833
A19R28	0698-8833	2		RESISTOR 10K .1% .125W F TC=0+-10	28480	0698-8833
A19R29	0698-8830	9	2	RESISTOR 14.4K .1% .125W F TC=0+-10	28480	0698-8830
A19R30	0698-8830	9		RESISTOR 14.4K .1% .125W F TC=0+-10	28480	0698-8830
A19R31	0757-0442	9	2	RESISTOR 10K 1% .125W F TC=0+-100	24546	C4-1/8-T0-1002-F
A19R32	0757-0290	5	2	RESISTOR 6.19K 1% .125W F TC=0+-100	19701	MF4C1/8-T0-6191-F
A19R33	0698-3439	4	2	RESISTOR 178 1% .125W F TC=0+-100	24546	C4-1/8-T0-178R-F
A19R34	0811-3476	1	1	RESISTOR 150 1% 25W PW TC=0+-2	28480	0811-3476
A19R35	0698-3431	6	1	RESISTOR 23.7 1% .125W F TC=0+-100	03888	PME55-1/8-T0-23R7-F
A19R36	0757-0465	6		RESISTOR 100K 1% .125W F TC=0+-100	24546	C4-1/8-T0-1003-F
A19R37*	0698-0083	8	5	RESISTOR 1.96K 1% .125W F TC=0+-100	24546	C4-1/8-T0-1961-F
				(MIGHT BE LOADED AS OPEN)		
A19R38	0698-3449	6	1	RESISTOR 28.7K 1% .125W F TC=0+-100	24546	C4-1/8-T0-2872-F
A19R39	2100-1972	3	5	RESISTOR-TRMR 20K 10% WW SIDE-ADJ 20-TRN	02660	3810P-203
A19R40*	0698-0083	8		RESISTOR 1.96K 1% .125W F TC=0+-100	24546	C4-1/8-T0-1961-F
				(MIGHT BE LOADED AS OPEN)		
A19R41	0698-3136	8	1	RESISTOR 17.8K 1% .125W F TC=0+-100	24546	C4-1/8-T0-1782-F
A19R42	2100-1972	3		RESISTOR-TRMR 20K 10% WW SIDE-ADJ 20-TRN	02660	3810P-203
A19R43*	0698-0083	8		RESISTOR 1.96K 1% .125W F TC=0+-100	24546	C4-1/8-T0-1961-F
				(MIGHT BE LOADED AS OPEN)		
A19R44	0698-3156	2	1	RESISTOR 14.7K 1% .125W F TC=0+-100	24546	C4-1/8-T0-1472-F
A19R45	2100-1972	3		RESISTOR-TRMR 20K 10% WW SIDE-ADJ 20-TRN	02660	3810P-203
A19R46*	0698-0083	8		RESISTOR 1.96K 1% .125W F TC=0+-100	24546	C4-1/8-T0-1961-F
A19R47	0757-0444	1	1	RESISTOR 12.1K 1% .125W F TC=0+-100	24546	C4-1/8-T0-1212-F
A19R48	2100-1972	3		RESISTOR-TRMR 20K 10% WW SIDE-ADJ 20-TRN	02660	3810P-203
A19R49*	0698-0083	8		RESISTOR 1.96K 1% .125W F TC=0+-100	24546	C4-1/8-T0-1961-F
A19R50	0757-0443	0	1	RESISTOR 11K 1% .125W F TC=0+-100	24546	C4-1/8-T0-1102-F
A19R51	2100-1972	3		RESISTOR-TRMR 20K 10% WW SIDE-ADJ 20-TRN	02660	3810P-203
A19R52	0698-8833	2		RESISTOR 10K .1% .125W F TC=0+-10	28480	0698-8833
A19R53	0698-8833	2		RESISTOR 10K .1% .125W F TC=0+-10	28480	0698-8833
A19R54	0698-8836	5	2	RESISTOR 3.7K .1% .125W F TC=0+-10	28480	0698-8836
A19R55	0698-8836	5		RESISTOR 3.7K .1% .125W F TC=0+-10	28480	0698-8836
A19R56	0757-0442	9		RESISTOR 10K 1% .125W F TC=0+-100	24546	C4-1/8-T0-1002-F
A19R57	0757-0290	5		RESISTOR 6.19K 1% .125W F TC=0+-100	19701	MF4C1/8-T0-6191-F
A19R58	0698-3439	4		RESISTOR 178 1% .125W F TC=0+-100	24546	C4-1/8-T0-178R-F
A19R59	0811-3477	2	1	RESISTOR 25 1% 25W PW TC=0+-2	28480	0811-3477
A19S1	3101-1274	1	1	SWITCH-SL SPDT SUBMIN 2A 120VAC PC	28480	3101-1274
A19TP1	0360-0077	5	1	TERMINAL-STUD SGL-TUR SWGFRM-MTG	28480	0360-0077
A19TP2	1251-0600	0	10	CONNECTOR-SGL CONT PIN 1.14-MM-BSC-SZ SQ	28480	1251-0600
A19TP3	1251-0600	0		CONNECTOR-SGL CONT PIN 1.14-MM-BSC-SZ SQ	28480	1251-0600
A19TP4	1251-0600	0		CONNECTOR-SGL CONT PIN 1.14-MM-BSC-SZ SQ	28480	1251-0600
A19TP5	1251-0600	0		CONNECTOR-SGL CONT PIN 1.14-MM-BSC-SZ SQ	28480	1251-0600
A19TP6	1251-0600	0		CONNECTOR-SGL CONT PIN 1.14-MM-BSC-SZ SQ	28480	1251-0600
A19TP7	1251-0600	0		CONNECTOR-SGL CONT PIN 1.14-MM-BSC-SZ SQ	28480	1251-0600
A19TP8	1251-0600	0		CONNECTOR-SGL CONT PIN 1.14-MM-BSC-SZ SQ	28480	1251-0600
A19TP9	1251-0600	0		CONNECTOR-SGL CONT PIN 1.14-MM-BSC-SZ SQ	28480	1251-0600
A19TP10	1251-0600	0		CONNECTOR-SGL CONT PIN 1.14-MM-BSC-SZ SQ	28480	1251-0600
A19TP11	1251-0600	0		CONNECTOR-SGL CONT PIN 1.14-MM-BSC-SZ SQ	28480	1251-0600
A19U1	1826-0261	8	5	IC OP AMP LOW-NOISE TO-99 PKG	28480	1826-0261
A19U2	1826-0261	8		IC OP AMP LOW-NOISE TO-99 PKG	28480	1826-0261
A19U3	1826-0261	8		IC OP AMP LOW-NOISE TO-99 PKG	28480	1826-0261
A19U4	1826-0261	8		IC OP AMP LOW-NOISE TO-99 PKG	28480	1826-0261
A19U5	1826-0261	8		IC OP AMP LOW-NOISE TO-99 PKG	28480	1826-0261
A19VR1	1902-0025	4	1	DIODE-ZNR 10V 5% DO-35 PD=.4W TC=+.06%	28480	1902-0025
A19VR2	1902-3203	6	1	DIODE-ZNR 14.7V 5% DO-35 PD=.4W	28480	1902-3203
A19VR3	1902-0197	1	2	DIODE-ZNR 82V 5% PD=1W IR=5UA	28480	1902-0197
A19VR4	1902-0197	1		DIODE-ZNR 82V 5% PD=1W IR=5UA	28480	1902-0197
				A19 MISCELLANEOUS PARTS		
	0340-0039	7	4	TERMINAL BUSHING - TEFLON; MOUNTS IN	28480	0340-0039
	0340-0416	4	2	INSULATOR-XSTR THERMA-FILM	28480	0340-0416
	1480-0073	6	1	PIN-ROLL .062-IN-DIA .25-IN-LG BE-CU	28480	1480-0073
	2190-0003	8	8	WASHER-LK HLCL NO. 4 .115-IN-ID	28480	2190-0003
	2200-0109	8	8	SCREW-MACH 4-40 .438-IN-LG PAN-HD-POZI	00000	ORDER BY DESCRIPTION
	2260-0002	6	8	NUT-HEX-DBL-CHAM 4-40-THD .062-IN-THK	00000	ORDER BY DESCRIPTION
	4040-0748	3	1	EXTR-PC BD BLK POLYC .062-BD-THKNS	28480	4040-0748
	6040-0239	9		LUBRICANT-GREASE SIL	05820	120

See introduction to this section for ordering information
*Indicates factory selected value

Table 6-3. Replaceable Parts

Reference Designation	HP Part Number	C D	Qty	Description	Mfr Code	Mfr Part Number
A20	08569-60055	9	1	BIAS ASSEMBLY	28480	08569-60055
A20C1	0160-3879	7	4	CAPACITOR-FXD .01UF +-20% 100VDC CER	28480	0160-3879
A20C2	0160-3879	7		CAPACITOR-FXD .01UF +-20% 100VDC CER	28480	0160-3879
A20C3	0160-3879	7		CAPACITOR-FXD .01UF +-20% 100VDC CER	28480	0160-3879
A20C4	0160-3879	7		CAPACITOR-FXD .01UF +-20% 100VDC CER	28480	0160-3879
A20C5	0160-4084	8	1	CAPACITOR-FXD .1UF +-20% 50VDC CER	28480	0160-4084
A20C6	0180-1746	5	2	CAPACITOR-FXD 15UF+-10% 20VDC TA	56289	150D156X9020B2
A20C7	0180-1746	5		CAPACITOR-FXD 15UF+-10% 20VDC TA	56289	150D156X9020B2
A20C8	0160-0127	2	1	CAPACITOR-FXD 1UF +-20% 25VDC CER	28480	0160-0127
A20C9	0180-0197	8	1	CAPACITOR-FXD 2.2UF+-10% 20VDC TA	56289	150D225X9020A2
A20C10	0180-0291	3	2	CAPACITOR-FXD 1UF+-10% 35VDC TA	56289	150D105X9035A2
A20C11	0180-0291	3		CAPACITOR-FXD 1UF+-10% 35VDC TA	56289	150D105X9035A2
A20CR1	1901-0050	3	27	DIODE-SWITCHING 80V 200MA 2NS DO-35	28480	1901-0050
A20CR2	1901-0050	3		DIODE-SWITCHING 80V 200MA 2NS DO-35	28480	1901-0050
A20CR3	1901-0050	3		DIODE-SWITCHING 80V 200MA 2NS DO-35	28480	1901-0050
A20CR4	1901-0050	3		DIODE-SWITCHING 80V 200MA 2NS DO-35	28480	1901-0050
A20CR5	1901-0050	3		DIODE-SWITCHING 80V 200MA 2NS DO-35	28480	1901-0050
A20CR6	1901-0050	3		DIODE-SWITCHING 80V 200MA 2NS DO-35	28480	1901-0050
A20CR7	1901-0050	3		DIODE-SWITCHING 80V 200MA 2NS DO-35	28480	1901-0050
A20CR8	1901-0050	3		DIODE-SWITCHING 80V 200MA 2NS DO-35	28480	1901-0050
A20CR9	1901-0050	3		DIODE-SWITCHING 80V 200MA 2NS DO-35	28480	1901-0050
A20CR10	1901-0050	3		DIODE-SWITCHING 80V 200MA 2NS DO-35	28480	1901-0050
A20CR11	1901-0050	3		DIODE-SWITCHING 80V 200MA 2NS DO-35	28480	1901-0050
A20CR12	1901-0050	3		DIODE-SWITCHING 80V 200MA 2NS DO-35	28480	1901-0050
A20CR13	1901-0050	3		DIODE-SWITCHING 80V 200MA 2NS DO-35	28480	1901-0050
A20CR14	1901-0050	3		DIODE-SWITCHING 80V 200MA 2NS DO-35	28480	1901-0050
A20CR15	1901-0050	3		DIODE-SWITCHING 80V 200MA 2NS DO-35	28480	1901-0050
A20CR16	1901-0050	3		DIODE-SWITCHING 80V 200MA 2NS DO-35	28480	1901-0050
A20CR17	1901-0050	3		DIODE-SWITCHING 80V 200MA 2NS DO-35	28480	1901-0050
A20CR18	1901-0050	3		DIODE-SWITCHING 80V 200MA 2NS DO-35	28480	1901-0050
A20CR19	1901-0050	3		DIODE-SWITCHING 80V 200MA 2NS DO-35	28480	1901-0050
A20CR20	1901-0050	3		DIODE-SWITCHING 80V 200MA 2NS DO-35	28480	1901-0050
A20CR21	1901-0050	3		DIODE-SWITCHING 80V 200MA 2NS DO-35	28480	1901-0050
A20CR22	1901-0050	3		DIODE-SWITCHING 80V 200MA 2NS DO-35	28480	1901-0050
A20CR23	1901-0050	3		DIODE-SWITCHING 80V 200MA 2NS DO-35	28480	1901-0050
A20CR24	1901-0050	3		DIODE-SWITCHING 80V 200MA 2NS DO-35	28480	1901-0050
A20CR25	1901-0050	3		DIODE-SWITCHING 80V 200MA 2NS DO-35	28480	1901-0050
A20CR26	1901-0050	3		DIODE-SWITCHING 80V 200MA 2NS DO-35	28480	1901-0050
A20CR27	1901-0050	3		DIODE-SWITCHING 80V 200MA 2NS DO-35	28480	1901-0050
A20L1	9140-0210	1	3	INDUCTOR RF-CH-MLD 100UH 5% .166DX.385LG	28480	9140-0210
A20L2	9140-0210	1		INDUCTOR RF-CH-MLD 100UH 5% .166DX.385LG	28480	9140-0210
A20L3	9140-0210	1		INDUCTOR RF-CH-MLD 100UH 5% .166DX.385LG	28480	9140-0210
A20MP1	0403-0026	6	1	PLUG-HOLE BDR-HD FOR .187-D-HOLE NYL	02768	207-120241-03-0101
A20MP2	1480-0073	6	2	PIN-ROLL .062-IN-DIA .25-IN-LG BE-CU	28480	1480-0073
A20MP3	4040-0748	3	1	EXTRACTOR-PC BOARD (BLACK)	28480	4040-0748
A20MP4	4040-0756	3	1	EXTRACTOR-PC BOARD (WHITE)	28480	4040-0756
A20MP5	2360-0195	0	2	SCREW-MACH 6-32 .312-IN-LG PAN-HD-POZI	00000	ORDER BY DESCRIPTION
A20MP6	2420-0003	7	2	NUT-HEX-DBL-CHAM 6-32-THD .094-IN-THK	00000	ORDER BY DESCRIPTION
A20MP8	2190-0007	2	2	WASHER-LK INTL T NO. 6 .141-IN-ID	28480	2190-0007
A20MP9	0380-1162	3	2	STANDOFF-RVT-ON .35-IN-LG 4-40THD	00000	ORDER BY DESCRIPTION
A20Q1	1855-0081	1	10	TRANSISTOR J-FET N-CHAN D-MODE SI	28480	1855-0081
A20Q2	1855-0081	1		TRANSISTOR J-FET N-CHAN D-MODE SI	28480	1855-0081
A20Q3	1855-0081	1		TRANSISTOR J-FET N-CHAN D-MODE SI	28480	1855-0081
A20Q4	1855-0081	1		TRANSISTOR J-FET N-CHAN D-MODE SI	28480	1855-0081
A20Q5	1854-0477	7	1	TRANSISTOR NPN 2N2222A SI TO-18 PD=500MW	04713	2N2222A
A20Q6	1854-0404	0	5	TRANSISTOR NPN SI TO-18 PD=360MW	28480	1854-0404
A20Q7	1854-0404	0		TRANSISTOR NPN SI TO-18 PD=360MW	28480	1854-0404
A20Q9	1854-0404	0		TRANSISTOR NPN SI TO-18 PD=360MW	28480	1854-0404
A20Q10	1855-0081	1		TRANSISTOR J-FET N-CHAN D-MODE SI	28480	1855-0081
A20Q11	1855-0081	1		TRANSISTOR J-FET N-CHAN D-MODE SI	28480	1855-0081
A20Q12	1854-0404	0		TRANSISTOR NPN SI TO-18 PD=360MW	28480	1854-0404
A20Q13	1854-0022	8	1	TRANSISTOR NPN SI TO-39 PD=700MW	07263	S17843
A20Q14	1854-0404	0		TRANSISTOR NPN SI TO-18 PD=360MW	28480	1854-0404
A20Q15	1855-0081	1		TRANSISTOR J-FET N-CHAN D-MODE SI	28480	1855-0081
A20Q16	1855-0081	1		TRANSISTOR J-FET N-CHAN D-MODE SI	28480	1855-0081
A20Q17	1855-0081	1		TRANSISTOR J-FET N-CHAN D-MODE SI	28480	1855-0081
A20Q18	1855-0081	1		TRANSISTOR J-FET N-CHAN D-MODE SI	28480	1855-0081
A20R1	0698-3162	0	1	RESISTOR 46.4K 1% .125W F TC=0+-100	24546	C4-1/8-T0-4642-F
A20R2	0698-3160	8	21	RESISTOR 31.6K 1% .125W F TC=0+-100	24546	C4-1/8-T0-3162-F
A20R3	0698-3160	8		RESISTOR 31.6K 1% .125W F TC=0+-100	24546	C4-1/8-T0-3162-F
A20R4	0698-3160	8		RESISTOR 31.6K 1% .125W F TC=0+-100	24546	C4-1/8-T0-3162-F
A20R5	0757-0442	9	10	RESISTOR 10K 1% .125W F TC=0+-100	24546	C4-1/8-T0-1002-F

See introduction to this section for ordering information
*Indicates factory selected value

Table 6-3. Replaceable Parts

Reference Designation	HP Part Number	C D	Qty	Description	Mfr Code	Mfr Part Number
A20R6	0757-0441	8	3	RESISTOR 8.25K 1% .125W F TC=0+-100	24546	C4-1/8-T0-8251-F
A20R7	0757-0444	1	2	RESISTOR 12.1K 1% .125W F TC=0+-100	24546	C4-1/8-T0-1212-F
A20R8	0698-7284	5	4	RESISTOR 100K 1% .05W F TC=0+-100	24546	C3-1/8-T0-1003-F
A20R9	2100-1972	3	25	RESISTOR-TRMR 20K 10% WW SIDE-ADJ 20-TRN	02660	3810P-203
A20R10	2100-1972	3		RESISTOR-TRMR 20K 10% WW SIDE-ADJ 20-TRN	02660	3810P-203
A20R11	0698-3160	8		RESISTOR 31.6K 1% .125W F TC=0+-100	24546	C4-1/8-T0-3162-F
A20R12	0698-3160	8		RESISTOR 31.6K 1% .125W F TC=0+-100	24546	C4-1/8-T0-3162-F
A20R13	0698-3160	8		RESISTOR 31.6K 1% .125W F TC=0+-100	24546	C4-1/8-T0-3162-F
A20R14	2100-1972	3		RESISTOR-TRMR 20K 10% WW SIDE-ADJ 20-TRN	02660	3810P-203
A20R15	0698-3260	9	14	RESISTOR 464K 1% .125W F TC=0+-100	28480	0698-3260
A20R16	0757-0465	6	23	RESISTOR 100K 1% .125W F TC=0+-100	24546	C4-1/8-T0-1003-F
A20R17	0698-3157	3	19	RESISTOR 19.6K 1% .125W F TC=0+-100	24546	C4-1/8-T0-1962-F
A20R18	2100-1972	3		RESISTOR-TRMR 20K 10% WW SIDE-ADJ 20-TRN	02660	3810P-203
A20R19	0698-3160	8		RESISTOR 31.6K 1% .125W F TC=0+-100	24546	C4-1/8-T0-3162-F
A20R20	0698-3156	2	6	RESISTOR 14.7K 1% .125W F TC=0+-100	24546	C4-1/8-T0-1472-F
A20R21	0698-3160	8		RESISTOR 31.6K 1% .125W F TC=0+-100	24546	C4-1/8-T0-3162-F
A20R22	2100-1972	3		RESISTOR-TRMR 20K 10% WW SIDE-ADJ 20-TRN	02660	3810P-203
A20R23	0698-3260	9		RESISTOR 464K 1% .125W F TC=0+-100	28480	0698-3260
A20R24	0757-0465	6		RESISTOR 100K 1% .125W F TC=0+-100	24546	C4-1/8-T0-1003-F
A20R25	0698-3157	3		RESISTOR 19.6K 1% .125W F TC=0+-100	24546	C4-1/8-T0-1962-F
A20R26	2100-1972	3		RESISTOR-TRMR 20K 10% WW SIDE-ADJ 20-TRN	02660	3810P-203
A20R27	0698-3160	8		RESISTOR 31.6K 1% .125W F TC=0+-100	24546	C4-1/8-T0-3162-F
A20R28	0698-3156	2		RESISTOR 14.7K 1% .125W F TC=0+-100	24546	C4-1/8-T0-1472-F
A20R29	0698-3160	8		RESISTOR 31.6K 1% .125W F TC=0+-100	24546	C4-1/8-T0-3162-F
A20R30	2100-1972	3		RESISTOR-TRMR 20K 10% WW SIDE-ADJ 20-TRN	02660	3810P-203
A20R31	0698-3260	9		RESISTOR 464K 1% .125W F TC=0+-100	28480	0698-3260
A20R32	0757-0465	6		RESISTOR 100K 1% .125W F TC=0+-100	24546	C4-1/8-T0-1003-F
A20R33	0757-0441	8		RESISTOR 8.25K 1% .125W F TC=0+-100	24546	C4-1/8-T0-8251-F
A20R34	0698-3157	3		RESISTOR 19.6K 1% .125W F TC=0+-100	24546	C4-1/8-T0-1962-F
A20R35	2100-1972	3		RESISTOR-TRMR 20K 10% WW SIDE-ADJ 20-TRN	02660	3810P-203
A20R36	2100-1972	3		RESISTOR-TRMR 20K 10% WW SIDE-ADJ 20-TRN	02660	3810P-203
A20R37	0698-3160	8		RESISTOR 31.6K 1% .125W F TC=0+-100	24546	C4-1/8-T0-3162-F
A20R38	0698-3160	8		RESISTOR 31.6K 1% .125W F TC=0+-100	24546	C4-1/8-T0-3162-F
A20R39	0698-3160	8		RESISTOR 31.6K 1% .125W F TC=0+-100	24546	C4-1/8-T0-3162-F
A20R40	2100-1972	3		RESISTOR-TRMR 20K 10% WW SIDE-ADJ 20-TRN	02660	3810P-203
A20R41	0698-3260	9		RESISTOR 464K 1% .125W F TC=0+-100	28480	0698-3260
A20R42	0757-0465	6		RESISTOR 100K 1% .125W F TC=0+-100	24546	C4-1/8-T0-1003-F
A20R43	0757-0441	8		RESISTOR 8.25K 1% .125W F TC=0+-100	24546	C4-1/8-T0-8251-F
A20R44	0698-3157	3		RESISTOR 19.6K 1% .125W F TC=0+-100	24546	C4-1/8-T0-1962-F
A20R45	2100-1972	3		RESISTOR-TRMR 20K 10% WW SIDE-ADJ 20-TRN	02660	3810P-203
A20R46	2100-1972	3		RESISTOR-TRMR 20K 10% WW SIDE-ADJ 20-TRN	02660	3810P-203
A20R47	0698-3160	8		RESISTOR 31.6K 1% .125W F TC=0+-100	24546	C4-1/8-T0-3162-F
A20R48	0698-3160	8		RESISTOR 31.6K 1% .125W F TC=0+-100	24546	C4-1/8-T0-3162-F
A20R49	0698-3160	8		RESISTOR 31.6K 1% .125W F TC=0+-100	24546	C4-1/8-T0-3162-F
A20R50	2100-1972	3		RESISTOR-TRMR 20K 10% WW SIDE-ADJ 20-TRN	02660	3810P-203
A20R51	0698-3260	9		RESISTOR 464K 1% .125W F TC=0+-100	28480	0698-3260
A20R52	0757-0465	6		RESISTOR 100K 1% .125W F TC=0+-100	24546	C4-1/8-T0-1003-F
A20R53	0698-3157	3		RESISTOR 19.6K 1% .125W F TC=0+-100	24546	C4-1/8-T0-1962-F
A20R54	0757-0444	1		RESISTOR 12.1K 1% .125W F TC=0+-100	24546	C4-1/8-T0-1212-F
A20R55	2100-1972	3		RESISTOR-TRMR 20K 10% WW SIDE-ADJ 20-TRN	02660	3810P-203
A20R56	2100-1972	3		RESISTOR-TRMR 20K 10% WW SIDE-ADJ 20-TRN	02660	3810P-203
A20R57	0757-0458	7	2	RESISTOR 51.1K 1% .125W F TC=0+-100	24546	C4-1/8-T0-5112-F
A20R58	0757-0458	7		RESISTOR 51.1K 1% .125W F TC=0+-100	24546	C4-1/8-T0-5112-F
A20R59	0698-3160	8		RESISTOR 31.6K 1% .125W F TC=0+-100	24546	C4-1/8-T0-3162-F
A20R60	2100-1972	3		RESISTOR-TRMR 20K 10% WW SIDE-ADJ 20-TRN	02660	3810P-203
A20R61	0698-3260	9		RESISTOR 464K 1% .125W F TC=0+-100	28480	0698-3260
A20R62	0757-0465	6		RESISTOR 100K 1% .125W F TC=0+-100	24546	C4-1/8-T0-1003-F
A20R63	0698-3450	9	1	RESISTOR 42.2K 1% .125W F TC=0+-100	24546	C4-1/8-T0-4222-F
A20R64	0757-0401	0	1	RESISTOR 100 1% .125W F TC=0+-100	24546	C4-1/8-T0-101-F
A20R65	0698-3157	3		RESISTOR 19.6K 1% .125W F TC=0+-100	24546	C4-1/8-T0-1962-F
A20R66	0757-0280	3	1	RESISTOR 1K 1% .125W F TC=0+-100	24546	C4-1/8-T0-1001-F
A20R67	0698-3157	3		RESISTOR 19.6K 1% .125W F TC=0+-100	24546	C4-1/8-T0-1962-F
A20R68	0698-3260	9		RESISTOR 464K 1% .125W F TC=0+-100	28480	0698-3260
A20R69	0757-0465	6		RESISTOR 100K 1% .125W F TC=0+-100	24546	C4-1/8-T0-1003-F
A20R70	0757-0465	6		RESISTOR 100K 1% .125W F TC=0+-100	24546	C4-1/8-T0-1003-F
A20R71	2100-1739	0	4	RESISTOR-TRMR 5K 10% WW SIDE-ADJ 20-TRN	02660	3810P-502
A20R72	0757-0438	3	4	RESISTOR 5.11K 1% .125W F TC=0+-100	24546	C4-1/8-T0-5111-F
A20R73	0757-0465	6		RESISTOR 100K 1% .125W F TC=0+-100	24546	C4-1/8-T0-1003-F
A20R74	0757-0442	9		RESISTOR 10K 1% .125W F TC=0+-100	24546	C4-1/8-T0-1002-F
A20R75	0757-0442	9		RESISTOR 10K 1% .125W F TC=0+-100	24546	C4-1/8-T0-1002-F
A20R76	0698-3434	9	2	RESISTOR 34.8 1% .125W F TC=0+-100	24546	C4-1/8-T0-34R8-F
A20R77	2100-1972	3		RESISTOR-TRMR 20K 10% WW SIDE-ADJ 20-TRN	02660	3810P-203
A20R78	0757-0442	9		RESISTOR 10K 1% .125W F TC=0+-100	24546	C4-1/8-T0-1002-F
A20R79	0698-3157	3		RESISTOR 19.6K 1% .125W F TC=0+-100	24546	C4-1/8-T0-1962-F
A20R80	0698-0083	8	1	RESISTOR 1.96K 1% .125W F TC=0+-100	24546	C4-1/8-T0-1961-F

See introduction to this section for ordering information
*Indicates factory selected value

Table 6-3. Replaceable Parts

Reference Designation	HP Part Number	C D	Qty	Description	Mfr Code	Mfr Part Number
A20R81	0698-3157	3		RESISTOR 19.6K 1% .125W F TC=0+-100	24546	C4-1/8-T0-1962-F
A20R82	0698-3260	9		RESISTOR 464K 1% .125W F TC=0+-100	28480	0698-3260
A20R83	0757-0465	6		RESISTOR 100K 1% .125W F TC=0+-100	24546	C4-1/8-T0-1003-F
A20R84	0757-0465	6		RESISTOR 100K 1% .125W F TC=0+-100	24546	C4-1/8-T0-1003-F
A20R85	2100-1739	0		RESISTOR-TRMR 5K 10% WW SIDE-ADJ 20-TRN	02660	3810P-502
A20R86	0757-0438	3		RESISTOR 5.11K 1% .125W F TC=0+-100	24546	C4-1/8-T0-5111-F
A20R87	0757-0465	6		RESISTOR 100K 1% .125W F TC=0+-100	24546	C4-1/8-T0-1003-F
A20R88	0757-0442	9		RESISTOR 10K 1% .125W F TC=0+-100	24546	C4-1/8-T0-1002-F
A20R89	0757-0442	9		RESISTOR 10K 1% .125W F TC=0+-100	24546	C4-1/8-T0-1002-F
A20R90	0698-4037	0	1	RESISTOR 46.4 1% .125W F TC=0+-100	24546	C4-1/8-T0-46R4-F
A20R91	0698-3157	3		RESISTOR 19.6K 1% .125W F TC=0+-100	24546	C4-1/8-T0-1962-F
A20R92	0698-3260	9		RESISTOR 464K 1% .125W F TC=0+-100	28480	0698-3260
A20R93	0757-0465	6		RESISTOR 100K 1% .125W F TC=0+-100	24546	C4-1/8-T0-1003-F
A20R94	0757-0465	6		RESISTOR 100K 1% .125W F TC=0+-100	24546	C4-1/8-T0-1003-F
A20R95	2100-1739	0		RESISTOR-TRMR 5K 10% WW SIDE-ADJ 20-TRN	02660	3810P-502
A20R96	0757-0438	3		RESISTOR 5.11K 1% .125W F TC=0+-100	24546	C4-1/8-T0-5111-F
A20R97	0757-0465	6		RESISTOR 100K 1% .125W F TC=0+-100	24546	C4-1/8-T0-1003-F
A20R98	0757-0442	9		RESISTOR 10K 1% .125W F TC=0+-100	24546	C4-1/8-T0-1002-F
A20R99	0757-0442	9		RESISTOR 10K 1% .125W F TC=0+-100	24546	C4-1/8-T0-1002-F
A20R100	0698-3434	9		RESISTOR 34.8 1% .125W F TC=0+-100	24546	C4-1/8-T0-34R8-F
A20R101	0698-3157	3		RESISTOR 19.6K 1% .125W F TC=0+-100	24546	C4-1/8-T0-1962-F
A20R102	0698-3260	9		RESISTOR 464K 1% .125W F TC=0+-100	28480	0698-3260
A20R103	0757-0465	6		RESISTOR 100K 1% .125W F TC=0+-100	24546	C4-1/8-T0-1003-F
A20R104	0757-0465	6		RESISTOR 100K 1% .125W F TC=0+-100	24546	C4-1/8-T0-1003-F
A20R105	2100-1739	0		RESISTOR-TRMR 5K 10% WW SIDE-ADJ 20-TRN	02660	3810P-502
A20R106	0757-0438	3		RESISTOR 5.11K 1% .125W F TC=0+-100	24546	C4-1/8-T0-5111-F
A20R107	0757-0465	6		RESISTOR 100K 1% .125W F TC=0+-100	24546	C4-1/8-T0-1003-F
A20R108	0757-0442	9		RESISTOR 10K 1% .125W F TC=0+-100	24546	C4-1/8-T0-1002-F
A20R109	0757-0442	9		RESISTOR 10K 1% .125W F TC=0+-100	24546	C4-1/8-T0-1002-F
A20R110	0698-3431	6	1	RESISTOR 23.7 1% .125W F TC=0+-100	03888	PME55-1/8-T0-23R7-F
A20R111	0757-0290	5	1	RESISTOR 6.19K 1% .125W F TC=0+-100	19701	MF4C1/8-T0-6191-F
A20R113	0757-0420	3	1	RESISTOR 750 1% .125W F TC=0+-100	24546	C4-1/8-T0-751-F
A20R114	0757-0465	6		RESISTOR 100K 1% .125W F TC=0+-100	24546	C4-1/8-T0-1003-F
A20R115	0698-3445	2	1	RESISTOR 348 1% .125W F TC=0+-100	24546	C4-1/8-T0-348R-F
A20R116	0698-3453	2	1	RESISTOR 196K 1% .125W F TC=0+-100	24546	C4-1/8-T0-1963-F
A20R117	0698-8821	8	1	RESISTOR 5.62 1% .125W F TC=0+-100	28480	0698-8821
A20R118	0698-3157	3		RESISTOR 19.6K 1% .125W F TC=0+-100	24546	C4-1/8-T0-1962-F
A20R119	2100-1972	3		RESISTOR-TRMR 20K 10% WW SIDE-ADJ 20-TRN	02660	3810P-203
A20R120	0698-3160	8		RESISTOR 31.6K 1% .125W F TC=0+-100	24546	C4-1/8-T0-3162-F
A20R121	0698-3157	3		RESISTOR 19.6K 1% .125W F TC=0+-100	24546	C4-1/8-T0-1962-F
A20R122	0698-3156	2		RESISTOR 14.7K 1% .125W F TC=0+-100	24546	C4-1/8-T0-1472-F
A20R123	2100-1972	3		RESISTOR-TRMR 20K 10% WW SIDE-ADJ 20-TRN	02660	3810P-203
A20R124	0698-3260	9		RESISTOR 464K 1% .125W F TC=0+-100	28480	0698-3260
A20R125	0757-0465	6		RESISTOR 100K 1% .125W F TC=0+-100	24546	C4-1/8-T0-1003-F
A20R126	0698-3157	3		RESISTOR 19.6K 1% .125W F TC=0+-100	24546	C4-1/8-T0-1962-F
A20R127	2100-1972	3		RESISTOR-TRMR 20K 10% WW SIDE-ADJ 20-TRN	02660	3810P-203
A20R128	0698-3160	8		RESISTOR 31.6K 1% .125W F TC=0+-100	24546	C4-1/8-T0-3162-F
A20R129	0698-3156	2		RESISTOR 14.7K 1% .125W F TC=0+-100	24546	C4-1/8-T0-1472-F
A20R130	0698-3157	3		RESISTOR 19.6K 1% .125W F TC=0+-100	24546	C4-1/8-T0-1962-F
A20R131	2100-1972	3		RESISTOR-TRMR 20K 10% WW SIDE-ADJ 20-TRN	02660	3810P-203
A20R132	0698-3260	9		RESISTOR 464K 1% .125W F TC=0+-100	28480	0698-3260
A20R133	0757-0465	6		RESISTOR 100K 1% .125W F TC=0+-100	24546	C4-1/8-T0-1003-F
A20R134	0698-3157	3		RESISTOR 19.6K 1% .125W F TC=0+-100	24546	C4-1/8-T0-1962-F
A20R135	2100-1972	3		RESISTOR-TRMR 20K 10% WW SIDE-ADJ 20-TRN	02660	3810P-203
A20R136	0698-3160	8		RESISTOR 31.6K 1% .125W F TC=0+-100	24546	C4-1/8-T0-3162-F
A20R137	0698-3156	2		RESISTOR 14.7K 1% .125W F TC=0+-100	24546	C4-1/8-T0-1472-F
A20R138	0698-3157	3		RESISTOR 19.6K 1% .125W F TC=0+-100	24546	C4-1/8-T0-1962-F
A20R139	2100-1972	3		RESISTOR-TRMR 20K 10% WW SIDE-ADJ 20-TRN	02660	3810P-203
A20R140	0698-3260	9		RESISTOR 464K 1% .125W F TC=0+-100	28480	0698-3260
A20R141	0757-0465	6		RESISTOR 100K 1% .125W F TC=0+-100	24546	C4-1/8-T0-1003-F
A20R142	0698-3157	3		RESISTOR 19.6K 1% .125W F TC=0+-100	24546	C4-1/8-T0-1962-F
A20R143	2100-1972	3		RESISTOR-TRMR 20K 10% WW SIDE-ADJ 20-TRN	02660	3810P-203
A20R144	0698-3160	8		RESISTOR 31.6K 1% .125W F TC=0+-100	24546	C4-1/8-T0-3162-F
A20R145	0698-3156	2		RESISTOR 14.7K 1% .125W F TC=0+-100	24546	C4-1/8-T0-1472-F
A20R146	0698-3157	3		RESISTOR 19.6K 1% .125W F TC=0+-100	24546	C4-1/8-T0-1962-F
A20R147	2100-1972	3		RESISTOR-TRMR 20K 10% WW SIDE-ADJ 20-TRN	02660	3810P-203
A20R148	0698-3260	9		RESISTOR 464K 1% .125W F TC=0+-100	28480	0698-3260
A20R149	0757-0465	6		RESISTOR 100K 1% .125W F TC=0+-100	24546	C4-1/8-T0-1003-F
A20R150	0698-3441	8	1	RESISTOR 215 1% .125W F TC=0+-100	24546	C4-1/8-T0-215R-F
A20R151	0698-7284	5		RESISTOR 100K 1% .05W F TC=0+-100	24546	C3-1/8-T0-1003-F
A20R152	0698-7284	5		RESISTOR 100K 1% .05W F TC=0+-100	24546	C3-1/8-T0-1003-F
A20R153	0698-7284	5		RESISTOR 100K 1% .05W F TC=0+-100	24546	C3-1/8-T0-1003-F
A20TP1	1251-0600	0	5	CONNECTOR-SGL CONT PIN 1.14-MM-BSC-SZ SQ	28480	1251-0600
A20TP2	1251-0600	0		CONNECTOR-SGL CONT PIN 1.14-MM-BSC-SZ SQ	28480	1251-0600
A20TP3	1251-0600	0		CONNECTOR-SGL CONT PIN 1.14-MM-BSC-SZ SQ	28480	1251-0600
A20TP4	1251-0600	0		CONNECTOR-SGL CONT PIN 1.14-MM-BSC-SZ SQ	28480	1251-0600
A20TP5	1251-0600	0		CONNECTOR-SGL CONT PIN 1.14-MM-BSC-SZ SQ	28480	1251-0600

See introduction to this section for ordering information
*Indicates factory selected value

Table 6-3. Replaceable Parts

Reference Designation	HP Part Number	C D	Qty	Description	Mfr Code	Mfr Part Number
A20U1	1826-0092	3	11	IC OP AMP GP DUAL TO-99 PKG	28480	1826-0092
A20U2	1826-0092	3		IC OP AMP GP DUAL TO-99 PKG	28480	1826-0092
A20U3	1826-0092	3		IC OP AMP GP DUAL TO-99 PKG	28480	1826-0092
A20U4	1826-0092	3		IC OP AMP GP DUAL TO-99 PKG	28480	1826-0092
A20U5	1826-0092	3		IC OP AMP GP DUAL TO-99 PKG	28480	1826-0092
A20U6	1826-0246	9	1	IC 7805 V RGLTR TO-3	04713	MC7805CK
A20U7	1826-0092	3		IC OP AMP GP DUAL TO-99 PKG	28480	1826-0092
A20U8	1826-0092	3		IC OP AMP GP DUAL TO-99 PKG	28480	1826-0092
A20U9	1826-0092	3		IC OP AMP GP DUAL TO-99 PKG	28480	1826-0092
A20U10	1826-0092	3		IC OP AMP GP DUAL TO-99 PKG	28480	1826-0092
A20U11	1826-0092	3		IC OP AMP GP DUAL TO-99 PKG	28480	1826-0092
A20U12	1826-0092	3		IC OP AMP GP DUAL TO-99 PKG	28480	1826-0092
A20VR1	1902-0052	7	1	DIODE-ZNR 6.81V 2% DO-35 PD=.4W	28480	1902-0052
A20VR2	1902-3049	8	4	DIODE-ZNR 3.48V 2% DO-35 PD=.4W	28480	1902-3049
A20VR3	1902-3094	3	5	DIODE-ZNR 5.11V 2% DO-35 PD=.4W	28480	1902-3094
A20VR4	1902-3094	3		DIODE-ZNR 5.11V 2% DO-35 PD=.4W	28480	1902-3094
A20VR5	1902-3094	3		DIODE-ZNR 5.11V 2% DO-35 PD=.4W	28480	1902-3094
A20VR6	1902-3094	3		DIODE-ZNR 5.11V 2% DO-35 PD=.4W	28480	1902-3094
A20VR7	1902-3071	6	2	DIODE-ZNR 4.22V 2% DO-35 PD=.4W	28480	1902-3071
A20VR8	1902-3049	8		DIODE-ZNR 3.48V 2% DO-35 PD=.4W	28480	1902-3049
A20VR9	1902-3049	8		DIODE-ZNR 3.48V 2% DO-35 PD=.4W	28480	1902-3049
A20VR10	1902-3049	8		DIODE-ZNR 3.48V 2% DO-35 PD=.4W	28480	1902-3049
A20VR11	1902-0551	1	1	DIODE-ZNR 6.2V 5% PD=1W IR=10UA	28480	1902-0551
A20VR12	1902-0025	4	1	DIODE-ZNR 10V 5% DO-35 PD=.4W TC=+.06%	28480	1902-0025
A20VR13	1902-0202	9	1	DIODE-ZNR 15V 5% PD=1W IR=5UA	28480	1902-0202
A20VR13	1902-3094	3		DIODE-ZNR 5.11V 2% DO-35 PD=.4W	28480	1902-3094
A20VR14	1902-0556	6	1	DIODE-ZNR 20V 5% PD=1W IR=5UA	28480	1902-0556
A20VR15	1902-3071	6		DIODE-ZNR 4.22V 2% DO-35 PD=.4W	28480	1902-3071

See introduction to this section for ordering information
*Indicates factory selected value

Table 6-3. Replaceable Parts

Reference Designation	HP Part Number	C D	Qty	Description	Mfr Code	Mfr Part Number
A21	08565-60209	1	1	VIDEO ASSEMBLY (100HZ)	28480	08565-60209
A21C1	0180-1735	2	1	CAPACITOR-FXD .22UF+-10% 35VDC TA	56289	150D224X9035A2
A21C2	0180-2743	4	1	CAPACITOR-FXD .11UF+-10% 35VDC TA	28480	0180-2743
A21C3	0160-0163	6	1	CAPACITOR-FXD .033UF +-10% 200VDC POLYE	28480	0160-0163
A21C4	0160-2151	6	1	CAPACITOR-FXD .011UF +-5% 200VDC POLYE	28480	0160-2151
A21C5	0160-0155	6	1	CAPACITOR-FXD 3300PF +-10% 200VDC POLYE	28480	0160-0155
A21C6	0160-4822	2	1	CAPACITOR-FXD 1000PF +-5% 100VDC CER	28480	0160-4822
A21C7	0160-0134	1	1	CAPACITOR-FXD 220PF +-5% 300VDC MICA	28480	0160-0134
A21C8	0180-0291	3	1	CAPACITOR-FXD 1UF+-10% 35VDC TA	56289	150D105X9035A2
A21C9	0160-2055	9	1	CAPACITOR-FXD .01UF +80-20% 100VDC CER	28480	0160-2055
A21C10	0180-1743	2	2	CAPACITOR-FXD .1UF+-10% 35VDC TA	56289	150D104X9035A2
A21C11	0160-2254	0	2	CAPACITOR-FXD 7.5PF +-.25PF 500VDC CER	28480	0160-2254
A21C12	0180-0374	3	2	CAPACITOR-FXD 10UF+-10% 20VDC TA	56289	150D106X9020B2
A21C13	0180-0374	3		CAPACITOR-FXD 10UF+-10% 20VDC TA	56289	150D106X9020B2
A21C14	0180-0197	8	2	CAPACITOR-FXD 2.2UF+-10% 20VDC TA	56289	150D225X9020A2
A21C15	0180-0197	8		CAPACITOR-FXD 2.2UF+-10% 20VDC TA	56289	150D225X9020A2
A21C16	0160-2150	5	1	CAPACITOR-FXD 33PF +-5% 300VDC MICA	28480	0160-2150
A21C17	0160-2254	0		CAPACITOR-FXD 7.5PF +-.25PF 500VDC CER	28480	0160-2254
A21C18	0180-1743	2		CAPACITOR-FXD .1UF+-10% 35VDC TA	56289	150D104X9035A2
A21C19	0180-2141	6	1	CAPACITOR-FXD 3.3UF+-10% 50VDC TA	56289	150D335X9050B2
A21CR1	1901-0050	3	39	DIODE-SWITCHING 80V 200MA 2NS DO-35	28480	1901-0050
A21CR2	1901-0050	3		DIODE-SWITCHING 80V 200MA 2NS DO-35	28480	1901-0050
A21CR3	1901-0050	3		DIODE-SWITCHING 80V 200MA 2NS DO-35	28480	1901-0050
A21CR4	1901-0050	3		DIODE-SWITCHING 80V 200MA 2NS DO-35	28480	1901-0050
A21CR5	1901-0050	3		DIODE-SWITCHING 80V 200MA 2NS DO-35	28480	1901-0050
A21CR6	1901-0050	3		DIODE-SWITCHING 80V 200MA 2NS DO-35	28480	1901-0050
A21CR7	1901-0050	3		DIODE-SWITCHING 80V 200MA 2NS DO-35	28480	1901-0050
A21CR8	1901-0050	3		DIODE-SWITCHING 80V 200MA 2NS DO-35	28480	1901-0050
A21CR9	1901-0050	3		DIODE-SWITCHING 80V 200MA 2NS DO-35	28480	1901-0050
A21CR10	1901-0050	3		DIODE-SWITCHING 80V 200MA 2NS DO-35	28480	1901-0050
A21CR11	1901-0050	3		DIODE-SWITCHING 80V 200MA 2NS DO-35	28480	1901-0050
A21CR12	1901-0050	3		DIODE-SWITCHING 80V 200MA 2NS DO-35	28480	1901-0050
A21CR13	1901-0050	3		DIODE-SWITCHING 80V 200MA 2NS DO-35	28480	1901-0050
A21CR14	1901-0050	3		DIODE-SWITCHING 80V 200MA 2NS DO-35	28480	1901-0050
A21CR15	1901-0050	3		DIODE-SWITCHING 80V 200MA 2NS DO-35	28480	1901-0050
A21CR16	1901-0050	3		DIODE-SWITCHING 80V 200MA 2NS DO-35	28480	1901-0050
A21CR17	1901-0050	3		DIODE-SWITCHING 80V 200MA 2NS DO-35	28480	1901-0050
A21CR18	1901-0050	3		DIODE-SWITCHING 80V 200MA 2NS DO-35	28480	1901-0050
A21CR19	1901-0050	3		DIODE-SWITCHING 80V 200MA 2NS DO-35	28480	1901-0050
A21CR20	1901-0050	3		DIODE-SWITCHING 80V 200MA 2NS DO-35	28480	1901-0050
A21CR22	1901-0050	3		DIODE-SWITCHING 80V 200MA 2NS DO-35	28480	1901-0050
A21CR23	1901-0050	3		DIODE-SWITCHING 80V 200MA 2NS DO-35	28480	1901-0050
A21CR24	1901-0050	3		DIODE-SWITCHING 80V 200MA 2NS DO-35	28480	1901-0050
A21CR25	1901-0050	3		DIODE-SWITCHING 80V 200MA 2NS DO-35	28480	1901-0050
A21CR26	1901-0050	3		DIODE-SWITCHING 80V 200MA 2NS DO-35	28480	1901-0050
A21CR27	1901-0050	3		DIODE-SWITCHING 80V 200MA 2NS DO-35	28480	1901-0050
A21CR29	1901-0050	3		DIODE-SWITCHING 80V 200MA 2NS DO-35	28480	1901-0050
A21CR30	1901-0050	3		DIODE-SWITCHING 80V 200MA 2NS DO-35	28480	1901-0050
A21CR31	1901-0050	3		DIODE-SWITCHING 80V 200MA 2NS DO-35	28480	1901-0050
A21CR32	1901-0050	3		DIODE-SWITCHING 80V 200MA 2NS DO-35	28480	1901-0050
A21CR33	1901-0050	3		DIODE-SWITCHING 80V 200MA 2NS DO-35	28480	1901-0050
A21CR34	1901-0179	7	2	DIODE-SWITCHING 15V 50MA 750PS DO-7	28480	1901-0179
A21CR35	1901-0179	7		DIODE-SWITCHING 15V 50MA 750PS DO-7	28480	1901-0179
A21CR36	1901-0050	3		DIODE-SWITCHING 80V 200MA 2NS DO-35	28480	1901-0050
A21CR37	1901-0050	3		DIODE-SWITCHING 80V 200MA 2NS DO-35	28480	1901-0050
A21CR38	1901-0050	3		DIODE-SWITCHING 80V 200MA 2NS DO-35	28480	1901-0050
A21CR39	1901-0050	3		DIODE-SWITCHING 80V 200MA 2NS DO-35	28480	1901-0050
A21CR40	1901-0050	3		DIODE-SWITCHING 80V 200MA 2NS DO-35	28480	1901-0050
A21CR41	1901-0050	3		DIODE-SWITCHING 80V 200MA 2NS DO-35	28480	1901-0050
A21CR42	1901-0050	3		DIODE-SWITCHING 80V 200MA 2NS DO-35	28480	1901-0050
A21CR43	1901-0050	3		DIODE-SWITCHING 80V 200MA 2NS DO-35	28480	1901-0050
A21E1	9170-0029	3	5	CORE-SHIELDING BEAD	28480	9170-0029
A21E2	9170-0029	3		CORE-SHIELDING BEAD	28480	9170-0029
A21E3	9170-0029	3		CORE-SHIELDING BEAD	28480	9170-0029
A21E4	9170-0029	3		CORE-SHIELDING BEAD	28480	9170-0029
A21E5	9170-0029	3		CORE-SHIELDING BEAD	28480	9170-0029
A21L1	9140-0210	1	2	INDUCTOR RF-CH-MLD 100UH 5% .166DX.385LG	28480	9140-0210
A21L2	9140-0210	1		INDUCTOR RF-CH-MLD 100UH 5% .166DX.385LG	28480	9140-0210
A21L3	9140-0114	4	1	INDUCTOR RF-CH-MLD 10UH 10% .166DX.385LG	28480	9140-0114
A21MP1	1480-0073	6	2	PIN-ROLL .062-IN-DIA .25-IN-LG BE-CU	28480	1480-0073
A21MP2	4040-0749	4	1	EXTRACTOR-PC BOARD (BROWN)	28480	4040-0749
A21MP3	4040-0750	7	1	EXTRACTOR-PC BOARD (RED)	28480	4040-0750

See introduction to this section for ordering information
*Indicates factory selected value

Table 6-3. Replaceable Parts

Reference Designation	HP Part Number	C D	Qty	Description	Mfr Code	Mfr Part Number
A21Q1	1855-0020	8	8	TRANSISTOR J-FET N-CHAN D-MODE TO-18 SI	28480	1855-0020
A21Q3	1853-0404	8	37	TRANSISTOR PNP SI PD=500MW FT=1.6GHZ	01295	A5T4260
A21Q4	1853-0404	8		TRANSISTOR PNP SI PD=500MW FT=1.6GHZ	01295	A5T4260
A21Q5	1853-0404	8		TRANSISTOR PNP SI PD=500MW FT=1.6GHZ	01295	A5T4260
A21Q6	1853-0404	8		TRANSISTOR PNP SI PD=500MW FT=1.6GHZ	01295	A5T4260
A21Q7	1853-0404	8		TRANSISTOR PNP SI PD=500MW FT=1.6GHZ	01295	A5T4260
A21Q8	1853-0404	8		TRANSISTOR PNP SI PD=500MW FT=1.6GHZ	01295	A5T4260
A21Q9	1853-0404	8		TRANSISTOR PNP SI PD=500MW FT=1.6GHZ	01295	A5T4260
A21Q10	1853-0404	8		TRANSISTOR PNP SI PD=500MW FT=1.6GHZ	01295	A5T4260
A21Q11	1853-0404	8		TRANSISTOR PNP SI PD=500MW FT=1.6GHZ	01295	A5T4260
A21Q12	1855-0020	8		TRANSISTOR J-FET N-CHAN D-MODE TO-18 SI	28480	1855-0020
A21Q13	1853-0404	8		TRANSISTOR PNP SI PD=500MW FT=1.6GHZ	01295	A5T4260
A21Q14	1853-0404	8		TRANSISTOR PNP SI PD=500MW FT=1.6GHZ	01295	A5T4260
A21Q15	1853-0281	9	2	TRANSISTOR PNP 2N2907A SI TO-18 PD=400MW	04713	2N2907A
A21Q16	1853-0404	8		TRANSISTOR PNP SI PD=500MW FT=1.6GHZ	01295	A5T4260
A21Q17	1855-0020	8		TRANSISTOR J-FET N-CHAN D-MODE TO-18 SI	28480	1855-0020
A21Q18	1853-0404	8		TRANSISTOR PNP SI PD=500MW FT=1.6GHZ	01295	A5T4260
A21Q19	1853-0404	8		TRANSISTOR PNP SI PD=500MW FT=1.6GHZ	01295	A5T4260
A21Q20	1853-0404	8		TRANSISTOR PNP SI PD=500MW FT=1.6GHZ	01295	A5T4260
A21Q21	1853-0404	8		TRANSISTOR PNP SI PD=500MW FT=1.6GHZ	01295	A5T4260
A21Q22	1853-0404	8		TRANSISTOR PNP SI PD=500MW FT=1.6GHZ	01295	A5T4260
A21Q23	1855-0020	8		TRANSISTOR J-FET N-CHAN D-MODE TO-18 SI	28480	1855-0020
A21Q24	1853-0404	8		TRANSISTOR PNP SI PD=500MW FT=1.6GHZ	01295	A5T4260
A21Q25	1853-0404	8		TRANSISTOR PNP SI PD=500MW FT=1.6GHZ	01295	A5T4260
A21Q26	1853-0404	8		TRANSISTOR PNP SI PD=500MW FT=1.6GHZ	01295	A5T4260
A21Q27	1853-0404	8		TRANSISTOR PNP SI PD=500MW FT=1.6GHZ	01295	A5T4260
A21Q28	1853-0404	8		TRANSISTOR PNP SI PD=500MW FT=1.6GHZ	01295	A5T4260
A21Q29	1853-0404	8		TRANSISTOR PNP SI PD=500MW FT=1.6GHZ	01295	A5T4260
A21Q30	1855-0020	8		TRANSISTOR J-FET N-CHAN D-MODE TO-18 SI	28480	1855-0020
A21Q31	1853-0404	8		TRANSISTOR PNP SI PD=500MW FT=1.6GHZ	01295	A5T4260
A21Q32	1853-0404	8		TRANSISTOR PNP SI PD=500MW FT=1.6GHZ	01295	A5T4260
A21Q33	1853-0404	8		TRANSISTOR PNP SI PD=500MW FT=1.6GHZ	01295	A5T4260
A21Q34	1853-0404	8		TRANSISTOR PNP SI PD=500MW FT=1.6GHZ	01295	A5T4260
A21Q35	1853-0404	8		TRANSISTOR PNP SI PD=500MW FT=1.6GHZ	01295	A5T4260
A21Q36	1853-0404	8		TRANSISTOR PNP SI PD=500MW FT=1.6GHZ	01295	A5T4260
A21Q37	1855-0020	8		TRANSISTOR J-FET N-CHAN D-MODE TO-18 SI	28480	1855-0020
A21Q38	1853-0404	8		TRANSISTOR PNP SI PD=500MW FT=1.6GHZ	01295	A5T4260
A21Q39	1853-0404	8		TRANSISTOR PNP SI PD=500MW FT=1.6GHZ	01295	A5T4260
A21Q43	1855-0050	4	2	TRANSISTOR-JFET DUAL N-CHAN D-MODE SI	28480	1855-0050
A21Q44	1853-0007	7	6	TRANSISTOR PNP 2N3251 SI TO-18 PD=360MW	04713	2N3251
A21Q45	1853-0007	7		TRANSISTOR PNP 2N3251 SI TO-18 PD=360MW	04713	2N3251
A21Q46	1853-0007	7		TRANSISTOR PNP 2N3251 SI TO-18 PD=360MW	04713	2N3251
A21Q47	1853-0404	8		TRANSISTOR PNP SI PD=500MW FT=1.6GHZ	01295	A5T4260
A21Q48	1853-0404	8		TRANSISTOR PNP SI PD=500MW FT=1.6GHZ	01295	A5T4260
A21Q49	1853-0404	8		TRANSISTOR PNP SI PD=500MW FT=1.6GHZ	01295	A5T4260
A21Q50	1855-0050	4		TRANSISTOR-JFET DUAL N-CHAN D-MODE SI	28480	1855-0050
A21Q51	1853-0007	7		TRANSISTOR PNP 2N3251 SI TO-18 PD=360MW	04713	2N3251
A21Q52	1853-0007	7		TRANSISTOR PNP 2N3251 SI TO-18 PD=360MW	04713	2N3251
A21Q53	1853-0007	7		TRANSISTOR PNP 2N3251 SI TO-18 PD=360MW	04713	2N3251
A21Q54	1853-0404	8		TRANSISTOR PNP SI PD=500MW FT=1.6GHZ	01295	A5T4260
A21Q55	1853-0404	8		TRANSISTOR PNP SI PD=500MW FT=1.6GHZ	01295	A5T4260
A21Q56	1853-0404	8		TRANSISTOR PNP SI PD=500MW FT=1.6GHZ	01295	A5T4260
A21Q57	1853-0281	9		TRANSISTOR PNP 2N2907A SI TO-18 PD=400MW	04713	2N2907A
A21Q58	1855-0020	8		TRANSISTOR J-FET N-CHAN D-MODE TO-18 SI	28480	1855-0020
A21Q59	1855-0020	8		TRANSISTOR J-FET N-CHAN D-MODE TO-18 SI	28480	1855-0020
A21R1	0757-0199	3	43	RESISTOR 21.5K 1% .125W F TC=0+-100	24546	C4-1/8-T0-2152-F
A21R2	0757-0199	3		RESISTOR 21.5K 1% .125W F TC=0+-100	24546	C4-1/8-T0-2152-F
A21R3	0757-0199	3		RESISTOR 21.5K 1% .125W F TC=0+-100	24546	C4-1/8-T0-2152-F
A21R4	0757-0465	6	9	RESISTOR 100K 1% .125W F TC=0+-100	24546	C4-1/8-T0-1003-F
A21R5	0757-0459	7	1	RESISTOR 51.1K 1% .125W F TC=0+-100	24546	C4-1/8-T0-5112-F
A21R6	0757-0199	3		RESISTOR 21.5K 1% .125W F TC=0+-100	24546	C4-1/8-T0-2152-F
A21R7	0757-0199	3		RESISTOR 21.5K 1% .125W F TC=0+-100	24546	C4-1/8-T0-2152-F
A21R8	0757-0199	3		RESISTOR 21.5K 1% .125W F TC=0+-100	24546	C4-1/8-T0-2152-F
A21R9	0757-0465	6		RESISTOR 100K 1% .125W F TC=0+-100	24546	C4-1/8-T0-1003-F
A21R10	0757-0438	3	2	RESISTOR 5.11K 1% .125W F TC=0+-100	24546	C4-1/8-T0-5111-F
A21R11	0757-1094	9	1	RESISTOR 1.47K 1% .125W F TC=0+-100	24546	C4-1/8-T0-1471-F
A21R12	0757-0199	3		RESISTOR 21.5K 1% .125W F TC=0+-100	24546	C4-1/8-T0-2152-F
A21R13	0757-0199	3		RESISTOR 21.5K 1% .125W F TC=0+-100	24546	C4-1/8-T0-2152-F
A21R14	0757-0199	3		RESISTOR 21.5K 1% .125W F TC=0+-100	24546	C4-1/8-T0-2152-F
A21R15	0757-0465	6		RESISTOR 100K 1% .125W F TC=0+-100	24546	C4-1/8-T0-1003-F
A21R16	0757-0274	5	1	RESISTOR 1.21K 1% .125W F TC=0+-100	24546	C4-1/8-T0-1211-F
A21R17	0698-3155	1	1	RESISTOR 4.64K 1% .125W F TC=0+-100	24546	C4-1/8-T0-4641-F
A21R18	0757-0199	3		RESISTOR 21.5K 1% .125W F TC=0+-100	24546	C4-1/8-T0-2152-F
A21R19	0757-0199	3		RESISTOR 21.5K 1% .125W F TC=0+-100	24546	C4-1/8-T0-2152-F
A21R20	0757-0199	3		RESISTOR 21.5K 1% .125W F TC=0+-100	24546	C4-1/8-T0-2152-F

See introduction to this section for ordering information
*Indicates factory selected value

Table 6-3. Replaceable Parts

Reference Designation	HP Part Number	C D	Qty	Description	Mfr Code	Mfr Part Number
A21R21	0757-0465	6		RESISTOR 100K 1% .125W F TC=0+-100	24546	C4-1/8-T0-1003-F
A21R22	0698-3154	0	1	RESISTOR 4.22K 1% .125W F TC=0+-100	24546	C4-1/8-T0-4221-F
A21R23	0757-0447	4	1	RESISTOR 16.2K 1% .125W F TC=0+-100	24546	C4-1/8-T0-1622-F
A21R24	0757-0199	3		RESISTOR 21.5K 1% .125W F TC=0+-100	24546	C4-1/8-T0-2152-F
A21R25	0757-0199	3		RESISTOR 21.5K 1% .125W F TC=0+-100	24546	C4-1/8-T0-2152-F
A21R26	0757-0199	3		RESISTOR 21.5K 1% .125W F TC=0+-100	24546	C4-1/8-T0-2152-F
A21R27	0757-0465	6		RESISTOR 100K 1% .125W F TC=0+-100	24546	C4-1/8-T0-1003-F
A21R28	0757-0442	9	9	RESISTOR 10K 1% .125W F TC=0+-100	24546	C4-1/8-T0-1002-F
A21R29	0698-3162	0	1	RESISTOR 46.4K 1% .125W F TC=0+-100	24546	C4-1/8-T0-4642-F
A21R30	0757-0199	3		RESISTOR 21.5K 1% .125W F TC=0+-100	24546	C4-1/8-T0-2152-F
A21R31	0757-0199	3		RESISTOR 21.5K 1% .125W F TC=0+-100	24546	C4-1/8-T0-2152-F
A21R32	0757-0199	3		RESISTOR 21.5K 1% .125W F TC=0+-100	24546	C4-1/8-T0-2152-F
A21R33	0757-0465	6		RESISTOR 100K 1% .125W F TC=0+-100	24546	C4-1/8-T0-1003-F
A21R34	0698-3158	4	1	RESISTOR 23.7K 1% .125W F TC=0+-100	24546	C4-1/8-T0-2372-F
A21R35	0757-0470	3	1	RESISTOR 162K 1% .125W F TC=0+-100	24546	C4-1/8-T0-1623-F
A21R36	0757-0199	3		RESISTOR 21.5K 1% .125W F TC=0+-100	24546	C4-1/8-T0-2152-F
A21R38	0698-3194	8	3	RESISTOR 20K .25% .125W F TC=0+-50	03888	PME55-1/8-T2-2002-C
A21R39	0757-0465	6		RESISTOR 100K 1% .125W F TC=0+-100	24546	C4-1/8-T0-1003-F
A21R40	0698-3453	2	1	RESISTOR 196K 1% .125W F TC=0+-100	24546	C4-1/8-T0-1963-F
A21R41	0757-0422	5	2	RESISTOR 909 1% .125W F TC=0+-100	24546	C4-1/8-T0-909R-F
A21R42	0698-0085	0	3	RESISTOR 2.61K 1% .125W F TC=0+-100	24546	C4-1/8-T0-2611-F
A21R43	0757-0422	5		RESISTOR 909 1% .125W F TC=0+-100	24546	C4-1/8-T0-909R-F
A21R44	0757-0279	0	2	RESISTOR 3.16K 1% .125W F TC=0+-100	24546	C4-1/8-T0-3161-F
A21R45	0757-0438	3		RESISTOR 5.11K 1% .125W F TC=0+-100	24546	C4-1/8-T0-5111-F
A21R46	0757-0199	3		RESISTOR 21.5K 1% .125W F TC=0+-100	24546	C4-1/8-T0-2152-F
A21R47	0757-0280	3	3	RESISTOR 1K 1% .125W F TC=0+-100	24546	C4-1/8-T0-1001-F
A21R48	0757-0444	1	2	RESISTOR 12.1K 1% .125W F TC=0+-100	24546	C4-1/8-T0-1212-F
A21R49	0698-0085	0		RESISTOR 2.61K 1% .125W F TC=0+-100	24546	C4-1/8-T0-2611-F
A21R50	0757-0199	3		RESISTOR 21.5K 1% .125W F TC=0+-100	24546	C4-1/8-T0-2152-F
A21R51	0757-0199	3		RESISTOR 21.5K 1% .125W F TC=0+-100	24546	C4-1/8-T0-2152-F
A21R53	0757-0199	3		RESISTOR 21.5K 1% .125W F TC=0+-100	24546	C4-1/8-T0-2152-F
A21R54	0757-0199	3		RESISTOR 21.5K 1% .125W F TC=0+-100	24546	C4-1/8-T0-2152-F
A21R55	2100-3054	6	2	RESISTOR-TRMR 50K 10% C SIDE-ADJ 17-TRN	02111	43P503
A21R57	0757-0199	3		RESISTOR 21.5K 1% .125W F TC=0+-100	24546	C4-1/8-T0-2152-F
A21R58	2100-3094	4	2	RESISTOR-TRMR 100K 10% C SIDE-ADJ 17-TRN	02111	43P104
A21R59	0757-0199	3		RESISTOR 21.5K 1% .125W F TC=0+-100	24546	C4-1/8-T0-2152-F
A21R60	0757-0199	3		RESISTOR 21.5K 1% .125W F TC=0+-100	24546	C4-1/8-T0-2152-F
A21R61	0757-0199	3		RESISTOR 21.5K 1% .125W F TC=0+-100	24546	C4-1/8-T0-2152-F
A21R62	0757-0199	3		RESISTOR 21.5K 1% .125W F TC=0+-100	24546	C4-1/8-T0-2152-F
A21R63	0757-0199	3		RESISTOR 21.5K 1% .125W F TC=0+-100	24546	C4-1/8-T0-2152-F
A21R64	0698-0085	0		RESISTOR 2.61K 1% .125W F TC=0+-100	24546	C4-1/8-T0-2611-F
A21R65	0757-0199	3		RESISTOR 21.5K 1% .125W F TC=0+-100	24546	C4-1/8-T0-2152-F
A21R66	0757-0199	3		RESISTOR 21.5K 1% .125W F TC=0+-100	24546	C4-1/8-T0-2152-F
A21R67	0698-7794	2	1	RESISTOR 10K .25% .125W F TC=0+-100	19701	MF4C1/8-T0-1002-C
A21R68	0757-0442	9		RESISTOR 10K 1% .125W F TC=0+-100	24546	C4-1/8-T0-1002-F
A21R69	0757-0278	9	1	RESISTOR 1.78K 1% .125W F TC=0+-100	24546	C4-1/8-T0-1781-F
A21R71	2100-3094	4		RESISTOR-TRMR 100K 10% C SIDE-ADJ 17-TRN	02111	43P104
A21R72	0698-7553	1	1	RESISTOR 33.6K .5% .125W F TC=0+-50	19701	MF4C1/8-T2-3362-D
A21R73	0757-0199	3		RESISTOR 21.5K 1% .125W F TC=0+-100	24546	C4-1/8-T0-2152-F
A21R74	2100-3054	6		RESISTOR-TRMR 50K 10% C SIDE-ADJ 17-TRN	02111	43P503
A21R75	0698-6109	1	1	RESISTOR 18.2K .25% .125W F TC=0+-100	28480	0698-6109
A21R76	0757-0199	3		RESISTOR 21.5K 1% .125W F TC=0+-100	24546	C4-1/8-T0-2152-F
A21R77	2100-2850	8	1	RESISTOR-TRMR 10K 10% WW SIDE-ADJ 20-TRN	02660	3810P-103
A21R78	0698-6533	5	1	RESISTOR 12.5K .1% .125W F TC=0+-25	28480	0698-6533
A21R79	0757-0199	3		RESISTOR 21.5K 1% .125W F TC=0+-100	24546	C4-1/8-T0-2152-F
A21R80	0757-0199	3		RESISTOR 21.5K 1% .125W F TC=0+-100	24546	C4-1/8-T0-2152-F
A21R81	0757-0442	9		RESISTOR 10K 1% .125W F TC=0+-100	24546	C4-1/8-T0-1002-F
A21R82	0757-0280	3		RESISTOR 1K 1% .125W F TC=0+-100	24546	C4-1/8-T0-1001-F
A21R83	0757-0442	9		RESISTOR 10K 1% .125W F TC=0+-100	24546	C4-1/8-T0-1002-F
A21R84	0698-3447	4	3	RESISTOR 422 1% .125W F TC=0+-100	24546	C4-1/8-T0-422R-F
A21R85	0757-0442	9		RESISTOR 10K 1% .125W F TC=0+-100	24546	C4-1/8-T0-1002-F
A21R86	0698-0084	9	1	RESISTOR 2.15K 1% .125W F TC=0+-100	24546	C4-1/8-T0-2151-F
A21R87	0698-3447	4		RESISTOR 422 1% .125W F TC=0+-100	24546	C4-1/8-T0-422R-F
A21R88	0757-0444	1		RESISTOR 12.1K 1% .125W F TC=0+-100	24546	C4-1/8-T0-1212-F
A21R89	0698-0083	8	2	RESISTOR 1.96K 1% .125W F TC=0+-100	24546	C4-1/8-T0-1961-F
A21R90	0698-0083	8		RESISTOR 1.96K 1% .125W F TC=0+-100	24546	C4-1/8-T0-1961-F
A21R91	0698-3156	2	1	RESISTOR 14.7K 1% .125W F TC=0+-100	24546	C4-1/8-T0-1472-F
A21R92	2100-2851	9	2	RESISTOR-TRMR 2K 10% WW SIDE-ADJ 20-TRN	02660	3810P-202
A21R93	0698-4055	2	1	RESISTOR 1K .25% .125W F TC=0+-100	03888	PME55-1/8-T0-1001-C
A21R94	0757-0199	3		RESISTOR 21.5K 1% .125W F TC=0+-100	24546	C4-1/8-T0-2152-F
A21R95	0698-8860	5	1	RESISTOR 7.52K .25% .125W F TC=0+-100	28480	0698-8860
A21R96	0698-8869	4	1	RESISTOR 2.15K .25% .125W F TC=0+-100	28480	0698-8869
A21R98	0757-0199	3		RESISTOR 21.5K 1% .125W F TC=0+-100	24546	C4-1/8-T0-2152-F
A21R99	0698-8873	0	1	RESISTOR 232 .25% .125W F TC=0+-100	28480	0698-8873
A21R100	0757-0199	3		RESISTOR 21.5K 1% .125W F TC=0+-100	24546	C4-1/8-T0-2152-F

See introduction to this section for ordering information
*Indicates factory selected value

Table 6-3. Replaceable Parts

Reference Designation	HP Part Number	C D	Qty	Description	Mfr Code	Mfr Part Number
A21R102	0698-8872	9	1	RESISTOR 532 .25% .125W F TC=0+-100	28480	0698-8872
A21R103	0757-0199	3		RESISTOR 21.5K 1% .125W F TC=0+-100	24546	C4-1/8-T0-2152-F
A21R104	0757-0199	3		RESISTOR 21.5K 1% .125W F TC=0+-100	24546	C4-1/8-T0-2152-F
A21R105	0698-8870	7	1	RESISTOR 2.143K .25% .125W F TC=0+-100	28480	0698-8870
A21R106	0757-0442	9		RESISTOR 10K 1% .125W F TC=0+-100	24546	C4-1/8-T0-1002-F
A21R107	0757-0442	9		RESISTOR 10K 1% .125W F TC=0+-100	24546	C4-1/8-T0-1002-F
A21R108	0698-3447	4		RESISTOR 422 1% .125W F TC=0+-100	24546	C4-1/8-T0-422R-F
A21R109	0757-0442	9		RESISTOR 10K 1% .125W F TC=0+-100	24546	C4-1/8-T0-1002-F
A21R110	0757-0817	2	1	RESISTOR 750 1% .5W F TC=0+-100	28480	0757-0817
A21R111	0757-0279	0		RESISTOR 3.16K 1% .125W F TC=0+-100	24546	C4-1/8-T0-3161-F
A21R112	0757-0442	9		RESISTOR 10K 1% .125W F TC=0+-100	24546	C4-1/8-T0-1002-F
A21R113	0757-0440	7	1	RESISTOR 7.5K 1% .125W F TC=0+-100	24546	C4-1/8-T0-7501-F
A21R114	0698-3136	8	1	RESISTOR 17.8K 1% .125W F TC=0+-100	24546	C4-1/8-T0-1782-F
A21R115	0698-4482	9	1	RESISTOR 17.4K 1% .125W F TC=0+-100	03888	PME55-1/8-T0-1742-F
A21R116	0757-0416	7	1	RESISTOR 511 1% .125W F TC=0+-100	24546	C4-1/8-T0-511R-F
A21R117	0757-0280	3		RESISTOR 1K 1% .125W F TC=0+-100	24546	C4-1/8-T0-1001-F
A21R118	0698-3440	7	3	RESISTOR 196 1% .125W F TC=0+-100	24546	C4-1/8-T0-196R-F
A21R119	0757-0394	0	1	RESISTOR 51.1 1% .125W F TC=0+-100	24546	C4-1/8-T0-51R1-F
A21R120	0698-3440	7		RESISTOR 196 1% .125W F TC=0+-100	24546	C4-1/8-T0-196R-F
A21R121	0698-3440	7		RESISTOR 196 1% .125W F TC=0+-100	24546	C4-1/8-T0-196R-F
A21R122	0757-0199	3		RESISTOR 21.5K 1% .125W F TC=0+-100	24546	C4-1/8-T0-2152-F
A21R123	0698-3260	9	2	RESISTOR 464K 1% .125W F TC=0+-100	28480	0698-3260
A21R124	0698-3260	9		RESISTOR 464K 1% .125W F TC=0+-100	28480	0698-3260
A21R125	0698-3194	8		RESISTOR 20K .25% .125W F TC=0+-50	03888	PME55-1/8-T2-2002-C
A21R126	0698-7421	2	1	RESISTOR 40K .25% .125W F TC=0+-100	19701	MF4C1/8-T0-4002-C
A21R127	0698-3194	8		RESISTOR 20K .25% .125W F TC=0+-50	03888	PME55-1/8-T2-2002-C
A21R128	0757-0465	6		RESISTOR 100K 1% .125W F TC=0+-100	24546	C4-1/8-T0-1003-F
A21R129	0757-0465	6		RESISTOR 100K 1% .125W F TC=0+-100	24546	C4-1/8-T0-1003-F
A21R130	0698-5813	2	1	RESISTOR 220K 1% .125W F TC=0+-100	24546	C4-1/8-T0-2203-F
A21R131	0757-0199	3		RESISTOR 21.5K 1% .125W F TC=0+-100	24546	C4-1/8-T0-2152-F
A21R132	2100-2851	9		RESISTOR-TRMR 2K 10% WW SIDE-ADJ 20-TRN	02660	3810P-202
A21S1	3101-1274	1	1	SWITCH-SL SPDT SUBMIN 2A 120VAC PC	28480	3101-1274
A21TP1	1251-0600	0	7	CONNECTOR-SGL CONT PIN 1.14-MM-BSC-SZ SQ	28480	1251-0600
A21TP2	1251-0600	0		CONNECTOR-SGL CONT PIN 1.14-MM-BSC-SZ SQ	28480	1251-0600
A21TP3	1251-0600	0		CONNECTOR-SGL CONT PIN 1.14-MM-BSC-SZ SQ	28480	1251-0600
A21TP4	1251-0600	0		CONNECTOR-SGL CONT PIN 1.14-MM-BSC-SZ SQ	28480	1251-0600
A21TP5	1251-0600	0		CONNECTOR-SGL CONT PIN 1.14-MM-BSC-SZ SQ	28480	1251-0600
A21TP6	0360-0077	5	1	TERMINAL-STUD SGL-TUR SWGFRM-MTG	28480	0360-0077
A21TP7	1251-0600	0		CONNECTOR-SGL CONT PIN 1.14-MM-BSC-SZ SQ	28480	1251-0600
A21TP8	1251-0600	0		CONNECTOR-SGL CONT PIN 1.14-MM-BSC-SZ SQ	28480	1251-0600
A21U1	1826-0092	3	1	IC OP AMP GP DUAL TO-99 PKG	28480	1826-0092
A21VR1	1902-0025	4	1	DIODE-ZNR 10V 5% DO-35 PD=.4W TC=+.06%	28480	1902-0025
A21VR2	1902-0064	1	1	DIODE-ZNR 7.5V 5% DO-35 PD=.4W TC=+.05%	28480	1902-0064
A21VR3	1902-3171	7	1	DIODE-ZNR 11V 5% DO-35 PD=.4W TC=+.062%	28480	1902-3171
A21VR4	1902-3182	0	1	DIODE-ZNR 12.1V 5% DO-35 PD=.4W	28480	1902-3182

See introduction to this section for ordering information
*Indicates factory selected value

Table 6-3. Replaceable Parts

Reference Designation	HP Part Number	C D	Qty	Description	Mfr Code	Mfr Part Number
A21	08565-60208	0	1	VIDEO ASSEMBLY (OPTION 002)	28480	08565-60208
A21C1	0180-2205	3	1	CAPACITOR-FXD .33UF+-10% 35VDC TA	56289	150D334X9035A2
A21C2	0180-2743	4	1	CAPACITOR-FXD .11UF+-10% 35VDC TA	28480	0180-2743
A21C3	0160-0163	6	1	CAPACITOR-FXD .033UF +-10% 200VDC POLYE	28480	0160-0163
A21C4	0160-2151	6	1	CAPACITOR-FXD .011UF +-5% 200VDC POLYE	28480	0160-2151
A21C5	0160-0155	6	1	CAPACITOR-FXD 3300PF +-10% 200VDC POLYE	28480	0160-0155
A21C6	0160-4822	2	1	CAPACITOR-FXD 1000PF +-5% 100VDC CER	28480	0160-4822
A21C7	0160-0134	1	1	CAPACITOR-FXD 220PF +-5% 300VDC MICA	28480	0160-0134
A21C8	0180-0291	3	1	CAPACITOR-FXD 1UF+-10% 35VDC TA	56289	150D105X9035A2
A21C9	0160-2055	9	1	CAPACITOR-FXD .01UF +80-20% 100VDC CER	28480	0160-2055
A21C10	0180-1743	2	1	CAPACITOR-FXD .1UF+-10% 35VDC TA	56289	150D104X9035A2
A21C11	0160-2254	0	2	CAPACITOR-FXD 7.5PF +-.25PF 500VDC CER	28480	0160-2254
A21C12	0180-0374	3	2	CAPACITOR-FXD 10UF+-10% 20VDC TA	56289	150D106X9020B2
A21C13	0180-0374	3		CAPACITOR-FXD 10UF+-10% 20VDC TA	56289	150D106X9020B2
A21C14	0180-0197	8	2	CAPACITOR-FXD 2.2UF+-10% 20VDC TA	56289	150D225X9020A2
A21C15	0180-0197	8		CAPACITOR-FXD 2.2UF+-10% 20VDC TA	56289	150D225X9020A2
A21C16	0160-2150	5	1	CAPACITOR-FXD 33PF +-5% 300VDC MICA	28480	0160-2150
A21C17	0160-2254	0		CAPACITOR-FXD 7.5PF +-.25PF 500VDC CER	28480	0160-2254
A21CR1	1901-0050	3	33	DIODE-SWITCHING 80V 200MA 2NS DO-35	28480	1901-0050
A21CR2	1901-0050	3		DIODE-SWITCHING 80V 200MA 2NS DO-35	28480	1901-0050
A21CR3	1901-0050	3		DIODE-SWITCHING 80V 200MA 2NS DO-35	28480	1901-0050
A21CR4	1901-0050	3		DIODE-SWITCHING 80V 200MA 2NS DO-35	28480	1901-0050
A21CR5	1901-0050	3		DIODE-SWITCHING 80V 200MA 2NS DO-35	28480	1901-0050
A21CR6	1901-0050	3		DIODE-SWITCHING 80V 200MA 2NS DO-35	28480	1901-0050
A21CR7	1901-0050	3		DIODE-SWITCHING 80V 200MA 2NS DO-35	28480	1901-0050
A21CR8	1901-0050	3		DIODE-SWITCHING 80V 200MA 2NS DO-35	28480	1901-0050
A21CR9	1901-0050	3		DIODE-SWITCHING 80V 200MA 2NS DO-35	28480	1901-0050
A21CR10	1901-0050	3		DIODE-SWITCHING 80V 200MA 2NS DO-35	28480	1901-0050
A21CR11	1901-0050	3		DIODE-SWITCHING 80V 200MA 2NS DO-35	28480	1901-0050
A21CR12	1901-0050	3		DIODE-SWITCHING 80V 200MA 2NS DO-35	28480	1901-0050
A21CR13	1901-0050	3		DIODE-SWITCHING 80V 200MA 2NS DO-35	28480	1901-0050
A21CR14	1901-0050	3		DIODE-SWITCHING 80V 200MA 2NS DO-35	28480	1901-0050
A21CR15	1901-0050	3		DIODE-SWITCHING 80V 200MA 2NS DO-35	28480	1901-0050
A21CR16	1901-0050	3		DIODE-SWITCHING 80V 200MA 2NS DO-35	28480	1901-0050
A21CR17	1901-0050	3		DIODE-SWITCHING 80V 200MA 2NS DO-35	28480	1901-0050
A21CR18	1901-0050	3		DIODE-SWITCHING 80V 200MA 2NS DO-35	28480	1901-0050
A21CR19	1901-0050	3		DIODE-SWITCHING 80V 200MA 2NS DO-35	28480	1901-0050
A21CR20	1901-0050	3		DIODE-SWITCHING 80V 200MA 2NS DO-35	28480	1901-0050
A21CR22	1901-0050	3		DIODE-SWITCHING 80V 200MA 2NS DO-35	28480	1901-0050
A21CR23	1901-0050	3		DIODE-SWITCHING 80V 200MA 2NS DO-35	28480	1901-0050
A21CR24	1901-0050	3		DIODE-SWITCHING 80V 200MA 2NS DO-35	28480	1901-0050
A21CR25	1901-0050	3		DIODE-SWITCHING 80V 200MA 2NS DO-35	28480	1901-0050
A21CR29	1901-0050	3		DIODE-SWITCHING 80V 200MA 2NS DO-35	28480	1901-0050
A21CR30	1901-0050	3		DIODE-SWITCHING 80V 200MA 2NS DO-35	28480	1901-0050
A21CR31	1901-0050	3		DIODE-SWITCHING 80V 200MA 2NS DO-35	28480	1901-0050
A21CR32	1901-0050	3		DIODE-SWITCHING 80V 200MA 2NS DO-35	28480	1901-0050
A21CR33	1901-0050	3		DIODE-SWITCHING 80V 200MA 2NS DO-35	28480	1901-0050
A21CR34	1901-0179	7	2	DIODE-SWITCHING 15V 50MA 750PS DO-7	28480	1901-0179
A21CR35	1901-0179	7		DIODE-SWITCHING 15V 50MA 750PS DO-7	28480	1901-0179
A21CR36	1901-0050	3		DIODE-SWITCHING 80V 200MA 2NS DO-35	28480	1901-0050
A21CR41	1901-0050	3		DIODE-SWITCHING 80V 200MA 2NS DO-35	28480	1901-0050
A21CR42	1901-0050	3		DIODE-SWITCHING 80V 200MA 2NS DO-35	28480	1901-0050
A21CR43	1901-0050	3		DIODE-SWITCHING 80V 200MA 2NS DO-35	28480	1901-0050
A21E1	9170-0029	3	5	CORE-SHIELDING BEAD	28480	9170-0029
A21E2	9170-0029	3		CORE-SHIELDING BEAD	28480	9170-0029
A21E3	9170-0029	3		CORE-SHIELDING BEAD	28480	9170-0029
A21E4	9170-0029	3		CORE-SHIELDING BEAD	28480	9170-0029
A21E5	9170-0029	3		CORE-SHIELDING BEAD	28480	9170-0029
A21L1	9140-0210	1	2	INDUCTOR RF-CH-MLD 100UH 5% .166DX.385LG	28480	9140-0210
A21L2	9140-0210	1		INDUCTOR RF-CH-MLD 100UH 5% .166DX.385LG	28480	9140-0210
A21L3	9140-0114	4	1	INDUCTOR RF-CH-MLD 10UH 10% .166DX.385LG	28480	9140-0114
A21MP2	4040-0749	4	1	EXTRACTOR-PC BOARD (BROWN)	28480	4040-0749
A21MP3	4040-0750	7	1	EXTRACTOR-PC BOARD (RED)	28480	4040-0750
A21MP4	1480-0073	6	1	PIN-ROLL .062-IN-DIA .25-IN-LG BE-CU	28480	1480-0073
A21Q1	1855-0020	8	6	TRANSISTOR J-FET N-CHAN D-MODE TO-18 SI	28480	1855-0020
A21Q2	1854-0404	0	39	TRANSISTOR NPN SI TO-18 PD=360MW	28480	1854-0404
A21Q3	1854-0404	0		TRANSISTOR NPN SI TO-18 PD=360MW	28480	1854-0404
A21Q4	1854-0404	0		TRANSISTOR NPN SI TO-18 PD=360MW	28480	1854-0404
A21Q5	1854-0404	0		TRANSISTOR NPN SI TO-18 PD=360MW	28480	1854-0404
A21Q6	1854-0404	0		TRANSISTOR NPN SI TO-18 PD=360MW	28480	1854-0404
A21Q7	1854-0404	0		TRANSISTOR NPN SI TO-18 PD=360MW	28480	1854-0404
A21Q8	1854-0404	0		TRANSISTOR NPN SI TO-18 PD=360MW	28480	1854-0404
A21Q9	1854-0404	0		TRANSISTOR NPN SI TO-18 PD=360MW	28480	1854-0404
A21Q10	1854-0404	0		TRANSISTOR NPN SI TO-18 PD=360MW	28480	1854-0404

See introduction to this section for ordering information
*Indicates factory selected value

Table 6-3. Replaceable Parts

Reference Designation	HP Part Number	C D	Qty	Description	Mfr Code	Mfr Part Number
A21Q11	1854-0404	0		TRANSISTOR NPN SI TO-18 PD=360MW	28480	1854-0404
A21Q12	1855-0020	8		TRANSISTOR J-FET N-CHAN D-MODE TO-18 SI	28480	1855-0020
A21Q13	1854-0404	0		TRANSISTOR NPN SI TO-18 PD=360MW	28480	1854-0404
A21Q14	1854-0404	0		TRANSISTOR NPN SI TO-18 PD=360MW	28480	1854-0404
A21Q15	1853-0281	9	1	TRANSISTOR PNP 2N2907A SI TO-18 PD=400MW	04713	2N2907A
A21Q16	1854-0404	0		TRANSISTOR NPN SI TO-18 PD=360MW	28480	1854-0404
A21Q17	1855-0020	8		TRANSISTOR J-FET N-CHAN D-MODE TO-18 SI	28480	1855-0020
A21Q18	1854-0404	0		TRANSISTOR NPN SI TO-18 PD=360MW	28480	1854-0404
A21Q19	1854-0404	0		TRANSISTOR NPN SI TO-18 PD=360MW	28480	1854-0404
A21Q20	1854-0404	0		TRANSISTOR NPN SI TO-18 PD=360MW	28480	1854-0404
A21Q21	1854-0404	0		TRANSISTOR NPN SI TO-18 PD=360MW	28480	1854-0404
A21Q22	1854-0404	0		TRANSISTOR NPN SI TO-18 PD=360MW	28480	1854-0404
A21Q23	1855-0020	8		TRANSISTOR J-FET N-CHAN D-MODE TO-18 SI	28480	1855-0020
A21Q24	1854-0404	0		TRANSISTOR NPN SI TO-18 PD=360MW	28480	1854-0404
A21Q25	1854-0404	0		TRANSISTOR NPN SI TO-18 PD=360MW	28480	1854-0404
A21Q26	1854-0404	0		TRANSISTOR NPN SI TO-18 PD=360MW	28480	1854-0404
A21Q27	1854-0404	0		TRANSISTOR NPN SI TO-18 PD=360MW	28480	1854-0404
A21Q28	1854-0404	0		TRANSISTOR NPN SI TO-18 PD=360MW	28480	1854-0404
A21Q29	1854-0404	0		TRANSISTOR NPN SI TO-18 PD=360MW	28480	1854-0404
A21Q30	1855-0020	8		TRANSISTOR J-FET N-CHAN D-MODE TO-18 SI	28480	1855-0020
A21Q31	1854-0404	0		TRANSISTOR NPN SI TO-18 PD=360MW	28480	1854-0404
A21Q32	1854-0404	0		TRANSISTOR NPN SI TO-18 PD=360MW	28480	1854-0404
A21Q33	1854-0404	0		TRANSISTOR NPN SI TO-18 PD=360MW	28480	1854-0404
A21Q34	1854-0404	0		TRANSISTOR NPN SI TO-18 PD=360MW	28480	1854-0404
A21Q35	1854-0404	0		TRANSISTOR NPN SI TO-18 PD=360MW	28480	1854-0404
A21Q36	1854-0404	0		TRANSISTOR NPN SI TO-18 PD=360MW	28480	1854-0404
A21Q37	1855-0020	8		TRANSISTOR J-FET N-CHAN D-MODE TO-18 SI	28480	1855-0020
A21Q38	1854-0404	0		TRANSISTOR NPN SI TO-18 PD=360MW	28480	1854-0404
A21Q39	1854-0404	0		TRANSISTOR NPN SI TO-18 PD=360MW	28480	1854-0404
A21Q40	1854-0404	0		TRANSISTOR NPN SI TO-18 PD=360MW	28480	1854-0404
A21Q41	1854-0404	0		TRANSISTOR NPN SI TO-18 PD=360MW	28480	1854-0404
A21Q42	1854-0404	0		TRANSISTOR NPN SI TO-18 PD=360MW	28480	1854-0404
A21Q43	1855-0050	4	2	TRANSISTOR-JFET DUAL N-CHAN D-MODE SI	28480	1855-0050
A21Q44	1853-0007	7	6	TRANSISTOR PNP 2N3251 SI TO-18 PD=360MW	04713	2N3251
A21Q45	1853-0007	7		TRANSISTOR PNP 2N3251 SI TO-18 PD=360MW	04713	2N3251
A21Q46	1853-0007	7		TRANSISTOR PNP 2N3251 SI TO-18 PD=360MW	04713	2N3251
A21Q47	1854-0404	0		TRANSISTOR NPN SI TO-18 PD=360MW	28480	1854-0404
A21Q48	1854-0404	0		TRANSISTOR NPN SI TO-18 PD=360MW	28480	1854-0404
A21Q49	1854-0404	0		TRANSISTOR NPN SI TO-18 PD=360MW	28480	1854-0404
A21Q50	1855-0050	4		TRANSISTOR-JFET DUAL N-CHAN D-MODE SI	28480	1855-0050
A21Q51	1853-0007	7		TRANSISTOR PNP 2N3251 SI TO-18 PD=360MW	04713	2N3251
A21Q52	1853-0007	7		TRANSISTOR PNP 2N3251 SI TO-18 PD=360MW	04713	2N3251
A21Q53	1853-0007	7		TRANSISTOR PNP 2N3251 SI TO-18 PD=360MW	04713	2N3251
A21Q54	1854-0404	0		TRANSISTOR NPN SI TO-18 PD=360MW	28480	1854-0404
A21R1	0757-0199	3	44	RESISTOR 21.5K 1% .125W F TC=0+-100	24546	C4-1/8-T0-2152-F
A21R2	0757-0199	3		RESISTOR 21.5K 1% .125W F TC=0+-100	24546	C4-1/8-T0-2152-F
A21R3	0757-0199	3		RESISTOR 21.5K 1% .125W F TC=0+-100	24546	C4-1/8-T0-2152-F
A21R4	0757-0465	6	6	RESISTOR 100K 1% .125W F TC=0+-100	24546	C4-1/8-T0-1003-F
A21R11	0757-1094	9	1	RESISTOR 1.47K 1% .125W F TC=0+-100	24546	C4-1/8-T0-1471-F
A21R12	0757-0199	3		RESISTOR 21.5K 1% .125W F TC=0+-100	24546	C4-1/8-T0-2152-F
A21R13	0757-0199	3		RESISTOR 21.5K 1% .125W F TC=0+-100	24546	C4-1/8-T0-2152-F
A21R14	0757-0199	3		RESISTOR 21.5K 1% .125W F TC=0+-100	24546	C4-1/8-T0-2152-F
A21R15	0757-0465	6		RESISTOR 100K 1% .125W F TC=0+-100	24546	C4-1/8-T0-1003-F
A21R16	0757-0274	5	1	RESISTOR 1.21K 1% .125W F TC=0+-100	24546	C4-1/8-T0-1211-F
A21R17	0698-3155	1	1	RESISTOR 4.64K 1% .125W F TC=0+-100	24546	C4-1/8-T0-4641-F
A21R18	0757-0199	3		RESISTOR 21.5K 1% .125W F TC=0+-100	24546	C4-1/8-T0-2152-F
A21R19	0757-0199	3		RESISTOR 21.5K 1% .125W F TC=0+-100	24546	C4-1/8-T0-2152-F
A21R20	0757-0199	3		RESISTOR 21.5K 1% .125W F TC=0+-100	24546	C4-1/8-T0-2152-F
A21R21	0757-0465	6		RESISTOR 100K 1% .125W F TC=0+-100	24546	C4-1/8-T0-1003-F
A21R22	0698-3154	0	1	RESISTOR 4.22K 1% .125W F TC=0+-100	24546	C4-1/8-T0-4221-F
A21R23	0757-0447	4	1	RESISTOR 16.2K 1% .125W F TC=0+-100	24546	C4-1/8-T0-1622-F
A21R24	0757-0199	3		RESISTOR 21.5K 1% .125W F TC=0+-100	24546	C4-1/8-T0-2152-F
A21R25	0757-0199	3		RESISTOR 21.5K 1% .125W F TC=0+-100	24546	C4-1/8-T0-2152-F
A21R26	0757-0199	3		RESISTOR 21.5K 1% .125W F TC=0+-100	24546	C4-1/8-T0-2152-F
A21R27	0757-0465	6		RESISTOR 100K 1% .125W F TC=0+-100	24546	C4-1/8-T0-1003-F
A21R28	0757-0442	9	9	RESISTOR 10K 1% .125W F TC=0+-100	24546	C4-1/8-T0-1002-F
A21R29	0698-3162	0	1	RESISTOR 46.4K 1% .125W F TC=0+-100	24546	C4-1/8-T0-4642-F
A21R30	0757-0199	3		RESISTOR 21.5K 1% .125W F TC=0+-100	24546	C4-1/8-T0-2152-F
A21R31	0757-0199	3		RESISTOR 21.5K 1% .125W F TC=0+-100	24546	C4-1/8-T0-2152-F
A21R32	0757-0199	3		RESISTOR 21.5K 1% .125W F TC=0+-100	24546	C4-1/8-T0-2152-F
A21R33	0757-0465	6		RESISTOR 100K 1% .125W F TC=0+-100	24546	C4-1/8-T0-1003-F
A21R34	0698-3158	4	1	RESISTOR 23.7K 1% .125W F TC=0+-100	24546	C4-1/8-T0-2372-F
A21R35	0757-0470	3	1	RESISTOR 162K 1% .125W F TC=0+-100	24546	C4-1/8-T0-1623-F
A21R36	0757-0199	3		RESISTOR 21.5K 1% .125W F TC=0+-100	24546	C4-1/8-T0-2152-F

See introduction to this section for ordering information
*Indicates factory selected value

Table 6-3. Replaceable Parts

Reference Designation	HP Part Number	C D	Qty	Description	Mfr Code	Mfr Part Number
A21R37	0757-0199	3		RESISTOR 21.5K 1% .125W F TC=0+-100	24546	C4-1/8-T0-2152-F
A21R39	0757-0465	6		RESISTOR 100K 1% .125W F TC=0+-100	24546	C4-1/8-T0-1003-F
A21R40	0698-3453	2	1	RESISTOR 196K 1% .125W F TC=0+-100	24546	C4-1/8-T0-1963-F
A21R41	0757-0422	5	2	RESISTOR 909 1% .125W F TC=0+-100	24546	C4-1/8-T0-909R-F
A21R42	0698-0085	0	3	RESISTOR 2.61K 1% .125W F TC=0+-100	24546	C4-1/8-T0-2611-F
A21R43	0757-0422	5		RESISTOR 909 1% .125W F TC=0+-100	24546	C4-1/8-T0-909R-F
A21R44	0757-0279	0	2	RESISTOR 3.16K 1% .125W F TC=0+-100	24546	C4-1/8-T0-3161-F
A21R45	0757-0438	3	1	RESISTOR 5.11K 1% .125W F TC=0+-100	24546	C4-1/8-T0-5111-F
A21R46	0757-0199	3		RESISTOR 21.5K 1% .125W F TC=0+-100	24546	C4-1/8-T0-2152-F
A21R48	0757-0444	1	2	RESISTOR 12.1K 1% .125W F TC=0+-100	24546	C4-1/8-T0-1212-F
A21R49	0698-0085	0		RESISTOR 2.61K 1% .125W F TC=0+-100	24546	C4-1/8-T0-2611-F
A21R50	0757-0199	3		RESISTOR 21.5K 1% .125W F TC=0+-100	24546	C4-1/8-T0-2152-F
A21R51	0757-0199	3		RESISTOR 21.5K 1% .125W F TC=0+-100	24546	C4-1/8-T0-2152-F
A21R52	2100-2850	8	2	RESISTOR-TRMR 10K 10% WW SIDE-ADJ 20-TRN	02660	3810P-103
A21R53	0757-0199	3		RESISTOR 21.5K 1% .125W F TC=0+-100	24546	C4-1/8-T0-2152-F
A21R54	0757-0199	3		RESISTOR 21.5K 1% .125W F TC=0+-100	24546	C4-1/8-T0-2152-F
A21R55	2100-3054	6	2	RESISTOR-TRMR 50K 10% C SIDE-ADJ 17-TRN	02111	43P503
A21R56	0757-0199	3		RESISTOR 21.5K 1% .125W F TC=0+-100	24546	C4-1/8-T0-2152-F
A21R57	0757-0199	3		RESISTOR 21.5K 1% .125W F TC=0+-100	24546	C4-1/8-T0-2152-F
A21R58	2100-3094	4	2	RESISTOR-TRMR 100K 10% C SIDE-ADJ 17-TRN	02111	43P104
A21R59	0757-0199	3		RESISTOR 21.5K 1% .125W F TC=0+-100	24546	C4-1/8-T0-2152-F
A21R60	0757-0199	3		RESISTOR 21.5K 1% .125W F TC=0+-100	24546	C4-1/8-T0-2152-F
A21R61	0757-0199	3		RESISTOR 21.5K 1% .125W F TC=0+-100	24546	C4-1/8-T0-2152-F
A21R62	0757-0199	3		RESISTOR 21.5K 1% .125W F TC=0+-100	24546	C4-1/8-T0-2152-F
A21R63	0757-0199	3		RESISTOR 21.5K 1% .125W F TC=0+-100	24546	C4-1/8-T0-2152-F
A21R64	0698-0085	0		RESISTOR 2.61K 1% .125W F TC=0+-100	24546	C4-1/8-T0-2611-F
A21R65	0757-0199	3		RESISTOR 21.5K 1% .125W F TC=0+-100	24546	C4-1/8-T0-2152-F
A21R66	0757-0199	3		RESISTOR 21.5K 1% .125W F TC=0+-100	24546	C4-1/8-T0-2152-F
A21R67	0698-7794	2	1	RESISTOR 10K .25% .125W F TC=0+-100	19701	MF4C1/8-T0-1002-C
A21R68	0757-0442	9		RESISTOR 10K 1% .125W F TC=0+-100	24546	C4-1/8-T0-1002-F
A21R69	0757-0278	9	1	RESISTOR 1.78K 1% .125W F TC=0+-100	24546	C4-1/8-T0-1781-F
A21R70	0757-0199	3		RESISTOR 21.5K 1% .125W F TC=0+-100	24546	C4-1/8-T0-2152-F
A21R71	2100-3094	4		RESISTOR-TRMR 100K 10% C SIDE-ADJ 17-TRN	02111	43P104
A21R72	0698-7421	2	1	RESISTOR 40K .25% .125W F TC=0+-100	19701	MF4C1/8-T0-4002-C
A21R73	0757-0199	3		RESISTOR 21.5K 1% .125W F TC=0+-100	24546	C4-1/8-T0-2152-F
A21R74	0757-0280	3	3	RESISTOR 1K 1% .125W F TC=0+-100	24546	C4-1/8-T0-1001-F
A21R74	2100-3054	6		RESISTOR-TRMR 50K 10% C SIDE-ADJ 17-TRN	02111	43P503
A21R75	0698-3194	8	1	RESISTOR 20K .25% .125W F TC=0+-50	03888	PME55-1/8-T2-2002-C
A21R76	0757-0199	3		RESISTOR 21.5K 1% .125W F TC=0+-100	24546	C4-1/8-T0-2152-F
A21R77	2100-2850	8		RESISTOR-TRMR 10K 10% WW SIDE-ADJ 20-TRN	02660	3810P-103
A21R78	0698-7412	1	1	RESISTOR 13.3K .25% .125W F TC=0+-100	19701	MF4C1/8-T0-1332-C
A21R79	0757-0199	3		RESISTOR 21.5K 1% .125W F TC=0+-100	24546	C4-1/8-T0-2152-F
A21R80	0757-0199	3		RESISTOR 21.5K 1% .125W F TC=0+-100	24546	C4-1/8-T0-2152-F
A21R81	0757-0442	9		RESISTOR 10K 1% .125W F TC=0+-100	24546	C4-1/8-T0-1002-F
A21R82	0757-0280	3		RESISTOR 1K 1% .125W F TC=0+-100	24546	C4-1/8-T0-1001-F
A21R83	0757-0442	9		RESISTOR 10K 1% .125W F TC=0+-100	24546	C4-1/8-T0-1002-F
A21R84	0698-3447	4	3	RESISTOR 422 1% .125W F TC=0+-100	24546	C4-1/8-T0-422R-F
A21R85	0757-0442	9		RESISTOR 10K 1% .125W F TC=0+-100	24546	C4-1/8-T0-1002-F
A21R86	0698-0084	9	1	RESISTOR 2.15K 1% .125W F TC=0+-100	24546	C4-1/8-T0-2151-F
A21R87	0698-3447	4		RESISTOR 422 1% .125W F TC=0+-100	24546	C4-1/8-T0-422R-F
A21R88	0757-0444	1		RESISTOR 12.1K 1% .125W F TC=0+-100	24546	C4-1/8-T0-1212-F
A21R89	0698-0083	8	2	RESISTOR 1.96K 1% .125W F TC=0+-100	24546	C4-1/8-T0-1961-F
A21R90	0698-0083	8		RESISTOR 1.96K 1% .125W F TC=0+-100	24546	C4-1/8-T0-1961-F
A21R91	0698-3156	2	1	RESISTOR 14.7K 1% .125W F TC=0+-100	24546	C4-1/8-T0-1472-F
A21R92	2100-2851	9	2	RESISTOR-TRMR 2K 10% WW SIDE-ADJ 20-TRN	02660	3810P-202
A21R93	0698-4055	2	1	RESISTOR 1K .25% .125W F TC=0+-100	03888	PME55-1/8-T0-1001-C
A21R94	0757-0199	3		RESISTOR 21.5K 1% .125W F TC=0+-100	24546	C4-1/8-T0-2152-F
A21R95	0698-8860	5	1	RESISTOR 7.52K .25% .125W F TC=0+-100	28480	0698-8860
A21R96	0698-8869	4	1	RESISTOR 2.15K .25% .125W F TC=0+-100	28480	0698-8869
A21R97	0757-0199	3		RESISTOR 21.5K 1% .125W F TC=0+-100	24546	C4-1/8-T0-2152-F
A21R98	0757-0199	3		RESISTOR 21.5K 1% .125W F TC=0+-100	24546	C4-1/8-T0-2152-F
A21R99	0698-8873	0	1	RESISTOR 232 .25% .125W F TC=0+-100	28480	0698-8873
A21R100	0757-0199	3		RESISTOR 21.5K 1% .125W F TC=0+-100	24546	C4-1/8-T0-2152-F
A21R101	0757-0199	3		RESISTOR 21.5K 1% .125W F TC=0+-100	24546	C4-1/8-T0-2152-F
A21R102	0698-8872	9	1	RESISTOR 532 .25% .125W F TC=0+-100	28480	0698-8872
A21R103	0757-0199	3		RESISTOR 21.5K 1% .125W F TC=0+-100	24546	C4-1/8-T0-2152-F
A21R104	0757-0199	3		RESISTOR 21.5K 1% .125W F TC=0+-100	24546	C4-1/8-T0-2152-F
A21R105	0698-8870	7	1	RESISTOR 2.143K .25% .125W F TC=0+-100	28480	0698-8870
A21R106	0757-0442	9		RESISTOR 10K 1% .125W F TC=0+-100	24546	C4-1/8-T0-1002-F
A21R107	0757-0442	9		RESISTOR 10K 1% .125W F TC=0+-100	24546	C4-1/8-T0-1002-F
A21R108	0698-3447	4		RESISTOR 422 1% .125W F TC=0+-100	24546	C4-1/8-T0-422R-F
A21R109	0757-0442	9		RESISTOR 10K 1% .125W F TC=0+-100	24546	C4-1/8-T0-1002-F
A21R110	0757-0817	2	1	RESISTOR 750 1% .5W F TC=0+-100	28480	0757-0817
A21R111	0757-0279	0		RESISTOR 3.16K 1% .125W F TC=0+-100	24546	C4-1/8-T0-3161-F
A21R112	0757-0442	9		RESISTOR 10K 1% .125W F TC=0+-100	24546	C4-1/8-T0-1002-F

See introduction to this section for ordering information
*Indicates factory selected value

Table 6-3. Replaceable Parts

Reference Designation	HP Part Number	C D	Qty	Description	Mfr Code	Mfr Part Number
A21R113	0757-0440	7	1	RESISTOR 7.5K 1% .125W F TC=0+-100	24546	C4-1/8-T0-7501-F
A21R114	0698-3136	8	1	RESISTOR 17.8K 1% .125W F TC=0+-100	24546	C4-1/8-T0-1782-F
A21R115	0698-4482	9	1	RESISTOR 17.4K 1% .125W F TC=0+-100	03888	PME55-1/8-T0-1742-F
A21R116	0757-0416	7	1	RESISTOR 511 1% .125W F TC=0+-100	24546	C4-1/8-T0-511R-F
A21R117	0757-0280	3		RESISTOR 1K 1% .125W F TC=0+-100	24546	C4-1/8-T0-1001-F
A21R118	0698-3440	7	3	RESISTOR 196 1% .125W F TC=0+-100	24546	C4-1/8-T0-196R-F
A21R119	0757-0394	0	1	RESISTOR 51.1 1% .125W F TC=0+-100	24546	C4-1/8-T0-51R1-F
A21R120	0698-3440	7		RESISTOR 196 1% .125W F TC=0+-100	24546	C4-1/8-T0-196R-F
A21R121	0698-3440	7		RESISTOR 196 1% .125W F TC=0+-100	24546	C4-1/8-T0-196R-F
A21R122	0757-0199	3		RESISTOR 21.5K 1% .125W F TC=0+-100	24546	C4-1/8-T0-2152-F
A21R123	0698-3260	9	2	RESISTOR 464K 1% .125W F TC=0+-100	28480	0698-3260
A21R124	0698-3260	9		RESISTOR 464K 1% .125W F TC=0+-100	28480	0698-3260
A21R132	2100-2851	9		RESISTOR-TRMR 2K 10% WW SIDE-ADJ 20-TRN	02660	3810P-202
A21S1	3101-1274	1	1	SWITCH-SL SPDT SUBMIN 2A 120VAC PC	28480	3101-1274
A21TP1	1251-0600	0	7	CONNECTOR-SGL CONT PIN 1.14-MM-BSC-SZ SQ	28480	1251-0600
A21TP2	1251-0600	0		CONNECTOR-SGL CONT PIN 1.14-MM-BSC-SZ SQ	28480	1251-0600
A21TP3	1251-0600	0		CONNECTOR-SGL CONT PIN 1.14-MM-BSC-SZ SQ	28480	1251-0600
A21TP4	1251-0600	0		CONNECTOR-SGL CONT PIN 1.14-MM-BSC-SZ SQ	28480	1251-0600
A21TP5	1251-0600	0		CONNECTOR-SGL CONT PIN 1.14-MM-BSC-SZ SQ	28480	1251-0600
A21TP6	0360-0077	5	1	TERMINAL-STUD SGL-TUR SWGFRM-MTG	28480	0360-0077
A21TP7	1251-0600	0		CONNECTOR-SGL CONT PIN 1.14-MM-BSC-SZ SQ	28480	1251-0600
A21TP8	1251-0600	0		CONNECTOR-SGL CONT PIN 1.14-MM-BSC-SZ SQ	28480	1251-0600
A21VR1	1902-0025	4	1	DIODE-ZNR 10V 5% DO-35 PD=.4W TC=+.06%	28480	1902-0025
A21VR2	1902-0064	1	1	DIODE-ZNR 7.5V 5% DO-35 PD=.4W TC=+.05%	28480	1902-0064
A21VR3	1902-3171	7	1	DIODE-ZNR 11V 5% DO-35 PD=.4W TC=+.062%	28480	1902-3171
A21VR4	1902-3182	0	1	DIODE-ZNR 12.1V 5% DO-35 PD=.4W	28480	1902-3182

See introduction to this section for ordering information
*Indicates factory selected value

Table 6-3. Replaceable Parts

Reference Designation	HP Part Number	C D	Qty	Description	Mfr Code	Mfr Part Number
A22	5061-5411	2	1	LOG AMPLIFIER ASSEMBLY	28480	5061-5411
A22C1	0160-4554	7	67	CAPACITOR-FXD .01UF +-20% 50VDC CER	28480	0160-4554
A22C2	0180-0197	8	1	CAPACITOR-FXD 2.2UF+-10% 20VDC TA	56289	150D225X9020A2
A22C3	0160-4554	7		CAPACITOR-FXD .01UF +-20% 50VDC CER	28480	0160-4554
A22C4	0160-4084	8	2	CAPACITOR-FXD .1UF +-20% 50VDC CER	28480	0160-4084
A22C5	0160-4084	8		CAPACITOR-FXD .1UF +-20% 50VDC CER	28480	0160-4084
A22C6	0160-4554	7		CAPACITOR-FXD .01UF +-20% 50VDC CER	28480	0160-4554
A22C7	0160-3879	7	1	CAPACITOR-FXD .01UF +-20% 100VDC CER	28480	0160-3879
A22C8	0160-4554	7		CAPACITOR-FXD .01UF +-20% 50VDC CER	28480	0160-4554
A22C9	0160-4554	7		CAPACITOR-FXD .01UF +-20% 50VDC CER	28480	0160-4554
A22C10	0160-4554	7		CAPACITOR-FXD .01UF +-20% 50VDC CER	28480	0160-4554
A22C11	0160-4554	7		CAPACITOR-FXD .01UF +-20% 50VDC CER	28480	0160-4554
A22C12	0160-4554	7		CAPACITOR-FXD .01UF +-20% 50VDC CER	28480	0160-4554
A22C13				NOT ASSIGNED		
A22C14	0160-4554	7		CAPACITOR-FXD .01UF +-20% 50VDC CER	28480	0160-4554
A22C15	0160-4554	7		CAPACITOR-FXD .01UF +-20% 50VDC CER	28480	0160-4554
A22C16	0160-4554	7		CAPACITOR-FXD .01UF +-20% 50VDC CER	28480	0160-4554
A22C17	0160-4554	7		CAPACITOR-FXD .01UF +-20% 50VDC CER	28480	0160-4554
A22C18	0160-4554	7		CAPACITOR-FXD .01UF +-20% 50VDC CER	28480	0160-4554
A22C19	0160-4554	7		CAPACITOR-FXD .01UF +-20% 50VDC CER	28480	0160-4554
A22C20	0160-4554	7		CAPACITOR-FXD .01UF +-20% 50VDC CER	28480	0160-4554
A22C21	0160-4554	7		CAPACITOR-FXD .01UF +-20% 50VDC CER	28480	0160-4554
A22C22	0160-4554	7		CAPACITOR-FXD .01UF +-20% 50VDC CER	28480	0160-4554
A22C23	0160-4554	7		CAPACITOR-FXD .01UF +-20% 50VDC CER	28480	0160-4554
A22C24	0160-4554	7		CAPACITOR-FXD .01UF +-20% 50VDC CER	28480	0160-4554
A22C25	0160-4554	7		CAPACITOR-FXD .01UF +-20% 50VDC CER	28480	0160-4554
A22C26	0160-4554	7		CAPACITOR-FXD .01UF +-20% 50VDC CER	28480	0160-4554
A22C27	0160-4554	7		CAPACITOR-FXD .01UF +-20% 50VDC CER	28480	0160-4554
A22C28	0160-4554	7		CAPACITOR-FXD .01UF +-20% 50VDC CER	28480	0160-4554
A22C29	0160-4554	7		CAPACITOR-FXD .01UF +-20% 50VDC CER	28480	0160-4554
A22C30	0160-4554	7		CAPACITOR-FXD .01UF +-20% 50VDC CER	28480	0160-4554
A22C31	0160-4554	7		CAPACITOR-FXD .01UF +-20% 50VDC CER	28480	0160-4554
A22C32	0160-4554	7		CAPACITOR-FXD .01UF +-20% 50VDC CER	28480	0160-4554
A22C33	0160-4554	7		CAPACITOR-FXD .01UF +-20% 50VDC CER	28480	0160-4554
A22C34	0160-4554	7		CAPACITOR-FXD .01UF +-20% 50VDC CER	28480	0160-4554
A22C35				NOT ASSIGNED		
A22C36	0160-4554	7		CAPACITOR-FXD .01UF +-20% 50VDC CER	28480	0160-4554
A22C37	0160-4554	7		CAPACITOR-FXD .01UF +-20% 50VDC CER	28480	0160-4554
A22C38	0160-4554	7		CAPACITOR-FXD .01UF +-20% 50VDC CER	28480	0160-4554
A22C39	0160-4554	7		CAPACITOR-FXD .01UF +-20% 50VDC CER	28480	0160-4554
A22C40	0160-4554	7		CAPACITOR-FXD .01UF +-20% 50VDC CER	28480	0160-4554
A22C41	0160-4554	7		CAPACITOR-FXD .01UF +-20% 50VDC CER	28480	0160-4554
A22C42	0160-4554	7		CAPACITOR-FXD .01UF +-20% 50VDC CER	28480	0160-4554
A22C43	0160-4554	7		CAPACITOR-FXD .01UF +-20% 50VDC CER	28480	0160-4554
A22C44	0160-4554	7		CAPACITOR-FXD .01UF +-20% 50VDC CER	28480	0160-4554
A22C45	0160-4554	7		CAPACITOR-FXD .01UF +-20% 50VDC CER	28480	0160-4554
A22C46	0160-4554	7		CAPACITOR-FXD .01UF +-20% 50VDC CER	28480	0160-4554
A22C47	0160-4554	7		CAPACITOR-FXD .01UF +-20% 50VDC CER	28480	0160-4554
A22C48	0160-4554	7		CAPACITOR-FXD .01UF +-20% 50VDC CER	28480	0160-4554
A22C49	0160-4554	7		CAPACITOR-FXD .01UF +-20% 50VDC CER	28480	0160-4554
A22C50	0160-4554	7		CAPACITOR-FXD .01UF +-20% 50VDC CER	28480	0160-4554
A22C51	0160-4554	7		CAPACITOR-FXD .01UF +-20% 50VDC CER	28480	0160-4554
A22C52	0160-4554	7		CAPACITOR-FXD .01UF +-20% 50VDC CER	28480	0160-4554
A22C53	0160-4554	7		CAPACITOR-FXD .01UF +-20% 50VDC CER	28480	0160-4554
A22C54	0160-4554	7		CAPACITOR-FXD .01UF +-20% 50VDC CER	28480	0160-4554
A22C55	0160-4554	7		CAPACITOR-FXD .01UF +-20% 50VDC CER	28480	0160-4554
A22C56	0160-4554	7		CAPACITOR-FXD .01UF +-20% 50VDC CER	28480	0160-4554
A22C57	0160-4554	7		CAPACITOR-FXD .01UF +-20% 50VDC CER	28480	0160-4554
A22C58	0160-4554	7		CAPACITOR-FXD .01UF +-20% 50VDC CER	28480	0160-4554
A22C59	0160-4554	7		CAPACITOR-FXD .01UF +-20% 50VDC CER	28480	0160-4554
A22C60	0160-4554	7		CAPACITOR-FXD .01UF +-20% 50VDC CER	28480	0160-4554
A22C61	0160-4554	7		CAPACITOR-FXD .01UF +-20% 50VDC CER	28480	0160-4554
A22C62	0160-4554	7		CAPACITOR-FXD .01UF +-20% 50VDC CER	28480	0160-4554
A22C63	0160-4554	7		CAPACITOR-FXD .01UF +-20% 50VDC CER	28480	0160-4554
A22C64	0160-4554	7		CAPACITOR-FXD .01UF +-20% 50VDC CER	28480	0160-4554
A22C65	0160-4554	7		CAPACITOR-FXD .01UF +-20% 50VDC CER	28480	0160-4554
A22C66	0160-4554	7		CAPACITOR-FXD .01UF +-20% 50VDC CER	28480	0160-4554
A22C67	0160-4554	7		CAPACITOR-FXD .01UF +-20% 50VDC CER	28480	0160-4554
A22C68	0160-4554	7		CAPACITOR-FXD .01UF +-20% 50VDC CER	28480	0160-4554
A22C69	0160-4554	7		CAPACITOR-FXD .01UF +-20% 50VDC CER	28480	0160-4554
A22C70	0160-4519	4	1	CAPACITOR-FXD 9.1PF +-.5PF 200VDC CER	28480	0160-4519

See introduction to this section for ordering information
*Indicates factory selected value

Table 6-3. Replaceable Parts

Reference Designation	HP Part Number	C D	Qty	Description	Mfr Code	Mfr Part Number
A22C71	0140-0195	2	1	CAPACITOR-FXD 130PF +-5% 300VDC MICA	72136	DM15F131J0300WV1CR
A22C72	0160-4386	3	1	CAPACITOR-FXD 33PF +-5% 200VDC CER 0+-30	28480	0160-4386
A22C73	0160-3872	0	1	CAPACITOR-FXD 2.2PF +-.25PF 200VDC CER	28480	0160-3872
A22C74	0160-4554	7		CAPACITOR-FXD .01UF +-20% 50VDC CER	28480	0160-4554
A22C75	0160-4554	7		CAPACITOR-FXD .01UF +-20% 50VDC CER	28480	0160-4554
A22C76	0160-4554	7		CAPACITOR-FXD .01UF +-20% 50VDC CER	28480	0160-4554
A22C77	0160-4554	7		CAPACITOR-FXD .01UF +-20% 50VDC CER	28480	0160-4554
A22CR1	1910-0016	0	1	DIODE-GE 60V 60MA 1US DO-7	28480	1910-0016
A22CR2	1901-0050	3	5	DIODE-SWITCHING 80V 200MA 2NS DO-35	28480	1901-0050
A22CR3				NOT ASSIGNED		
A22CR4	1901-0050	3		DIODE-SWITCHING 80V 200MA 2NS DO-35	28480	1901-0050
A22CR5				NOT ASSIGNED		
A22CR6	1901-1085	6	17	DIODE-SM SIG SCHOTTKY	28480	1901-1085
A22CR7	1901-1085	6		DIODE-SM SIG SCHOTTKY	28480	1901-1085
A22CR8	1901-1085	6		DIODE-SM SIG SCHOTTKY	28480	1901-1085
A22CR9	1901-1085	6		DIODE-SM SIG SCHOTTKY	28480	1901-1085
A22CR10	1901-1085	6		DIODE-SM SIG SCHOTTKY	28480	1901-1085
A22CR11	1901-1085	6		DIODE-SM SIG SCHOTTKY	28480	1901-1085
A22CR12	1901-1070	9	7	DIODE-PIN 110V	28480	1901-1070
A22CR13	1901-1085	6		DIODE-SM SIG SCHOTTKY	28480	1901-1085
A22CR14	1901-1085	6		DIODE-SM SIG SCHOTTKY	28480	1901-1085
A22CR15	1901-1070	9		DIODE-PIN 110V	28480	1901-1070
A22CR16	1901-1070	9		DIODE-PIN 110V	28480	1901-1070
A22CR17	1901-1085	6		DIODE-SM SIG SCHOTTKY	28480	1901-1085
A22CR18	1901-1085	6		DIODE-SM SIG SCHOTTKY	28480	1901-1085
A22CR19	1901-1070	9		DIODE-PIN 110V	28480	1901-1070
A22CR20	1901-1085	6		DIODE-SM SIG SCHOTTKY	28480	1901-1085
A22CR21	1901-1085	6		DIODE-SM SIG SCHOTTKY	28480	1901-1085
A22CR22	1901-0040	1	1	DIODE-SWITCHING 30V 50MA 2NS DO-35	28480	1901-0040
A22CR23	1901-1085	6		DIODE-SM SIG SCHOTTKY	28480	1901-1085
A22CR24	1901-1085	6		DIODE-SM SIG SCHOTTKY	28480	1901-1085
A22CR25	1901-1070	9		DIODE-PIN 110V	28480	1901-1070
A22CR26	1901-1085	6		DIODE-SM SIG SCHOTTKY	28480	1901-1085
A22CR27	1901-1085	6		DIODE-SM SIG SCHOTTKY	28480	1901-1085
A22CR28	1901-1070	9		DIODE-PIN 110V	28480	1901-1070
A22CR29	1901-1070	9		DIODE-PIN 110V	28480	1901-1070
A22CR30	1901-1085	6		DIODE-SM SIG SCHOTTKY	28480	1901-1085
A22CR31	1901-0050	3		DIODE-SWITCHING 80V 200MA 2NS DO-35	28480	1901-0050
A22CR32	1901-0050	3		DIODE-SWITCHING 80V 200MA 2NS DO-35	28480	1901-0050
A22CR33	1901-0050	3		DIODE-SWITCHING 80V 200MA 2NS DO-35	28480	1901-0050
A22E1	9170-0029	3	1	CORE-SHIELDING BEAD	28480	9170-0029
A22L1	9100-1618	1	1	INDUCTOR RF-CH-MLD 5.6UH 10%	28480	9100-1618
A22L2	9140-0144	0	1	INDUCTOR RF-CH-MLD 4.7UH 10% .105DX.26LG	28480	9140-0144
A22L3	9140-0105	3	2	INDUCTOR RF-CH-MLD 8.2UH 10%	28480	9140-0105
A22L4	9100-1619	2	2	INDUCTOR RF-CH-MLD 6.8UH 10%	28480	9100-1619
A22L5	9100-1619	2		INDUCTOR RF-CH-MLD 6.8UH 10%	28480	9100-1619
A22L6	9140-0114	4	3	INDUCTOR RF-CH-MLD 10UH 10% .166DX.385LG	28480	9140-0114
A22L7	9140-0114	4		INDUCTOR RF-CH-MLD 10UH 10% .166DX.385LG	28480	9140-0114
A22L8	9140-0114	4		INDUCTOR RF-CH-MLD 10UH 10% .166DX.385LG	28480	9140-0114
A22L9	9140-0112	2	1	INDUCTOR RF-CH-MLD 4.7UH 10%	28480	9140-0112
A22L10	9140-0105	3		INDUCTOR RF-CH-MLD 8.2UH 10%	28480	9140-0105
A22L11	9100-1627	2	1	INDUCTOR RF-CH-MLD 39UH 5% .166DX.385LG	28480	9100-1627
A22L12	9100-1629	4	1	INDUCTOR RF-CH-MLD 47UH 5% .166DX.385LG	28480	9100-1629
A22L13	9100-1622	7	1	INDUCTOR RF-CH-MLD 24UH 5% .166DX.385LG	28480	9100-1622
A22L14	9100-2257	6	1	INDUCTOR RF-CH-MLD 820NH 10% .105DX.26LG	28480	9100-2257
A22Q1	1854-0637	1	1	TRANSISTOR NPN 2N2219A SI TO-5 PD=800MW	01295	2N2219A
A22Q2	1853-0281	9	3	TRANSISTOR PNP 2N2907A SI TO-18 PD=400MW	04713	2N2907A
A22Q3	1853-0281	9		TRANSISTOR PNP 2N2907A SI TO-18 PD=400MW	04713	2N2907A
A22Q4	1853-0015	7	5	TRANSISTOR PNP SI PD=200MW FT=500MHZ	28480	1853-0015
A22Q5	1853-0015	7		TRANSISTOR PNP SI PD=200MW FT=500MHZ	28480	1853-0015
A22Q6	1853-0007	7	1	TRANSISTOR PNP 2N3251 SI TO-18 PD=360MW	04713	2N3251
A22Q7	1854-0019	3	12	TRANSISTOR NPN SI TO-18 PD=360MW	28480	1854-0019
A22Q8	1853-0015	7		TRANSISTOR PNP SI PD=200MW FT=500MHZ	28480	1853-0015
A22Q9	1854-0019	3		TRANSISTOR NPN SI TO-18 PD=360MW	28480	1854-0019
A22Q10	1853-0015	7		TRANSISTOR PNP SI PD=200MW FT=500MHZ	28480	1853-0015
A22Q11	1854-0019	3		TRANSISTOR NPN SI TO-18 PD=360MW	28480	1854-0019
A22Q12	1853-0015	7		TRANSISTOR PNP SI PD=200MW FT=500MHZ	28480	1853-0015
A22Q13	1854-0019	3		TRANSISTOR NPN SI TO-18 PD=360MW	28480	1854-0019
A22Q14	1854-0019	3		TRANSISTOR NPN SI TO-18 PD=360MW	28480	1854-0019
A22Q15	1854-0019	3		TRANSISTOR NPN SI TO-18 PD=360MW	28480	1854-0019
A22Q16	1854-0019	3		TRANSISTOR NPN SI TO-18 PD=360MW	28480	1854-0019
A22Q17	1854-0019	3		TRANSISTOR NPN SI TO-18 PD=360MW	28480	1854-0019
A22Q18	1854-0019	3		TRANSISTOR NPN SI TO-18 PD=360MW	28480	1854-0019
A22Q19	1854-0019	3		TRANSISTOR NPN SI TO-18 PD=360MW	28480	1854-0019
A22Q20	1854-0019	3		TRANSISTOR NPN SI TO-18 PD=360MW	28480	1854-0019

See introduction to this section for ordering information
*Indicates factory selected value

Table 6-3. Replaceable Parts

Reference Designation	HP Part Number	C D	Qty	Description	Mfr Code	Mfr Part Number
A22Q21	1854-0475	5	1	TRANSISTOR-DUAL NPN PD=750MW	28480	1854-0475
A22Q22	1854-0404	0	2	TRANSISTOR NPN SI TO-18 PD=360MW	28480	1854-0404
A22Q23	1853-0281	9		TRANSISTOR PNP 2N2907A SI TO-18 PD=400MW	04713	2N2907A
A22Q24	1854-0404	0		TRANSISTOR NPN SI TO-18 PD=360MW	28480	1854-0404
A22Q25	1854-0019	3		TRANSISTOR NPN SI TO-18 PD=360MW	28480	1854-0019
A22R1	0757-0317	7	1	RESISTOR 1.33K 1% .125W F TC=0+-100	24546	C4-1/8-T0-1331-F
A22R2	0757-0280	3	8	RESISTOR 1K 1% .125W F TC=0+-100	24546	C4-1/8-T0-1001-F
A22R3	0698-0084	9	1	RESISTOR 2.15K 1% .125W F TC=0+-100	24546	C4-1/8-T0-2151-F
A22R4	0698-3430	5	1	RESISTOR 21.5 1% .125W F TC=0+-100	03888	PME55-1/8-T0-21R5-F
A22R5	0757-0443	0	1	RESISTOR 11K 1% .125W F TC=0+-100	24546	C4-1/8-T0-1102-F
A22R6	0757-0442	9	4	RESISTOR 10K 1% .125W F TC=0+-100	24546	C4-1/8-T0-1002-F
A22R7	0757-0465	6	4	RESISTOR 100K 1% .125W F TC=0+-100	24546	C4-1/8-T0-1003-F
A22R8	0757-0442	9		RESISTOR 10K 1% .125W F TC=0+-100	24546	C4-1/8-T0-1002-F
A22R9	0698-3450	9	1	RESISTOR 42.2K 1% .125W F TC=0+-100	24546	C4-1/8-T0-4222-F
A22R10	2100-2633	5	2	RESISTOR-TRMR 1K 10% C SIDE-ADJ 1-TRN	30983	ET50X102
A22R11	0698-3155	1	1	RESISTOR 4.64K 1% .125W F TC=0+-100	24546	C4-1/8-T0-4641-F
A22R12	0757-0458	7	2	RESISTOR 51.1K 1% .125W F TC=0+-100	24546	C4-1/8-T0-5112-F
A22R13	0757-0401	0	8	RESISTOR 100 1% .125W F TC=0+-100	24546	C4-1/8-T0-101-F
A22R14	0757-0460	1	1	RESISTOR 61.9K 1% .125W F TC=0+-100	24546	C4-1/8-T0-6192-F
A22R15	0757-0458	7		RESISTOR 51.1K 1% .125W F TC=0+-100	24546	C4-1/8-T0-5112-F
A22R16	0757-0180	2	1	RESISTOR 31.6 1% .125W F TC=0+-100	28480	0757-0180
A22R17	0757-0464	5	1	RESISTOR 90.9K 1% .125W F TC=0+-100	24546	C4-1/8-T0-9092-F
A22R18	0698-3136	8	2	RESISTOR 17.8K 1% .125W F TC=0+-100	24546	C4-1/8-T0-1782-F
A22R19	0757-0123	3	1	RESISTOR 34.8K 1% .125W F TC=0+-100	28480	0757-0123
A22R20	0698-0083	8	2	RESISTOR 1.96K 1% .125W F TC=0+-100	24546	C4-1/8-T0-1961-F
A22R21	2100-2489	9	2	RESISTOR-TRMR 5K 10% C SIDE-ADJ 1-TRN	30983	ET50X502
A22R22	0698-3452	1	1	RESISTOR 147K 1% .125W F TC=0+-100	24546	C4-1/8-T0-1473-F
A22R23	2100-2514	1	1	RESISTOR-TRMR 20K 10% C SIDE-ADJ 1-TRN	30983	ET50W203
A22R24	0757-0274	5	3	RESISTOR 1.21K 1% .125W F TC=0+-100	24546	C4-1/8-T0-1211-F
A22R25	0757-0274	5		RESISTOR 1.21K 1% .125W F TC=0+-100	24546	C4-1/8-T0-1211-F
A22R26	0757-0274	5		RESISTOR 1.21K 1% .125W F TC=0+-100	24546	C4-1/8-T0-1211-F
A22R27	2100-2489	9		RESISTOR-TRMR 5K 10% C SIDE-ADJ 1-TRN	30983	ET50X502
A22R28	0757-0346	2	14	RESISTOR 10 1% .125W F TC=0+-100	24546	C4-1/8-T0-10R0-F
A22R29	0757-0346	2		RESISTOR 10 1% .125W F TC=0+-100	24546	C4-1/8-T0-10R0-F
A22R30	2100-2522	1	3	RESISTOR-TRMR 10K 10% C SIDE-ADJ 1-TRN	30983	ET50X103
A22R31	0757-0346	2		RESISTOR 10 1% .125W F TC=0+-100	24546	C4-1/8-T0-10R0-F
A22R32	0757-0346	2		RESISTOR 10 1% .125W F TC=0+-100	24546	C4-1/8-T0-10R0-F
A22R33	2100-2522	1		RESISTOR-TRMR 10K 10% C SIDE-ADJ 1-TRN	30983	ET50X103
A22R34	2100-2521	0	1	RESISTOR-TRMR 2K 10% C SIDE-ADJ 1-TRN	30983	ET50X202
A22R35	0757-0346	2		RESISTOR 10 1% .125W F TC=0+-100	24546	C4-1/8-T0-10R0-F
A22R36	0757-0346	2		RESISTOR 10 1% .125W F TC=0+-100	24546	C4-1/8-T0-10R0-F
A22R37	0757-0442	9		RESISTOR 10K 1% .125W F TC=0+-100	24546	C4-1/8-T0-1002-F
A22R38	0698-3151	7	1	RESISTOR 2.87K 1% .125W F TC=0+-100	24546	C4-1/8-T0-2871-F
A22R39	2100-2520	9	1	RESISTOR-TRMR 50 20% C SIDE-ADJ 1-TRN	30983	ET50X500
A22R40	0757-0442	9		RESISTOR 10K 1% .125W F TC=0+-100	24546	C4-1/8-T0-1002-F
A22R41	0757-0290	5	1	RESISTOR 6.19K 1% .125W F TC=0+-100	19701	MF4C1/8-T0-6191-F
A22R42	0757-0200	7	1	RESISTOR 5.62K 1% .125W F TC=0+-100	24546	C4-1/8-T0-5621-F
A22R43	0757-0447	4	3	RESISTOR 16.2K 1% .125W F TC=0+-100	24546	C4-1/8-T0-1622-F
A22R44	0757-0420	3	2	RESISTOR 750 1% .125W F TC=0+-100	24546	C4-1/8-T0-751-F
A22R45	0698-3444	1	8	RESISTOR 316 1% .125W F TC=0+-100	24546	C4-1/8-T0-316R-F
A22R46	0698-3156	2	1	RESISTOR 14.7K 1% .125W F TC=0+-100	24546	C4-1/8-T0-1472-F
A22R47	0757-0346	2		RESISTOR 10 1% .125W F TC=0+-100	24546	C4-1/8-T0-10R0-F
A22R48	0698-3150	6	4	RESISTOR 2.37K 1% .125W F TC=0+-100	24546	C4-1/8-T0-2371-F
A22R49	0698-3132	4	1	RESISTOR 261 1% .125W F TC=0+-100	24546	C4-1/8-T0-2610-F
A22R50	0757-0279	0	4	RESISTOR 3.16K 1% .125W F TC=0+-100	24546	C4-1/8-T0-3161-F
A22R51	0757-0346	2		RESISTOR 10 1% .125W F TC=0+-100	24546	C4-1/8-T0-10R0-F
A22R52	0698-3444	1		RESISTOR 316 1% .125W F TC=0+-100	24546	C4-1/8-T0-316R-F
A22R53	0757-0444	1	6	RESISTOR 12.1K 1% .125W F TC=0+-100	24546	C4-1/8-T0-1212-F
A22R54	0757-0444	1		RESISTOR 12.1K 1% .125W F TC=0+-100	24546	C4-1/8-T0-1212-F
A22R55	0757-0440	7	8	RESISTOR 7.5K 1% .125W F TC=0+-100	24546	C4-1/8-T0-7501-F
A22R56	0757-0401	0		RESISTOR 100 1% .125W F TC=0+-100	24546	C4-1/8-T0-101-F
A22R57	0757-0280	3		RESISTOR 1K 1% .125W F TC=0+-100	24546	C4-1/8-T0-1001-F
A22R58	0757-0346	2		RESISTOR 10 1% .125W F TC=0+-100	24546	C4-1/8-T0-10R0-F
A22R59	0698-3150	6		RESISTOR 2.37K 1% .125W F TC=0+-100	24546	C4-1/8-T0-2371-F
A22R60	0698-3444	1		RESISTOR 316 1% .125W F TC=0+-100	24546	C4-1/8-T0-316R-F
A22R61	0757-0280	3		RESISTOR 1K 1% .125W F TC=0+-100	24546	C4-1/8-T0-1001-F
A22R62	0757-0444	1		RESISTOR 12.1K 1% .125W F TC=0+-100	24546	C4-1/8-T0-1212-F
A22R63	0757-0444	1		RESISTOR 12.1K 1% .125W F TC=0+-100	24546	C4-1/8-T0-1212-F
A22R64	0757-0440	7		RESISTOR 7.5K 1% .125W F TC=0+-100	24546	C4-1/8-T0-7501-F
A22R65	0757-0401	0		RESISTOR 100 1% .125W F TC=0+-100	24546	C4-1/8-T0-101-F
A22R66	0757-0280	3		RESISTOR 1K 1% .125W F TC=0+-100	24546	C4-1/8-T0-1001-F
A22R67	0757-0346	2		RESISTOR 10 1% .125W F TC=0+-100	24546	C4-1/8-T0-10R0-F
A22R68	0698-8958	2	1	RESISTOR 511K 1% .125W F TC=0+-100	28480	0698-8958
A22R69	2100-2692	6	1	RESISTOR-TRMR 1M 20% C SIDE-ADJ 1-TRN	30983	ET50X105
A22R70	0698-3444	1		RESISTOR 316 1% .125W F TC=0+-100	24546	C4-1/8-T0-316R-F

See introduction to this section for ordering information
*Indicates factory selected value

Table 6-3. Replaceable Parts

Reference Designation	HP Part Number	C D	Qty	Description	Mfr Code	Mfr Part Number
A22R71	0757-0279	0		RESISTOR 3.16K 1% .125W F TC=0+-100	24546	C4-1/8-T0-3161-F
A22R72	0757-0444	1		RESISTOR 12.1K 1% .125W F TC=0+-100	24546	C4-1/8-T0-1212-F
A22R73	0757-0444	1		RESISTOR 12.1K 1% .125W F TC=0+-100	24546	C4-1/8-T0-1212-F
A22R74	0757-0440	7		RESISTOR 7.5K 1% .125W F TC=0+-100	24546	C4-1/8-T0-7501-F
A22R75	0757-0401	0		RESISTOR 100 1% .125W F TC=0+-100	24546	C4-1/8-T0-101-F
A22R76	0757-0280	3		RESISTOR 1K 1% .125W F TC=0+-100	24546	C4-1/8-T0-1001-F
A22R77	0757-0346	2		RESISTOR 10 1% .125W F TC=0+-100	24546	C4-1/8-T0-10R0-F
A22R78	0698-3150	6		RESISTOR 2.37K 1% .125W F TC=0+-100	24546	C4-1/8-T0-2371-F
A22R79	0698-3444	1		RESISTOR 316 1% .125W F TC=0+-100	24546	C4-1/8-T0-316R-F
A22R80	0757-0289	2	6	RESISTOR 13.3K 1% .125W F TC=0+-100	19701	MF4C1/8-T0-1332-F
A22R81	0757-0289	2		RESISTOR 13.3K 1% .125W F TC=0+-100	19701	MF4C1/8-T0-1332-F
A22R82	0757-0440	7		RESISTOR 7.5K 1% .125W F TC=0+-100	24546	C4-1/8-T0-7501-F
A22R83	0757-0401	0		RESISTOR 100 1% .125W F TC=0+-100	24546	C4-1/8-T0-101-F
A22R84	0757-0280	3		RESISTOR 1K 1% .125W F TC=0+-100	24546	C4-1/8-T0-1001-F
A22R85	0757-0279	0		RESISTOR 3.16K 1% .125W F TC=0+-100	24546	C4-1/8-T0-3161-F
A22R86	0757-0346	2		RESISTOR 10 1% .125W F TC=0+-100	24546	C4-1/8-T0-10R0-F
A22R87	0698-3444	1		RESISTOR 316 1% .125W F TC=0+-100	24546	C4-1/8-T0-316R-F
A22R88	2100-2522	1		RESISTOR-TRMR 10K 10% C SIDE-ADJ 1-TRN	30983	ET50X103
A22R89	0757-0440	7		RESISTOR 7.5K 1% .125W F TC=0+-100	24546	C4-1/8-T0-7501-F
A22R90	0757-0403	2	2	RESISTOR 121 1% .125W F TC=0+-100	24546	C4-1/8-T0-121R-F
A22R91	0757-0289	2		RESISTOR 13.3K 1% .125W F TC=0+-100	19701	MF4C1/8-T0-1332-F
A22R92	0757-0289	2		RESISTOR 13.3K 1% .125W F TC=0+-100	19701	MF4C1/8-T0-1332-F
A22R93*	0698-3153	9	2	RESISTOR 3.83K 1% .125W F TC=0+-100	24546	C4-1/8-T0-3831-F
A22R94	0698-3150	6		RESISTOR 2.37K 1% .125W F TC=0+-100	24546	C4-1/8-T0-2371-F
A22R95	0757-0346	2		RESISTOR 10 1% .125W F TC=0+-100	24546	C4-1/8-T0-10R0-F
A22R96	0698-3444	1		RESISTOR 316 1% .125W F TC=0+-100	24546	C4-1/8-T0-316R-F
A22R97	0757-0289	2		RESISTOR 13.3K 1% .125W F TC=0+-100	19701	MF4C1/8-T0-1332-F
A22R98	0757-0289	2		RESISTOR 13.3K 1% .125W F TC=0+-100	19701	MF4C1/8-T0-1332-F
A22R99	0757-0440	7		RESISTOR 7.5K 1% .125W F TC=0+-100	24546	C4-1/8-T0-7501-F
A22R100	0757-0403	2		RESISTOR 121 1% .125W F TC=0+-100	24546	C4-1/8-T0-121R-F
A22R101*	0698-3153	9		RESISTOR 3.83K 1% .125W F TC=0+-100	24546	C4-1/8-T0-3831-F
A22R102	0757-0346	2		RESISTOR 10 1% .125W F TC=0+-100	24546	C4-1/8-T0-10R0-F
A22R103	0757-0401	0		RESISTOR 100 1% .125W F TC=0+-100	24546	C4-1/8-T0-101-F
A22R104	0757-0401	0		RESISTOR 100 1% .125W F TC=0+-100	24546	C4-1/8-T0-101-F
A22R105	0698-3444	1		RESISTOR 316 1% .125W F TC=0+-100	24546	C4-1/8-T0-316R-F
A22R106	0757-0417	8	1	RESISTOR 562 1% .125W F TC=0+-100	24546	C4-1/8-T0-562R-F
A22R107*	0757-0199	3	1	RESISTOR 21.5K 1% .125W F TC=0+-100	24546	C4-1/8-T0-2152-F
A22R108	0698-3434	9	1	RESISTOR 34.8 1% .125W F TC=0+-100	24546	C4-1/8-T0-34R8-F
A22R109	0757-0400	9	1	RESISTOR 90.9 1% .125W F TC=0+-100	24546	C4-1/8-T0-90R9-F
A22R110	0757-0418	9	2	RESISTOR 619 1% .125W F TC=0+-100	24546	C4-1/8-T0-619R-F
A22R111	0698-3440	7	1	RESISTOR 196 1% .125W F TC=0+-100	24546	C4-1/8-T0-196R-F
A22R112	0757-0280	3		RESISTOR 1K 1% .125W F TC=0+-100	24546	C4-1/8-T0-1001-F
A22R113	0757-0280	3		RESISTOR 1K 1% .125W F TC=0+-100	24546	C4-1/8-T0-1001-F
A22R114	0698-3136	8		RESISTOR 17.8K 1% .125W F TC=0+-100	24546	C4-1/8-T0-1782-F
A22R115	0757-0401	0		RESISTOR 100 1% .125W F TC=0+-100	24546	C4-1/8-T0-101-F
A22R116	0757-0418	9		RESISTOR 619 1% .125W F TC=0+-100	24546	C4-1/8-T0-619R-F
A22R117	0757-0440	7		RESISTOR 7.5K 1% .125W F TC=0+-100	24546	C4-1/8-T0-7501-F
A22R118	0698-0085	0	1	RESISTOR 2.61K 1% .125W F TC=0+-100	24546	C4-1/8-T0-2611-F
A22R119	0698-3438	3	1	RESISTOR 147 1% .125W F TC=0+-100	24546	C4-1/8-T0-147R-F
A22R120	0757-0439	4	1	RESISTOR 6.81K 1% .125W F TC=0+-100	24546	C4-1/8-T0-6811-F
A22R121	2100-2633	5		RESISTOR-TRMR 1K 10% C SIDE-ADJ 1-TRN	30983	ET50X102
A22R122	0757-0420	3		RESISTOR 750 1% .125W F TC=0+-100	24546	C4-1/8-T0-751-F
A22R123	0757-0440	7		RESISTOR 7.5K 1% .125W F TC=0+-100	24546	C4-1/8-T0-7501-F
A22R124	0757-0447	4		RESISTOR 16.2K 1% .125W F TC=0+-100	24546	C4-1/8-T0-1622-F
A22R125	0757-0447	4		RESISTOR 16.2K 1% .125W F TC=0+-100	24546	C4-1/8-T0-1622-F
A22R126	0757-0465	6		RESISTOR 100K 1% .125W F TC=0+-100	24546	C4-1/8-T0-1003-F
A22R127	0757-0465	6		RESISTOR 100K 1% .125W F TC=0+-100	24546	C4-1/8-T0-1003-F
A22R128	0757-0465	6		RESISTOR 100K 1% .125W F TC=0+-100	24546	C4-1/8-T0-1003-F
A22R129	0698-0083	8		RESISTOR 1.96K 1% .125W F TC=0+-100	24546	C4-1/8-T0-1961-F
A22R130	0757-0279	0		RESISTOR 3.16K 1% .125W F TC=0+-100	24546	C4-1/8-T0-3161-F
A22R131	0757-0402	1	1	RESISTOR 110 1% .125W F TC=0+-100	24546	C4-1/8-T0-111-F
A22R132	0757-0438	3	1	RESISTOR 5.11K 1% .125W F TC=0+-100	24546	C4-1/8-T0-5111-F
A22R133	0698-7212	9	2	RESISTOR 100 1% .05W F TC=0+-100	24546	C3-1/8-TO-100R-F
A22R134	0698-7212	9		RESISTOR 100 1% .05W F TC=0+-100	24546	C3-1/8-TO-100R-F
A22TP1	0360-0535	0	10	TERMINAL TEST POINT PCB	00000	ORDER BY DESCRIPTION
A22TP2	0360-0535	0		TERMINAL TEST POINT PCB	00000	ORDER BY DESCRIPTION
A22TP3	0360-0535	0		TERMINAL TEST POINT PCB	00000	ORDER BY DESCRIPTION
A22TP4	0360-0535	0		TERMINAL TEST POINT PCB	00000	ORDER BY DESCRIPTION
A22TP5	0360-0535	0		TERMINAL TEST POINT PCB	00000	ORDER BY DESCRIPTION
A22TP6	0360-0535	0		TERMINAL TEST POINT PCB	00000	ORDER BY DESCRIPTION
A22TP7	0360-0535	0		TERMINAL TEST POINT PCB	00000	ORDER BY DESCRIPTION
A22TP8	0360-0535	0		TERMINAL TEST POINT PCB	00000	ORDER BY DESCRIPTION
A22TP9	0360-0535	0		TERMINAL TEST POINT PCB	00000	ORDER BY DESCRIPTION
A22TP10	0360-0535	0		TERMINAL TEST POINT PCB	00000	ORDER BY DESCRIPTION

See introduction to this section for ordering information
*Indicates factory selected value

Table 6-3. Replaceable Parts

Reference Designation	HP Part Number	C D	Qty	Description	Mfr Code	Mfr Part Number
A22U1	1826-0092	3	2	IC OP AMP GP DUAL TO-99 PKG	28480	1826-0092
A22U2	1826-0092	3		IC OP AMP GP DUAL TO-99 PKG	28480	1826-0092
A22VR1	1902-0901	5	1	DIODE-ZNR 5.4V 1% DO-35 PD=.4W TC=+.046%	28480	1902-0901
				A22 MISCELLANEOUS PARTS		
	08565-00131	2	1	COVER-LOG AMPLIFIER	28480	08565-00131

See introduction to this section for ordering information
*Indicates factory selected value

Table 6-3. Replaceable Parts

Reference Designation	HP Part Number	C D	Qty	Description	Mfr Code	Mfr Part Number
A23	08565-60174	9	1	BANDWIDTH FILTER NO. 2 ASSEMBLY	28480	08565-60174
A23C1	0160-2055	9	38	CAPACITOR-FXD .01UF +80-20% 100VDC CER	28480	0160-2055
A23C2	0160-0127	2	1	CAPACITOR-FXD 1UF +-20% 25VDC CER	28480	0160-0127
A23C3				NOT ASSIGNED		
A23C4	0160-2055	9		CAPACITOR-FXD .01UF +80-20% 100VDC CER	28480	0160-2055
A23C5	0160-2055	9		CAPACITOR-FXD .01UF +80-20% 100VDC CER	28480	0160-2055
A23C6	0160-2055	9		CAPACITOR-FXD .01UF +80-20% 100VDC CER	28480	0160-2055
A23C7	0160-2055	9		CAPACITOR-FXD .01UF +80-20% 100VDC CER	28480	0160-2055
A23C8	0160-2207	3	2	CAPACITOR-FXD 300PF +-5% 300VDC MICA	28480	0160-2207
A23C9	0160-2055	9		CAPACITOR-FXD .01UF +80-20% 100VDC CER	28480	0160-2055
A23C10	0160-2055	9		CAPACITOR-FXD .01UF +80-20% 100VDC CER	28480	0160-2055
A23C11	0160-2055	9		CAPACITOR-FXD .01UF +80-20% 100VDC CER	28480	0160-2055
A23C12	0160-2055	9		CAPACITOR-FXD .01UF +80-20% 100VDC CER	28480	0160-2055
A23C13	0160-3456	6	3	CAPACITOR-FXD 1000PF +-10% 1KVDC CER	28480	0160-3456
A23C14	0160-2250	6	2	CAPACITOR-FXD 5.1PF +-.25PF 500VDC CER	28480	0160-2250
A23C15	0121-0059	7	2	CAPACITOR-V TRMR-CER 2-8PF 350V PC-MTG	52763	304324 2/8PF NPO
A23C16*	0140-0199	6	2	CAPACITOR-FXD 240PF +-5% 300VDC MICA	72136	DM15F241J0300WV1CR
A23C17	0160-2055	9		CAPACITOR-FXD .01UF +80-20% 100VDC CER	28480	0160-2055
A23C18	0160-2055	9		CAPACITOR-FXD .01UF +80-20% 100VDC CER	28480	0160-2055
A23C19	0160-2055	9		CAPACITOR-FXD .01UF +80-20% 100VDC CER	28480	0160-2055
A23C20*	0140-0199	6		CAPACITOR-FXD 240PF +-5% 300VDC MICA	72136	DM15F241J0300WV1CR
A23C21	0160-0437	7	2	CAPACITOR-FXD 12PF +-5% 500VDC CER	28480	0160-0437
A23C22	0160-4084	8	3	CAPACITOR-FXD .1UF +-20% 50VDC CER	28480	0160-4084
A23C23	0121-0036	0	2	CAPACITOR-V TRMR-CER 5.5-18PF 350V	52763	304324 5.5/18PF NPO
A23C24	0160-2055	9		CAPACITOR-FXD .01UF +80-20% 100VDC CER	28480	0160-2055
A23C25	0121-0446	6	2	CAPACITOR-V TRMR-CER 4.5-20PF 160V	28480	0121-0446
A23C26	0160-2055	9		CAPACITOR-FXD .01UF +80-20% 100VDC CER	28480	0160-2055
A23C27	0160-2055	9		CAPACITOR-FXD .01UF +80-20% 100VDC CER	28480	0160-2055
A23C28	0160-2055	9		CAPACITOR-FXD .01UF +80-20% 100VDC CER	28480	0160-2055
A23C29	0160-3456	6		CAPACITOR-FXD 1000PF +-10% 1KVDC CER	28480	0160-3456
A23C30	0160-2055	9		CAPACITOR-FXD .01UF +80-20% 100VDC CER	28480	0160-2055
A23C31	0160-4298	6	1	CAPACITOR-FXD 4700PF +-20% 250VDC CER	56289	C067F251H472MS22-CDH
A23C32	0160-4084	8		CAPACITOR-FXD .1UF +-20% 50VDC CER	28480	0160-4084
A23C33	0160-2207	3		CAPACITOR-FXD 300PF +-5% 300VDC MICA	28480	0160-2207
A23C34	0160-2055	9		CAPACITOR-FXD .01UF +80-20% 100VDC CER	28480	0160-2055
A23C35	0160-2055	9		CAPACITOR-FXD .01UF +80-20% 100VDC CER	28480	0160-2055
A23C36	0160-2055	9		CAPACITOR-FXD .01UF +80-20% 100VDC CER	28480	0160-2055
A23C37	0160-2250	6		CAPACITOR-FXD 5.1PF +-.25PF 500VDC CER	28480	0160-2250
A23C38	0121-0059	7		CAPACITOR-V TRMR-CER 2-8PF 350V PC-MTG	52763	304324 2/8PF NPO
A23C39				NOT ASSIGNED		
A23C40	0160-2055	9		CAPACITOR-FXD .01UF +80-20% 100VDC CER	28480	0160-2055
A23C41	0160-3456	6		CAPACITOR-FXD 1000PF +-10% 1KVDC CER	28480	0160-3456
A23C42	0160-2055	9		CAPACITOR-FXD .01UF +80-20% 100VDC CER	28480	0160-2055
A23C43*	0160-3046	0	2	CAPACITOR-FXD 250PF +-1% 100VDC MICA	28480	0160-3046
A23C44	0160-0437	7		CAPACITOR-FXD 12PF +-5% 500VDC CER	28480	0160-0437
A23C45	0121-0036	0		CAPACITOR-V TRMR-CER 5.5-18PF 350V	52763	304324 5.5/18PF NPO
A23C46	0160-4084	8		CAPACITOR-FXD .1UF +-20% 50VDC CER	28480	0160-4084
A23C47	0160-2055	9		CAPACITOR-FXD .01UF +80-20% 100VDC CER	28480	0160-2055
A23C48	0160-2055	9		CAPACITOR-FXD .01UF +80-20% 100VDC CER	28480	0160-2055
A23C49	0160-2055	9		CAPACITOR-FXD .01UF +80-20% 100VDC CER	28480	0160-2055
A23C50	0160-2055	9		CAPACITOR-FXD .01UF +80-20% 100VDC CER	28480	0160-2055
A23C51	0160-2055	9		CAPACITOR-FXD .01UF +80-20% 100VDC CER	28480	0160-2055
A23C52	0160-2055	9		CAPACITOR-FXD .01UF +80-20% 100VDC CER	28480	0160-2055
A23C53	0160-2055	9		CAPACITOR-FXD .01UF +80-20% 100VDC CER	28480	0160-2055
A23C54	0121-0446	6		CAPACITOR-V TRMR-CER 4.5-20PF 160V	28480	0121-0446
A23C55	0160-2055	9		CAPACITOR-FXD .01UF +80-20% 100VDC CER	28480	0160-2055
A23C56- A23C59				NOT ASSIGNED		
A23C60	0160-2055	9		CAPACITOR-FXD .01UF +80-20% 100VDC CER	28480	0160-2055
A23C61	0160-2055	9		CAPACITOR-FXD .01UF +80-20% 100VDC CER	28480	0160-2055
A23C62	0160-2055	9		CAPACITOR-FXD .01UF +80-20% 100VDC CER	28480	0160-2055
A23C63	0160-2055	9		CAPACITOR-FXD .01UF +80-20% 100VDC CER	28480	0160-2055
A23C64*	0160-3046	0		CAPACITOR-FXD 250PF +-1% 100VDC MICA	28480	0160-3046
A23C65	0160-2055	9		CAPACITOR-FXD .01UF +80-20% 100VDC CER	28480	0160-2055
A23C66	0160-2055	9		CAPACITOR-FXD .01UF +80-20% 100VDC CER	28480	0160-2055
A23C67	0160-2055	9		CAPACITOR-FXD .01UF +80-20% 100VDC CER	28480	0160-2055
A23C68	0160-2258	4	1	CAPACITOR-FXD 11PF +-5% 500VDC CER 0+-30	28480	0160-2258
A23C69	0160-2055	9		CAPACITOR-FXD .01UF +80-20% 100VDC CER	28480	0160-2055
A23C70- A23C72				NOT ASSIGNED		
A23C73	0121-0452	4	2	CAPACITOR-V TRMR-AIR 1.3-5.4PF 175V	74970	187-0103-020

See introduction to this section for ordering information
*Indicates factory selected value

Table 6-3. Replaceable Parts

Reference Designation	HP Part Number	C D	Qty	Description	Mfr Code	Mfr Part Number
A23C74	0121-0452	4		CAPACITOR-V TRMR-AIR 1.3-5.4PF 175V	74970	187-0103-028
A23CR1	1901-0047	8	6	DIODE-SWITCHING 20V 75MA 10NS	28480	1901-0047
A23CR2	1901-0047	8		DIODE-SWITCHING 20V 75MA 10NS	28480	1901-0047
A23CR3	1901-1070	9	5	DIODE-PIN 110V	28480	1901-1070
A23CR4	1901-1070	9		DIODE-PIN 110V	28480	1901-1070
A23CR5	1901-1070	9		DIODE-PIN 110V	28480	1901-1070
A23CR6	1901-0535	9	4	DIODE-SM SIG SCHOTTKY	28480	1901-0535
A23CR7				NOT ASSIGNED		
A23CR8	1901-0535	9		DIODE-SM SIG SCHOTTKY	28480	1901-0535
A23CR9	1901-0047	8		DIODE-SWITCHING 20V 75MA 10NS	28480	1901-0047
A23CR10	1901-0047	8		DIODE-SWITCHING 20V 75MA 10NS	28480	1901-0047
A23CR11	1901-1070	9		DIODE-PIN 110V	28480	1901-1070
A23CR12	1901-1070	9		DIODE-PIN 110V	28480	1901-1070
A23CR13	1901-0047	8		DIODE-SWITCHING 20V 75MA 10NS	28480	1901-0047
A23CR14	1901-0535	9		DIODE-SM SIG SCHOTTKY	28480	1901-0535
A23CR15				NOT ASSIGNED		
A23CR16	1901-0047	8		DIODE-SWITCHING 20V 75MA 10NS	28480	1901-0047
A23CR17	1901-0535	9		DIODE-SM SIG SCHOTTKY	28480	1901-0535
A23E1				NOT ASSIGNED		
A23E2	9170-0029	3	9	CORE-SHIELDING BEAD	28480	9170-0029
A23E3	9170-0029	3		CORE-SHIELDING BEAD	28480	9170-0029
A23E4	9170-0029	3		CORE-SHIELDING BEAD	28480	9170-0029
A23E5	9170-0029	3		CORE-SHIELDING BEAD	28480	9170-0029
A23E6	9170-0029	3		CORE-SHIELDING BEAD	28480	9170-0029
A23E7	9170-0029	3		CORE-SHIELDING BEAD	28480	9170-0029
A23E8	9170-0029	3		CORE-SHIELDING BEAD	28480	9170-0029
A23E9	9170-0029	3		CORE-SHIELDING BEAD	28480	9170-0029
A23E10	9170-0029	3		CORE-SHIELDING BEAD	28480	9170-0029
A23L1	9140-0112	2	1	INDUCTOR RF-CH-MLD 4.7UH 10%	28480	9140-0112
A23L2	9100-1641	0	1	INDUCTOR RF-CH-MLD 240UH 5% .166DX.385LG	28480	9100-1641
A23L3	9140-0114	4	2	INDUCTOR RF-CH-MLD 10UH 10% .166DX.385LG	28480	9140-0114
A23L4	9100-1624	9	3	INDUCTOR RF-CH-MLD 30UH 5% .166DX.385LG	28480	9100-1624
A23L5	9140-0179	1	2	INDUCTOR RF-CH-MLD 22UH 10% .166DX.385LG	28480	9140-0179
A23L6	9140-0434	1	2	INDUCTOR 385NH 15% .354DX.906LG Q=150	08588	QL-1623
A23L7	9140-0098	3	2	INDUCTOR RF-CH-MLD 2.2UH 10%	28480	9140-0098
A23L8	9140-0178	0	1	INDUCTOR RF-CH-MLD 12UH 10% .166DX.385LG	28480	9140-0178
A23L9	9100-1619	2	2	INDUCTOR RF-CH-MLD 6.8UH 10%	28480	9100-1619
A23L10	9140-0114	4		INDUCTOR RF-CH-MLD 10UH 10% .166DX.385LG	28480	9140-0114
A23L11	9100-1624	9		INDUCTOR RF-CH-MLD 30UH 5% .166DX.385LG	28480	9100-1624
A23L12	9140-0179	1		INDUCTOR RF-CH-MLD 22UH 10% .166DX.385LG	28480	9140-0179
A23L13	9140-0098	3		INDUCTOR RF-CH-MLD 2.2UH 10%	28480	9140-0098
A23L14	9100-1620	5	1	INDUCTOR RF-CH-MLD 15UH 10% .166DX.385LG	28480	9100-1620
A23L15	9140-0434	1		INDUCTOR 385NH 15% .354DX.906LG Q=150	08588	QL-1623
A23L16	9140-0144	0	2	INDUCTOR RF-CH-MLD 4.7UH 10% .105DX.26LG	28480	9140-0144
A23L17	9100-1624	9		INDUCTOR RF-CH-MLD 30UH 5% .166DX.385LG	28480	9100-1624
A23L18	9100-1619	2		INDUCTOR RF-CH-MLD 6.8UH 10%	28480	9100-1619
A23L19	9140-0144	0		INDUCTOR RF-CH-MLD 4.7UH 10% .105DX.26LG	28480	9140-0144
A23MP1	08559-00025	5	1	BAFFLE-INDUCTOR	28480	08559-00025
A23Q1	1854-0345	8	1	TRANSISTOR NPN 2N5179 SI TO-72 PD=200MW	04713	2N5179
A23Q2	1854-0404	0	2	TRANSISTOR NPN SI TO-18 PD=360MW	28480	1854-0404
A23Q3	1853-0007	7	5	TRANSISTOR PNP 2N3251 SI TO-18 PD=360MW	04713	2N3251
A23Q4	1853-0007	7		TRANSISTOR PNP 2N3251 SI TO-18 PD=360MW	04713	2N3251
A23Q5	1855-0267	5	2	TRANSISTOR J-FET N-CHAN D-MODE TO-92 SI	28480	1855-0267
A23Q6	1853-0007	7		TRANSISTOR PNP 2N3251 SI TO-18 PD=360MW	04713	2N3251
A23Q7	1854-0404	0		TRANSISTOR NPN SI TO-18 PD=360MW	28480	1854-0404
A23Q8	1853-0007	7		TRANSISTOR PNP 2N3251 SI TO-18 PD=360MW	04713	2N3251
A23Q9	1855-0267	5		TRANSISTOR J-FET N-CHAN D-MODE TO-92 SI	28480	1855-0267
A23Q10	1853-0007	7		TRANSISTOR PNP 2N3251 SI TO-18 PD=360MW	04713	2N3251
A23R1	0757-0444	1	3	RESISTOR 12.1K 1% .125W F TC=0+-100	24546	C4-1/8-T0-1212-F
A23R2	0698-3156	2	1	RESISTOR 14.7K 1% .125W F TC=0+-100	24546	C4-1/8-T0-1472-F
A23R3*	0698-3438	3	1	RESISTOR 147 1% .125W F TC=0+-100	24546	C4-1/8-T0-147R-F
A23R4	0757-0442	9	8	RESISTOR 10K 1% .125W F TC=0+-100	24546	C4-1/8-T0-1002-F
A23R5	0757-0405	4	1	RESISTOR 162 1% .125W F TC=0+-100	24546	C4-1/8-T0-162R-F
A23R6	0698-3431	6	1	RESISTOR 23.7 1% .125W F TC=0+-100	03888	PME55-1/8-T0-23R7-F
A23R7*	0698-8821	8	1	RESISTOR 5.62 1% .125W F TC=0+-100	28480	0698-8821
A23R8	0757-0401	0	3	RESISTOR 100 1% .125W F TC=0+-100	24546	C4-1/8-T0-101-F
A23R9	0757-0439	4	1	RESISTOR 6.81K 1% .125W F TC=0+-100	24546	C4-1/8-T0-6811-F
A23R10	0757-1094	9	1	RESISTOR 1.47K 1% .125W F TC=0+-100	24546	C4-1/8-T0-1471-F
A23R11	0757-0440	7	1	RESISTOR 7.5K 1% .125W F TC=0+-100	24546	C4-1/8-T0-7501-F
A23R12	0757-0447	4	1	RESISTOR 16.2K 1% .125W F TC=0+-100	24546	C4-1/8-T0-1622-F
A23R13	0698-0082	7	1	RESISTOR 464 1% .125W F TC=0+-100	24546	C4-1/8-T0-4640-F
A23R14	0757-0346	2	4	RESISTOR 10 1% .125W F TC=0+-100	24546	C4-1/8-T0-10R0-F
A23R15	0698-3440	7	2	RESISTOR 196 1% .125W F TC=0+-100	24546	C4-1/8-T0-196R-F

See introduction to this section for ordering information
*Indicates factory selected value

Table 6-3. Replaceable Parts

Reference Designation	HP Part Number	C D	Qty	Description	Mfr Code	Mfr Part Number
A23R16	0757-0419	0	2	RESISTOR 681 1% .125W F TC=0+-100	24546	C4-1/8-T0-681R-F
A23R17	0698-3442	9	2	RESISTOR 237 1% .125W F TC=0+-100	24546	C4-1/8-T0-237R-F
A23R18	0698-3154	0		RESISTOR 4.22K 1% .125W F TC=0+-100	24546	C4-1/8-T0-4221-F
A23R19*	0698-3154	0	3	RESISTOR 4.22K 1% .125W F TC=0+-100	24546	C4-1/8-T0-4221-F
A23R20	0757-0442	9		RESISTOR 10K 1% .125W F TC=0+-100	24546	C4-1/8-T0-1002-F
A23R21	0757-0442	9		RESISTOR 10K 1% .125W F TC=0+-100	24546	C4-1/8-T0-1002-F
A23R22	0757-0442	9		RESISTOR 10K 1% .125W F TC=0+-100	24546	C4-1/8-T0-1002-F
A23R23*	0757-0441	8	2	RESISTOR 8.25K 1% .125W F TC=0+-100	24546	C4-1/8-T0-8251-F
A23R24*	0698-8827	4	1	RESISTOR 1M 1% .125W F TC=0+-100	28480	0698-8827
A23R25*	0757-0465	6	2	RESISTOR 100K 1% .125W F TC=0+-100	24546	C4-1/8-T0-1003-F
A23R26	2100-3163	8	1	RESISTOR-TRMR 1M 20% C SIDE-ADJ 17-TRN	02111	43P105
A23R27	0757-0444	1		RESISTOR 12.1K 1% .125W F TC=0+-100	24546	C4-1/8-T0-1212-F
A23R28	0757-0443	0	2	RESISTOR 11K 1% .125W F TC=0+-100	24546	C4-1/8-T0-1102-F
A23R29	0698-0083	8	2	RESISTOR 1.96K 1% .125W F TC=0+-100	24546	C4-1/8-T0-1961-F
A23R30	0757-0402	1	1	RESISTOR 110 1% .125W F TC=0+-100	24546	C4-1/8-T0-111-F
A23R31	2100-3052	4	1	RESISTOR-TRMR 50 10% C SIDE-ADJ 17-TRN	02111	43P500
A23R32*	0757-0465	6		RESISTOR 100K 1% .125W F TC=0+-100	24546	C4-1/8-T0-1003-F
A23R33	0757-0442	9		RESISTOR 10K 1% .125W F TC=0+-100	24546	C4-1/8-T0-1002-F
A23R34	0757-0199	3	1	RESISTOR 21.5K 1% .125W F TC=0+-100	24546	C4-1/8-T0-2152-F
A23R35	0757-0288	1	1	RESISTOR 9.09K 1% .125W F TC=0+-100	19701	MF4C1/8-T0-9091-F
A23R36	0698-0083	8		RESISTOR 1.96K 1% .125W F TC=0+-100	24546	C4-1/8-T0-1961-F
A23R37	0757-0416	7	2	RESISTOR 511 1% .125W F TC=0+-100	24546	C4-1/8-T0-511R-F
A23R38	0698-3441	8	1	RESISTOR 215 1% .125W F TC=0+-100	24546	C4-1/8-T0-215R-F
A23R39	0757-0419	0		RESISTOR 681 1% .125W F TC=0+-100	24546	C4-1/8-T0-681R-F
A23R40	0698-3442	9		RESISTOR 237 1% .125W F TC=0+-100	24546	C4-1/8-T0-237R-F
A23R41	0698-3154	0		RESISTOR 4.22K 1% .125W F TC=0+-100	24546	C4-1/8-T0-4221-F
A23R42	0757-0442	9		RESISTOR 10K 1% .125W F TC=0+-100	24546	C4-1/8-T0-1002-F
A23R43*	0698-3155	1	1	RESISTOR 4.64K 1% .125W F TC=0+-100	24546	C4-1/8-T0-4641-F
A23R44	0757-0442	9		RESISTOR 10K 1% .125W F TC=0+-100	24546	C4-1/8-T0-1002-F
A23R45	0757-0401	0		RESISTOR 100 1% .125W F TC=0+-100	24546	C4-1/8-T0-101-F
A23R46	0757-0401	0		RESISTOR 100 1% .125W F TC=0+-100	24546	C4-1/8-T0-101-F
A23R47	0757-0346	2		RESISTOR 10 1% .125W F TC=0+-100	24546	C4-1/8-T0-10R0-F
A23R48*	0757-0441	8		RESISTOR 8.25K 1% .125W F TC=0+-100	24546	C4-1/8-T0-8251-F
A23R49	0757-0444	1		RESISTOR 12.1K 1% .125W F TC=0+-100	24546	C4-1/8-T0-1212-F
A23R50	0757-0346	2		RESISTOR 10 1% .125W F TC=0+-100	24546	C4-1/8-T0-10R0-F
A23R51	0757-0346	2		RESISTOR 10 1% .125W F TC=0+-100	24546	C4-1/8-T0-10R0-F
A23R52	0757-0443	0		RESISTOR 11K 1% .125W F TC=0+-100	24546	C4-1/8-T0-1102-F
A23R53	0698-3440	7		RESISTOR 196 1% .125W F TC=0+-100	24546	C4-1/8-T0-196R-F
A23R54	0757-0416	7		RESISTOR 511 1% .125W F TC=0+-100	24546	C4-1/8-T0-511R-F
A23R55	0757-0442	9		RESISTOR 10K 1% .125W F TC=0+-100	24546	C4-1/8-T0-1002-F
A23R56*	0757-0422	5	1	RESISTOR 909 1% .125W F TC=0+-100	24546	C4-1/8-T0-909R-F
A23R57	0757-0180	2	2	RESISTOR 31.6 1% .125W F TC=0+-100	28480	0757-0180
A23R58	0698-3152	8	1	RESISTOR 3.48K 1% .125W F TC=0+-100	24546	C4-1/8-T0-3481-F
A23R59	0757-0180	2		RESISTOR 31.6 1% .125W F TC=0+-100	28480	0757-0180
A23R60	0698-3153	9	1	RESISTOR 3.83K 1% .125W F TC=0+-100	24546	C4-1/8-T0-3831-F
A23TP1	0360-1788	7	4	CONNECTOR-SGL CONT PIN .045-IN-BSC-SZ SQ	28480	0360-1788
A23TP2	0360-1788	7		CONNECTOR-SGL CONT PIN .045-IN-BSC-SZ SQ	28480	0360-1788
A23TP3	1251-0600	0	7	CONNECTOR-SGL CONT PIN 1.14-MM-BSC-SZ SQ	28480	1251-0600
A23TP4	0360-1788	7		CONNECTOR-SGL CONT PIN .045-IN-BSC-SZ SQ	28480	0360-1788
A23TP5	0360-1788	7		CONNECTOR-SGL CONT PIN .045-IN-BSC-SZ SQ	28480	0360-1788
A23TP6	1251-0600	0		CONNECTOR-SGL CONT PIN 1.14-MM-BSC-SZ SQ	28480	1251-0600
A23TP7				NOT ASSIGNED		
A23TP8	1251-0600	0		CONNECTOR-SGL CONT PIN 1.14-MM-BSC-SZ SQ	28480	1251-0600
A23TP9	1251-0600	0		CONNECTOR-SGL CONT PIN 1.14-MM-BSC-SZ SQ	28480	1251-0600
A23TP10	1251-0600	0		CONNECTOR-SGL CONT PIN 1.14-MM-BSC-SZ SQ	28480	1251-0600
A23TP11	1251-0600	0		CONNECTOR-SGL CONT PIN 1.14-MM-BSC-SZ SQ	28480	1251-0600
A23TP12	1251-0600	0		CONNECTOR-SGL CONT PIN 1.14-MM-BSC-SZ SQ	28480	1251-0600
A23VR1	1902-0048	1	1	DIODE-ZNR 6.81V 5% DO-35 PD=.4W	28480	1902-0048
A23Y1,Y2	0410-0589	1	1	CRYSTAL-21.4 MHZ (STANDARD) MATCHED SET OF FIVE (INCL A27Y1,Y2/A25Y1	28480	0410-0589
A23Y1,Y2	0410-0450	5	1	CRYSTAL-21.4 MHZ (OPTION 002) MATCHED SET OF FOUR (INCL A27Y1, Y2)	28480	0410-0450
				A23 MISCELLANEOUS PARTS		
	0403-0026	6	1	PLUG-HOLE BDR-HD FOR .187-D-HOLE NYL	02768	207-120241-03-0101
	5001-5828	9	1	COVER-BW FILTER	28480	5001-5828

See introduction to this section for ordering information
*Indicates factory selected value

Table 6-3. Replaceable Parts

Reference Designation	HP Part Number	C D	Qty	Description	Mfr Code	Mfr Part Number
A24	08565-60104	5	1	STEP GAIN AMPLIFIER/OSCILLATOR ASSEMBLY (STANDARD)	28480	08565-60104
A24C1	0160-2055	9	34	CAPACITOR-FXD .01UF +80-20% 100VDC CER	28480	0160-2055
A24C2	0160-2055	9		CAPACITOR-FXD .01UF +80-20% 100VDC CER	28480	0160-2055
A24C3	0160-2055	9		CAPACITOR-FXD .01UF +80-20% 100VDC CER	28480	0160-2055
A24C4	0160-2055	9		CAPACITOR-FXD .01UF +80-20% 100VDC CER	28480	0160-2055
A24C5	0160-2055	9		CAPACITOR-FXD .01UF +80-20% 100VDC CER	28480	0160-2055
A24C6	0160-2055	9		CAPACITOR-FXD .01UF +80-20% 100VDC CER	28480	0160-2055
A24C7	0160-2055	9		CAPACITOR-FXD .01UF +80-20% 100VDC CER	28480	0160-2055
A24C8	0160-2055	9		CAPACITOR-FXD .01UF +80-20% 100VDC CER	28480	0160-2055
A24C9	0160-2055	9		CAPACITOR-FXD .01UF +80-20% 100VDC CER	28480	0160-2055
A24C10	0160-2055	9		CAPACITOR-FXD .01UF +80-20% 100VDC CER	28480	0160-2055
A24C11	0160-2055	9		CAPACITOR-FXD .01UF +80-20% 100VDC CER	28480	0160-2055
A24C12	0160-2055	9		CAPACITOR-FXD .01UF +80-20% 100VDC CER	28480	0160-2055
A24C13	0160-2055	9		CAPACITOR-FXD .01UF +80-20% 100VDC CER	28480	0160-2055
A24C14	0160-2055	9		CAPACITOR-FXD .01UF +80-20% 100VDC CER	28480	0160-2055
A24C15				NOT ASSIGNED		
A24C16	0160-2055	9		CAPACITOR-FXD .01UF +80-20% 100VDC CER	28480	0160-2055
A24C17	0160-2055	9		CAPACITOR-FXD .01UF +80-20% 100VDC CER	28480	0160-2055
A24C18	0160-2055	9		CAPACITOR-FXD .01UF +80-20% 100VDC CER	28480	0160-2055
A24C19	0160-2055	9		CAPACITOR-FXD .01UF +80-20% 100VDC CER	28480	0160-2055
A24C20	0160-2055	9		CAPACITOR-FXD .01UF +80-20% 100VDC CER	28480	0160-2055
A24C21	0160-2055	9		CAPACITOR-FXD .01UF +80-20% 100VDC CER	28480	0160-2055
A24C22	0160-2055	9		CAPACITOR-FXD .01UF +80-20% 100VDC CER	28480	0160-2055
A24C23	0160-2055	9		CAPACITOR-FXD .01UF +80-20% 100VDC CER	28480	0160-2055
A24C24	0160-2199	2	1	CAPACITOR-FXD 30PF +-5% 300VDC MICA	28480	0160-2199
A24C25*	0160-2307	4	1	CAPACITOR-FXD 47PF +-5% 300VDC MICA	28480	0160-2307
A24C26	0160-2055	9		CAPACITOR-FXD .01UF +80-20% 100VDC CER	28480	0160-2055
A24C27	0160-2055	9		CAPACITOR-FXD .01UF +80-20% 100VDC CER	28480	0160-2055
A24C28	0160-2055	9		CAPACITOR-FXD .01UF +80-20% 100VDC CER	28480	0160-2055
A24C29	0160-2055	9		CAPACITOR-FXD .01UF +80-20% 100VDC CER	28480	0160-2055
A24C30	0180-0197	8	1	CAPACITOR-FXD 2.2UF+-10% 20VDC TA	56289	150D225X9020A2
A24C31	0160-2055	9		CAPACITOR-FXD .01UF +80-20% 100VDC CER	28480	0160-2055
A24C32	0140-0198	5	1	CAPACITOR-FXD 200PF +-5% 300VDC MICA	72136	DM15F201J0300WV1CR
A24C33	0160-2204	0	1	CAPACITOR-FXD 100PF +-5% 300VDC MICA	28480	0160-2204
A24C34*	0160-2264	2	1	CAPACITOR-FXD 20PF +-5% 500VDC CER 0+-30	28480	0160-2264
A24C35	0121-0036	0	1	CAPACITOR-V TRMR-CER 5.5-18PF 350V	52763	304324 5.5/18PF NPO
A24C36	0160-2055	9		CAPACITOR-FXD .01UF +80-20% 100VDC CER	28480	0160-2055
A24C37	0160-2055	9		CAPACITOR-FXD .01UF +80-20% 100VDC CER	28480	0160-2055
A24C38	0160-2055	9		CAPACITOR-FXD .01UF +80-20% 100VDC CER	28480	0160-2055
A24C39	0160-2055	9		CAPACITOR-FXD .01UF +80-20% 100VDC CER	28480	0160-2055
A24C40	0160-2055	9		CAPACITOR-FXD .01UF +80-20% 100VDC CER	28480	0160-2055
A24C41	0160-2055	9		CAPACITOR-FXD .01UF +80-20% 100VDC CER	28480	0160-2055
A24C42	0160-2055	9		CAPACITOR-FXD .01UF +80-20% 100VDC CER	28480	0160-2055
A24CR1	1901-0040	1	3	DIODE-SWITCHING 30V 50MA 2NS DO-35	28480	1901-0040
A24CR2	1901-0040	1		DIODE-SWITCHING 30V 50MA 2NS DO-35	28480	1901-0040
A24CR3	1901-1070	9	4	DIODE-PIN 110V	28480	1901-1070
A24CR4	1901-1070	9		DIODE-PIN 110V	28480	1901-1070
A24CR5	1901-1070	9		DIODE-PIN 110V	28480	1901-1070
A24CR6	1901-1070	9		DIODE-PIN 110V	28480	1901-1070
A24CR7	1901-0040	1		DIODE-SWITCHING 30V 50MA 2NS DO-35	28480	1901-0040
A24E1	9170-0029	3	11	CORE-SHIELDING BEAD	28480	9170-0029
A24E2	9170-0029	3		CORE-SHIELDING BEAD	28480	9170-0029
A24E3	9170-0029	3		CORE-SHIELDING BEAD	28480	9170-0029
A24E4	9170-0029	3		CORE-SHIELDING BEAD	28480	9170-0029
A24E5	9170-0029	3		CORE-SHIELDING BEAD	28480	9170-0029
A24E6	9170-0029	3		CORE-SHIELDING BEAD	28480	9170-0029
A24E7	9170-0029	3		CORE-SHIELDING BEAD	28480	9170-0029
A24E8	9170-0029	3		CORE-SHIELDING BEAD	28480	9170-0029
A24E9	9170-0029	3		CORE-SHIELDING BEAD	28480	9170-0029
A24E10	9170-0029	3		CORE-SHIELDING BEAD	28480	9170-0029
A24E11	9170-0029	3		CORE-SHIELDING BEAD	28480	9170-0029
A24L1	9140-0112	2	2	INDUCTOR RF-CH-MLD 4.7UH 10%	28480	9140-0112
A24L2	9140-0179	1	6	INDUCTOR RF-CH-MLD 22UH 10% .166DX.385LG	28480	9140-0179
A24L3	9140-0112	2		INDUCTOR RF-CH-MLD 4.7UH 10%	28480	9140-0112
A24L4	9140-0144	0	1	INDUCTOR RF-CH-MLD 4.7UH 10% .105DX.26LG	28480	9140-0144
A24L5	9140-0179	1		INDUCTOR RF-CH-MLD 22UH 10% .166DX.385LG	28480	9140-0179
A24L6	9140-0179	1		INDUCTOR RF-CH-MLD 22UH 10% .166DX.385LG	28480	9140-0179
A24L7	9140-0179	1		INDUCTOR RF-CH-MLD 22UH 10% .166DX.385LG	28480	9140-0179
A24L8	9140-0179	1		INDUCTOR RF-CH-MLD 22UH 10% .166DX.385LG	28480	9140-0179
A24L9	9140-0121	3	1	INDUCTOR RF-CH-MLD 1.8UH 10%	28480	9140-0121
A24L10	9140-0096	1	1	INDUCTOR RF-CH-MLD 1UH 10% .166DX.385LG	28480	9140-0096

See introduction to this section for ordering information
*Indicates factory selected value

Table 6-3. Replaceable Parts

Reference Designation	HP Part Number	C D	Qty	Description	Mfr Code	Mfr Part Number
A24L11*	9100-1615	8	1	INDUCTOR RF-CH-MLD 1.2UH 10%	28480	9100-1615
A24L12	9140-0179	1	1	INDUCTOR RF-CH-MLD 22UH 10% .166DX.385LG	28480	9140-0179
A24Q1	1853-0015	7	1	TRANSISTOR PNP SI PD=200MW FT=500MHZ	28480	1853-0015
A24Q2	1854-0345	8	4	TRANSISTOR NPN 2N5179 SI TO-72 PD=200MW	04713	2N5179
A24Q3	1853-0281	9	4	TRANSISTOR PNP 2N2907A SI TO-18 PD=400MW	04713	2N2907A
A24Q4	1854-0345	8		TRANSISTOR NPN 2N5179 SI TO-72 PD=200MW	04713	2N5179
A24Q5	1853-0281	9		TRANSISTOR PNP 2N2907A SI TO-18 PD=400MW	04713	2N2907A
A24Q6	1854-0345	8		TRANSISTOR NPN 2N5179 SI TO-72 PD=200MW	04713	2N5179
A24Q7	1854-0019	3	6	TRANSISTOR NPN SI TO-18 PD=360MW	28480	1854-0019
A24Q8	1853-0281	9		TRANSISTOR PNP 2N2907A SI TO-18 PD=400MW	04713	2N2907A
A24Q9	1853-0281	9		TRANSISTOR PNP 2N2907A SI TO-18 PD=400MW	04713	2N2907A
A24Q10	1854-0019	3		TRANSISTOR NPN SI TO-18 PD=360MW	28480	1854-0019
A24Q11	1854-0345	8		TRANSISTOR NPN 2N5179 SI TO-72 PD=200MW	04713	2N5179
A24Q12	1854-0019	3		TRANSISTOR NPN SI TO-18 PD=360MW	28480	1854-0019
A24Q13	1854-0019	3		TRANSISTOR NPN SI TO-18 PD=360MW	28480	1854-0019
A24Q14	1854-0019	3		TRANSISTOR NPN SI TO-18 PD=360MW	28480	1854-0019
A24Q15	1854-0019	3		TRANSISTOR NPN SI TO-18 PD=360MW	28480	1854-0019
A24R1	2100-3054	6	2	RESISTOR-TRMR 50K 10% C SIDE-ADJ 17-TRN	02111	43P503
A24R2	2100-3061	5	2	RESISTOR-TRMR 500K 10% C SIDE-ADJ 17-TRN	02111	43P504
A24R3	2100-3054	6		RESISTOR-TRMR 50K 10% C SIDE-ADJ 17-TRN	02111	43P503
A24R4	2100-3061	5		RESISTOR-TRMR 500K 10% C SIDE-ADJ 17-TRN	02111	43P504
A24R5	2100-3103	6	1	RESISTOR-TRMR 10K 10% C SIDE-ADJ 17-TRN	02111	43P103
A24R6	2100-3056	8	1	RESISTOR-TRMR 5K 10% C SIDE-ADJ 17-TRN	02111	43P502
A24R7				NOT ASSIGNED		
A24R8	0757-0288	1	3	RESISTOR 9.09K 1% .125W F TC=0+-100	19701	MF4C1/8-T0-9091-F
A24R9	0698-3260	9	3	RESISTOR 464K 1% .125W F TC=0+-100	28480	0698-3260
A24R10				NOT ASSIGNED		
A24R11	0757-0279	0	3	RESISTOR 3.16K 1% .125W F TC=0+-100	24546	C4-1/8-T0-3161-F
A24R12	0698-3444	1	4	RESISTOR 316 1% .125W F TC=0+-100	24546	C4-1/8-T0-316R-F
A24R13	0757-0288	1		RESISTOR 9.09K 1% .125W F TC=0+-100	19701	MF4C1/8-T0-9091-F
A24R14	0698-3433	8	2	RESISTOR 28.7 1% .125W F TC=0+-100	03888	PME55-1/8-T0-28R7-F
A24R15				NOT ASSIGNED		
A24R16	0757-0401	0	8	RESISTOR 100 1% .125W F TC=0+-100	24546	C4-1/8-T0-101-F
A24R17	0757-0290	5	5	RESISTOR 6.19K 1% .125W F TC=0+-100	19701	MF4C1/8-T0-6191-F
A24R18				NOT ASSIGNED		
A24R19	0757-0290	5		RESISTOR 6.19K 1% .125W F TC=0+-100	19701	MF4C1/8-T0-6191-F
A24R20	0757-0290	5		RESISTOR 6.19K 1% .125W F TC=0+-100	19701	MF4C1/8-T0-6191-F
A24R21	0698-3162	0	1	RESISTOR 46.4K 1% .125W F TC=0+-100	24546	C4-1/8-T0-4642-F
A24R22				NOT ASSIGNED		
A24R23	0698-3444	1		RESISTOR 316 1% .125W F TC=0+-100	24546	C4-1/8-T0-316R-F
A24R24	0757-0395	1	3	RESISTOR 56.2 1% .125W F TC=0+-100	24546	C4-1/8-T0-56R2-F
A24R25	0757-0280	3	8	RESISTOR 1K 1% .125W F TC=0+-100	24546	C4-1/8-T0-1001-F
A24R26	0757-0417	8	2	RESISTOR 562 1% .125W F TC=0+-100	24546	C4-1/8-T0-562R-F
A24R27	0757-0422	5	1	RESISTOR 909 1% .125W F TC=0+-100	24546	C4-1/8-T0-909R-F
A24R28	0757-0290	5		RESISTOR 6.19K 1% .125W F TC=0+-100	19701	MF4C1/8-T0-6191-F
A24R29	0698-3444	1		RESISTOR 316 1% .125W F TC=0+-100	24546	C4-1/8-T0-316R-F
A24R30	0757-0395	1		RESISTOR 56.2 1% .125W F TC=0+-100	24546	C4-1/8-T0-56R2-F
A24R31	0757-0280	3		RESISTOR 1K 1% .125W F TC=0+-100	24546	C4-1/8-T0-1001-F
A24R32	0698-3441	8	1	RESISTOR 215 1% .125W F TC=0+-100	24546	C4-1/8-T0-215R-F
A24R33	0757-0280	3		RESISTOR 1K 1% .125W F TC=0+-100	24546	C4-1/8-T0-1001-F
A24R34	0757-0290	5		RESISTOR 6.19K 1% .125W F TC=0+-100	19701	MF4C1/8-T0-6191-F
A24R35	0698-3444	1		RESISTOR 316 1% .125W F TC=0+-100	24546	C4-1/8-T0-316R-F
A24R36	0757-0395	1		RESISTOR 56.2 1% .125W F TC=0+-100	24546	C4-1/8-T0-56R2-F
A24R37	0757-0280	3		RESISTOR 1K 1% .125W F TC=0+-100	24546	C4-1/8-T0-1001-F
A24R38	0757-0417	8		RESISTOR 562 1% .125W F TC=0+-100	24546	C4-1/8-T0-562R-F
A24R39	0757-0280	3		RESISTOR 1K 1% .125W F TC=0+-100	24546	C4-1/8-T0-1001-F
A24R40	0698-3440	7	1	RESISTOR 196 1% .125W F TC=0+-100	24546	C4-1/8-T0-196R-F
A24R41	0698-3260	9		RESISTOR 464K 1% .125W F TC=0+-100	28480	0698-3260
A24R42	0698-3260	9		RESISTOR 464K 1% .125W F TC=0+-100	28480	0698-3260
A24R43	0757-0280	3		RESISTOR 1K 1% .125W F TC=0+-100	24546	C4-1/8-T0-1001-F
A24R44	0757-0438	3	3	RESISTOR 5.11K 1% .125W F TC=0+-100	24546	C4-1/8-T0-5111-F
A24R45	0757-0401	0		RESISTOR 100 1% .125W F TC=0+-100	24546	C4-1/8-T0-101-F
A24R46	0757-0317	7	1	RESISTOR 1.33K 1% .125W F TC=0+-100	24546	C4-1/8-T0-1331-F
A24R47	0757-0416	7		RESISTOR 511 1% .125W F TC=0+-100	24546	C4-1/8-T0-511R-F
A24R48	0757-0416	7		RESISTOR 511 1% .125W F TC=0+-100	24546	C4-1/8-T0-511R-F
A24R49	0757-0416	7		RESISTOR 511 1% .125W F TC=0+-100	24546	C4-1/8-T0-511R-F
A24R50	0757-0416	7		RESISTOR 511 1% .125W F TC=0+-100	24546	C4-1/8-T0-511R-F
A24R51	0757-0279	0		RESISTOR 3.16K 1% .125W F TC=0+-100	24546	C4-1/8-T0-3161-F
A24R52	0757-0401	0		RESISTOR 100 1% .125W F TC=0+-100	24546	C4-1/8-T0-101-F
A24R53	0757-0401	0		RESISTOR 100 1% .125W F TC=0+-100	24546	C4-1/8-T0-101-F
A24R54	0757-0279	0		RESISTOR 3.16K 1% .125W F TC=0+-100	24546	C4-1/8-T0-3161-F
A24R55*	0757-0416	7	5	RESISTOR 511 1% .125W F TC=0+-100	24546	C4-1/8-T0-511R-F
A24R56	0757-0401	0		RESISTOR 100 1% .125W F TC=0+-100	24546	C4-1/8-T0-101-F
A24R57	0757-0438	3		RESISTOR 5.11K 1% .125W F TC=0+-100	24546	C4-1/8-T0-5111-F
A24R58	0757-0288	1		RESISTOR 9.09K 1% .125W F TC=0+-100	19701	MF4C1/8-T0-9091-F
A24R59	0757-0280	3		RESISTOR 1K 1% .125W F TC=0+-100	24546	C4-1/8-T0-1001-F
A24R60	0757-0401	0		RESISTOR 100 1% .125W F TC=0+-100	24546	C4-1/8-T0-101-F

See introduction to this section for ordering information
*Indicates factory selected value

Table 6-3. Replaceable Parts

Reference Designation	HP Part Number	C D	Qty	Description	Mfr Code	Mfr Part Number
A24R61	0757-0280	3		RESISTOR 1K 1% .125W F TC=0+-100	24546	C4-1/8-T0-1001-F
A24R62	0698-3433	8		RESISTOR 28.7 1% .125W F TC=0+-100	03888	PME55-1/8-T0-28R7-F
A24R63	0757-0401	0		RESISTOR 100 1% .125W F TC=0+-100	24546	C4-1/8-T0-101-F
A24R64	0757-0401	0		RESISTOR 100 1% .125W F TC=0+-100	24546	C4-1/8-T0-101-F
A24R65	0757-0438	3		RESISTOR 5.11K 1% .125W F TC=0+-100	24546	C4-1/8-T0-5111-F
A24S1	3101-0684	5	1	SWITCH-SL DPDT MINTR 1A 125VAC PC	28480	3101-0684
A24TP1	1251-0600	0	6	CONNECTOR-SGL CONT PIN 1.14-MM-BSC-SZ SQ	28480	1251-0600
A24TP2	1251-0600	0		CONNECTOR-SGL CONT PIN 1.14-MM-BSC-SZ SQ	28480	1251-0600
A24TP3	1251-0600	0		CONNECTOR-SGL CONT PIN 1.14-MM-BSC-SZ SQ	28480	1251-0600
A24TP4	1251-0600	0		CONNECTOR-SGL CONT PIN 1.14-MM-BSC-SZ SQ	28480	1251-0600
A24TP5	1251-0600	0		CONNECTOR-SGL CONT PIN 1.14-MM-BSC-SZ SQ	28480	1251-0600
A24TP6	1251-0600	0		CONNECTOR-SGL CONT PIN 1.14-MM-BSC-SZ SQ	28480	1251-0600
A24Y1	0410-0671	2	1	CRYSTAL-QUARTZ 18.400 MHZ	28480	0410-0671
				A24 MISCELLANEOUS PARTS		
	08565-00066	2	1	COVER-STEP GAIN OSCILLATOR	28480	08565-00066

See introduction to this section for ordering information
*Indicates factory selected value

Table 6-3. Replaceable Parts

Reference Designation	HP Part Number	C D	Qty	Description	Mfr Code	Mfr Part Number
A24	08565-60166	9	1	STEP GAIN AMPLIFIER ASSEMBLY (OPTION 002)	28480	08565-60166
A24C1	0160-2055	9	19	CAPACITOR-FXD .01UF +80-20% 100VDC CER	28480	0160-2055
A24C2	0160-2055	9		CAPACITOR-FXD .01UF +80-20% 100VDC CER	28480	0160-2055
A24C3	0160-2055	9		CAPACITOR-FXD .01UF +80-20% 100VDC CER	28480	0160-2055
A24C4	0160-2055	9		CAPACITOR-FXD .01UF +80-20% 100VDC CER	28480	0160-2055
A24C5	0160-2055	9		CAPACITOR-FXD .01UF +80-20% 100VDC CER	28480	0160-2055
A24C6	0160-2055	9		CAPACITOR-FXD .01UF +80-20% 100VDC CER	28480	0160-2055
A24C7	0160-2055	9		CAPACITOR-FXD .01UF +80-20% 100VDC CER	28480	0160-2055
A24C8	0160-2055	9		CAPACITOR-FXD .01UF +80-20% 100VDC CER	28480	0160-2055
A24C9	0160-2055	9		CAPACITOR-FXD .01UF +80-20% 100VDC CER	28480	0160-2055
A24C10	0160-2055	9		CAPACITOR-FXD .01UF +80-20% 100VDC CER	28480	0160-2055
A24C11	0160-2055	9		CAPACITOR-FXD .01UF +80-20% 100VDC CER	28480	0160-2055
A24C12	0180-0291	3	1	CAPACITOR-FXD 1UF+-10% 35VDC TA	56289	150D105X9035A2
A24C13	0160-2055	9		CAPACITOR-FXD .01UF +80-20% 100VDC CER	28480	0160-2055
A24C14	0160-2055	9		CAPACITOR-FXD .01UF +80-20% 100VDC CER	28480	0160-2055
A24C15	0160-2055	9		CAPACITOR-FXD .01UF +80-20% 100VDC CER	28480	0160-2055
A24C16	0160-3457	7	3	CAPACITOR-FXD 2000PF +-10% 250VDC CER	28480	0160-3457
A24C17	0160-2055	9		CAPACITOR-FXD .01UF +80-20% 100VDC CER	28480	0160-2055
A24C18	0160-2055	9		CAPACITOR-FXD .01UF +80-20% 100VDC CER	28480	0160-2055
A24C19	0160-3457	7		CAPACITOR-FXD 2000PF +-10% 250VDC CER	28480	0160-3457
A24C20	0160-2055	9		CAPACITOR-FXD .01UF +80-20% 100VDC CER	28480	0160-2055
A24C21	0160-2055	9		CAPACITOR-FXD .01UF +80-20% 100VDC CER	28480	0160-2055
A24C22	0160-3457	7		CAPACITOR-FXD 2000PF +-10% 250VDC CER	28480	0160-3457
A24C23	0160-2055	9		CAPACITOR-FXD .01UF +80-20% 100VDC CER	28480	0160-2055
A24C24	0160-2199	2	1	CAPACITOR-FXD 30PF +-5% 300VDC MICA	28480	0160-2199
A24C25*	0160-2307	4	1	CAPACITOR-FXD 47PF +-5% 300VDC MICA	28480	0160-2307
A24CR1	1901-0050	3	2	DIODE-SWITCHING 80V 200MA 2NS DO-35	28480	1901-0050
A24CR2	1901-0050	3		DIODE-SWITCHING 80V 200MA 2NS DO-35	28480	1901-0050
A24CR3	1901-1070	9	4	DIODE-PIN 110V	28480	1901-1070
A24CR4	1901-1070	9		DIODE-PIN 110V	28480	1901-1070
A24CR5	1901-1070	9		DIODE-PIN 110V	28480	1901-1070
A24CR6	1901-1070	9		DIODE-PIN 110V	28480	1901-1070
A24E1	9170-0029	3	3	CORE-SHIELDING BEAD	28480	9170-0029
A24E2	9170-0029	3		CORE-SHIELDING BEAD	28480	9170-0029
A24E3	9170-0029	3		CORE-SHIELDING BEAD	28480	9170-0029
A24L1	9140-0179	1	8	INDUCTOR RF-CH-MLD 22UH 10% .166DX.385LG	28480	9140-0179
A24L2	9140-0179	1		INDUCTOR RF-CH-MLD 22UH 10% .166DX.385LG	28480	9140-0179
A24L3	9140-0179	1		INDUCTOR RF-CH-MLD 22UH 10% .166DX.385LG	28480	9140-0179
A24L4	9140-0179	1		INDUCTOR RF-CH-MLD 22UH 10% .166DX.385LG	28480	9140-0179
A24L5	9140-0179	1		INDUCTOR RF-CH-MLD 22UH 10% .166DX.385LG	28480	9140-0179
A24L6	9140-0179	1		INDUCTOR RF-CH-MLD 22UH 10% .166DX.385LG	28480	9140-0179
A24L7	9140-0179	1		INDUCTOR RF-CH-MLD 22UH 10% .166DX.385LG	28480	9140-0179
A24L8	9140-0179	1		INDUCTOR RF-CH-MLD 22UH 10% .166DX.385LG	28480	9140-0179
A24L9	9100-2260	1	1	INDUCTOR RF-CH-MLD 1.8UH 10% .105DX.26LG	28480	9100-2260
A24L10	9140-0158	6	1	INDUCTOR RF-CH-MLD 1UH 10% .105DX.26LG	28480	9140-0158
A24Q1	1853-0007	7	6	TRANSISTOR PNP 2N3251 SI TO-18 PD=360MW	04713	2N3251
A24Q2	1854-0345	8	3	TRANSISTOR NPN 2N5179 SI TO-72 PD=200MW	04713	2N5179
A24Q3	1853-0007	7		TRANSISTOR PNP 2N3251 SI TO-18 PD=360MW	04713	2N3251
A24Q4	1854-0345	8		TRANSISTOR NPN 2N5179 SI TO-72 PD=200MW	04713	2N5179
A24Q5	1853-0007	7		TRANSISTOR PNP 2N3251 SI TO-18 PD=360MW	04713	2N3251
A24Q6	1854-0345	8		TRANSISTOR NPN 2N5179 SI TO-72 PD=200MW	04713	2N5179
A24Q7	1853-0007	7		TRANSISTOR PNP 2N3251 SI TO-18 PD=360MW	04713	2N3251
A24Q8	1853-0007	7		TRANSISTOR PNP 2N3251 SI TO-18 PD=360MW	04713	2N3251
A24Q9	1853-0007	7		TRANSISTOR PNP 2N3251 SI TO-18 PD=360MW	04713	2N3251
A24R1	2100-3054	6	2	RESISTOR-TRMR 50K 10% C SIDE-ADJ 17-TRN	02111	43P503
A24R2	2100-3103	6	2	RESISTOR-TRMR 10K 10% C SIDE-ADJ 17-TRN	02111	43P103
A24R3	2100-3054	6		RESISTOR-TRMR 50K 10% C SIDE-ADJ 17-TRN	02111	43P503
A24R4	2100-3061	5	1	RESISTOR-TRMR 500K 10% C SIDE-ADJ 17-TRN	02111	43P504
A24R5	2100-3103	6		RESISTOR-TRMR 10K 10% C SIDE-ADJ 17-TRN	02111	43P103
A24R6	2100-3056	8	1	RESISTOR-TRMR 5K 10% C SIDE-ADJ 17-TRN	02111	43P502
A24R7				NOT ASSIGNED		
A24R8	0757-0288	1	2	RESISTOR 9.09K 1% .125W F TC=0+-100	19701	MF4C1/8-T0-9091-F
A24R9	0698-3457	6	1	RESISTOR 316K 1% .125W F TC=0+-100	28480	0698-3457
A24R10	0757-0346	2	4	RESISTOR 10 1% .125W F TC=0+-100	24546	C4-1/8-T0-10R0-F
A24R11	0757-0279	0	5	RESISTOR 3.16K 1% .125W F TC=0+-100	24546	C4-1/8-T0-3161-F
A24R12	0698-3444	1	4	RESISTOR 316 1% .125W F TC=0+-100	24546	C4-1/8-T0-316R-F
A24R13	0757-0288	1		RESISTOR 9.09K 1% .125W F TC=0+-100	19701	MF4C1/8-T0-9091-F
A24R14	0757-0395	1	4	RESISTOR 56.2 1% .125W F TC=0+-100	24546	C4-1/8-T0-56R2-F
A24R15	0757-0346	2		RESISTOR 10 1% .125W F TC=0+-100	24546	C4-1/8-T0-10R0-F

See introduction to this section for ordering information
*Indicates factory selected value

Table 6-3. Replaceable Parts

Reference Designation	HP Part Number	C D	Qty	Description	Mfr Code	Mfr Part Number
A24R16	0757-0346	2		RESISTOR 10 1% .125W F TC=0+-100	24546	C4-1/8-T0-10R0-F
A24R17	0757-0290	5	2	RESISTOR 6.19K 1% .125W F TC=0+-100	19701	MF4C1/8-T0-6191-F
A24R18	0757-0346	2		RESISTOR 10 1% .125W F TC=0+-100	24546	C4-1/8-T0-10R0-F
A24R19	0757-0290	5		RESISTOR 6.19K 1% .125W F TC=0+-100	19701	MF4C1/8-T0-6191-F
A24R20	0757-0279	0		RESISTOR 3.16K 1% .125W F TC=0+-100	24546	C4-1/8-T0-3161-F
A24R21	0698-3162	0	3	RESISTOR 46.4K 1% .125W F TC=0+-100	24546	C4-1/8-T0-4642-F
A24R22	0757-0279	0		RESISTOR 3.16K 1% .125W F TC=0+-100	24546	C4-1/8-T0-3161-F
A24R23	0698-3444	1		RESISTOR 316 1% .125W F TC=0+-100	24546	C4-1/8-T0-316R-F
A24R24	0757-0395	1		RESISTOR 56.2 1% .125W F TC=0+-100	24546	C4-1/8-T0-56R2-F
A24R25	0757-0280	3	6	RESISTOR 1K 1% .125W F TC=0+-100	24546	C4-1/8-T0-1001-F
A24R26	0757-0417	8	2	RESISTOR 562 1% .125W F TC=0+-100	24546	C4-1/8-T0-562R-F
A24R27	0757-0280	3		RESISTOR 1K 1% .125W F TC=0+-100	24546	C4-1/8-T0-1001-F
A24R28	0757-0279	0		RESISTOR 3.16K 1% .125W F TC=0+-100	24546	C4-1/8-T0-3161-F
A24R29	0698-3444	1		RESISTOR 316 1% .125W F TC=0+-100	24546	C4-1/8-T0-316R-F
A24R30	0757-0395	1		RESISTOR 56.2 1% .125W F TC=0+-100	24546	C4-1/8-T0-56R2-F
A24R31	0757-0280	3		RESISTOR 1K 1% .125W F TC=0+-100	24546	C4-1/8-T0-1001-F
A24R32	0757-0420	3	1	RESISTOR 750 1% .125W F TC=0+-100	24546	C4-1/8-T0-751-F
A24R33	0757-0280	3		RESISTOR 1K 1% .125W F TC=0+-100	24546	C4-1/8-T0-1001-F
A24R34	0757-0279	0		RESISTOR 3.16K 1% .125W F TC=0+-100	24546	C4-1/8-T0-3161-F
A24R35	0698-3444	1		RESISTOR 316 1% .125W F TC=0+-100	24546	C4-1/8-T0-316R-F
A24R36	0757-0395	1		RESISTOR 56.2 1% .125W F TC=0+-100	24546	C4-1/8-T0-56R2-F
A24R37	0757-0280	3		RESISTOR 1K 1% .125W F TC=0+-100	24546	C4-1/8-T0-1001-F
A24R38	0757-0417	8		RESISTOR 562 1% .125W F TC=0+-100	24546	C4-1/8-T0-562R-F
A24R39	0757-0280	3		RESISTOR 1K 1% .125W F TC=0+-100	24546	C4-1/8-T0-1001-F
A24R40	0698-3440	7	1	RESISTOR 196 1% .125W F TC=0+-100	24546	C4-1/8-T0-196R-F
A24R41	0698-3162	0		RESISTOR 46.4K 1% .125W F TC=0+-100	24546	C4-1/8-T0-4642-F
A24R42	0698-3162	0		RESISTOR 46.4K 1% .125W F TC=0+-100	24546	C4-1/8-T0-4642-F
A24S1	3101-0973	5	1	SWITCH-SL DPDT MINTR .5A 125VAC/DC PC	28480	3101-0973
A24TP1	1251-0600	0	6	CONNECTOR-SGL CONT PIN 1.14-MM-BSC-SZ SQ	28480	1251-0600
A24TP2	1251-0600	0		CONNECTOR-SGL CONT PIN 1.14-MM-BSC-SZ SQ	28480	1251-0600
A24TP3	1251-0600	0		CONNECTOR-SGL CONT PIN 1.14-MM-BSC-SZ SQ	28480	1251-0600
A24TP4	1251-0600	0		CONNECTOR-SGL CONT PIN 1.14-MM-BSC-SZ SQ	28480	1251-0600
A24TP5	1251-0600	0		CONNECTOR-SGL CONT PIN 1.14-MM-BSC-SZ SQ	28480	1251-0600
A24TP6	1251-0600	0		CONNECTOR-SGL CONT PIN 1.14-MM-BSC-SZ SQ	28480	1251-0600
				A24 MISCELLANEOUS PARTS		
	08565-00046	8	1	COVER-STEP GAIN	28480	08565-00046

See introduction to this section for ordering information
*Indicates factory selected value

Table 6-3. Replaceable Parts

Reference Designation	HP Part Number	C D	Qty	Description	Mfr Code	Mfr Part Number
A25	08565-60195	4	1	UP-DOWN CONVERTER ASSEMBLY	28480	08565-60195
	08565-20105	2	1	BY PASS,UP-DOWN CONVERTER (OPTION 002)	28480	08565-20105
A25C1	0160-2055	9	26	CAPACITOR-FXD .01UF +80-20% 100VDC CER	28480	0160-2055
A25C2	0160-4084	8	3	CAPACITOR-FXD .1UF +-20% 50VDC CER	28480	0160-4084
A25C3	0160-2055	9		CAPACITOR-FXD .01UF +80-20% 100VDC CER	28480	0160-2055
A25C4	0160-2055	9		CAPACITOR-FXD .01UF +80-20% 100VDC CER	28480	0160-2055
A25C5	0160-2055	9		CAPACITOR-FXD .01UF +80-20% 100VDC CER	28480	0160-2055
A25C6	0160-2209	5	1	CAPACITOR-FXD 360PF +-5% 300VDC MICA	28480	0160-2209
A25C7	0160-2222	2	1	CAPACITOR-FXD 1500PF +-5% 300VDC MICA	28480	0160-2222
A25C8	0160-2055	9		CAPACITOR-FXD .01UF +80-20% 100VDC CER	28480	0160-2055
A25C9	0160-2055	9		CAPACITOR-FXD .01UF +80-20% 100VDC CER	28480	0160-2055
A25C10	0160-2055	9		CAPACITOR-FXD .01UF +80-20% 100VDC CER	28480	0160-2055
A25C11	0160-2055	9		CAPACITOR-FXD .01UF +80-20% 100VDC CER	28480	0160-2055
A25C12	0140-0192	9	1	CAPACITOR-FXD 68PF +-5% 300VDC MICA	72136	DM15E680J0300WV1CR
A25C13	0160-2055	9		CAPACITOR-FXD .01UF +80-20% 100VDC CER	28480	0160-2055
A25C14	0160-4084	8		CAPACITOR-FXD .1UF +-20% 50VDC CER	28480	0160-4084
A25C15				NOT ASSIGNED		
A25C16	0160-2055	9		CAPACITOR-FXD .01UF +80-20% 100VDC CER	28480	0160-2055
A25C17	0160-3094	8	2	CAPACITOR-FXD .1UF +80-20% 100VDC CER	28480	0160-3094
A25C18	0160-3094	8		CAPACITOR-FXD .1UF +80-20% 100VDC CER	28480	0160-3094
A25C19	0160-2208	4	1	CAPACITOR-FXD 330PF +-5% 300VDC MICA	28480	0160-2208
A25C20	0160-2055	9		CAPACITOR-FXD .01UF +80-20% 100VDC CER	28480	0160-2055
A25C21	0160-2055	9		CAPACITOR-FXD .01UF +80-20% 100VDC CER	28480	0160-2055
A25C22	0160-2055	9		CAPACITOR-FXD .01UF +80-20% 100VDC CER	28480	0160-2055
A25C23	0160-2055	9		CAPACITOR-FXD .01UF +80-20% 100VDC CER	28480	0160-2055
A25C24	0121-0453	5	1	CAPACITOR-V TRMR-AIR 1.3-5.4PF 175V	74970	187-0303-125
A25C25	0160-2055	9		CAPACITOR-FXD .01UF +80-20% 100VDC CER	28480	0160-2055
A25C26	0160-2055	9		CAPACITOR-FXD .01UF +80-20% 100VDC CER	28480	0160-2055
A25C27	0160-2055	9		CAPACITOR-FXD .01UF +80-20% 100VDC CER	28480	0160-2055
A25C28	0160-2055	9		CAPACITOR-FXD .01UF +80-20% 100VDC CER	28480	0160-2055
A25C29	0160-2055	9		CAPACITOR-FXD .01UF +80-20% 100VDC CER	28480	0160-2055
A25C30	0160-2055	9		CAPACITOR-FXD .01UF +80-20% 100VDC CER	28480	0160-2055
A25C31	0160-4084	8		CAPACITOR-FXD .1UF +-20% 50VDC CER	28480	0160-4084
A25C32	0160-2055	9		CAPACITOR-FXD .01UF +80-20% 100VDC CER	28480	0160-2055
A25C33	0160-2055	9		CAPACITOR-FXD .01UF +80-20% 100VDC CER	28480	0160-2055
A25C34	0160-2055	9		CAPACITOR-FXD .01UF +80-20% 100VDC CER	28480	0160-2055
A25C35	0160-2055	9		CAPACITOR-FXD .01UF +80-20% 100VDC CER	28480	0160-2055
A25C36				NOT ASSIGNED		
A25C37	0160-2055	9		CAPACITOR-FXD .01UF +80-20% 100VDC CER	28480	0160-2055
A25C38	0160-2055	9		CAPACITOR-FXD .01UF +80-20% 100VDC CER	28480	0160-2055
A25CR1	1901-0639	4	2	DIODE-PIN	28480	5082-3080
A25CR2	1901-0639	4		DIODE-PIN	28480	5082-3080
A25CR3	1901-0050	3	9	DIODE-SWITCHING 80V 200MA 2NS DO-35	28480	1901-0050
A25CR4	1901-0050	3		DIODE-SWITCHING 80V 200MA 2NS DO-35	28480	1901-0050
A25CR5	1901-0050	3		DIODE-SWITCHING 80V 200MA 2NS DO-35	28480	1901-0050
A25CR6	1901-0050	3		DIODE-SWITCHING 80V 200MA 2NS DO-35	28480	1901-0050
A25CR7	1901-0050	3		DIODE-SWITCHING 80V 200MA 2NS DO-35	28480	1901-0050
A25CR8	1901-0050	3		DIODE-SWITCHING 80V 200MA 2NS DO-35	28480	1901-0050
A25CR9	1901-0050	3		DIODE-SWITCHING 80V 200MA 2NS DO-35	28480	1901-0050
A25CR10	1901-0050	3		DIODE-SWITCHING 80V 200MA 2NS DO-35	28480	1901-0050
A25CR11	1901-0050	3		DIODE-SWITCHING 80V 200MA 2NS DO-35	28480	1901-0050
A25E1	9170-0029	3	6	CORE-SHIELDING BEAD	28480	9170-0029
A25E2	9170-0029	3		CORE-SHIELDING BEAD	28480	9170-0029
A25E3	9170-0029	3		CORE-SHIELDING BEAD	28480	9170-0029
A25E4	9170-0029	3		CORE-SHIELDING BEAD	28480	9170-0029
A25E5	9170-0029	3		CORE-SHIELDING BEAD	28480	9170-0029
A25E6	9170-0029	3		CORE-SHIELDING BEAD	28480	9170-0029
A25L1	9140-0351	1	1	INDUCTOR RF-CH-MLD 180NH 5% .166DX.385LG	28480	9140-0351
A25L2	9100-1627	2	1	INDUCTOR RF-CH-MLD 39UH 5% .166DX.385LG	28480	9100-1627
A25L3	9100-2247	4	1	INDUCTOR RF-CH-MLD 100NH 10% .105DX.26LG	28480	9100-2247
A25L4	9100-1619	2	1	INDUCTOR RF-CH-MLD 6.8UH 10%	28480	9100-1619
A25L5	9100-1617	0	1	INDUCTOR RF-CH-MLD 3.9UH 10%	28480	9100-1617
A25L6	9140-0111	1	1	INDUCTOR RF-CH-MLD 3.3UH 10%	28480	9140-0111
A25L7	9100-1624	9	2	INDUCTOR RF-CH-MLD 30UH 5% .166DX.385LG	28480	9100-1624
A25L8	9100-1624	9		INDUCTOR RF-CH-MLD 30UH 5% .166DX.385LG	28480	9100-1624
A25Q1	1853-0015	7	1	TRANSISTOR PNP SI PD=200MW FT=500MHZ	28480	1853-0015
A25Q2	1854-0247	9	1	TRANSISTOR NPN SI TO-39 PD=1W FT=800MHZ	28480	1854-0247
A25Q3	1853-0007	7	4	TRANSISTOR PNP 2N3251 SI TO-18 PD=360MW	04713	2N3251
A25Q4	1853-0007	7		TRANSISTOR PNP 2N3251 SI TO-18 PD=360MW	04713	2N3251
A25Q5	1854-0019	3	2	TRANSISTOR NPN SI TO-18 PD=360MW	28480	1854-0019

See introduction to this section for ordering information
*Indicates factory selected value

Table 6-3. Replaceable Parts

Reference Designation	HP Part Number	C D	Qty	Description	Mfr Code	Mfr Part Number
A25Q6	1854-0019	3		TRANSISTOR NPN SI TO-18 PD=360MW	28480	1854-0019
A25Q7	1853-0007	7		TRANSISTOR PNP 2N3251 SI TO-18 PD=360MW	04713	2N3251
A25Q8	1854-0345	8	1	TRANSISTOR NPN 2N5179 SI TO-72 PD=200MW	04713	2N5179
A25Q9	1853-0007	7		TRANSISTOR PNP 2N3251 SI TO-18 PD=360MW	04713	2N3251
A25Q10	1855-0081	1	1	TRANSISTOR J-FET N-CHAN D-MODE SI	28480	1855-0081
A25Q11	1853-0281	9	1	TRANSISTOR PNP 2N2907A SI TO-18 PD=400MW	04713	2N2907A
A25R1	0757-0346	2	4	RESISTOR 10 1% .125W F TC=0+-100	24546	C4-1/8-T0-10R0-F
A25R2	0757-0279	0	4	RESISTOR 3.16K 1% .125W F TC=0+-100	24546	C4-1/8-T0-3161-F
A25R3	0757-0279	0		RESISTOR 3.16K 1% .125W F TC=0+-100	24546	C4-1/8-T0-3161-F
A25R4	0757-0290	5	1	RESISTOR 6.19K 1% .125W F TC=0+-100	19701	MF4C1/8-T0-6191-F
A25R5	0757-0279	0		RESISTOR 3.16K 1% .125W F TC=0+-100	24546	C4-1/8-T0-3161-F
A25R6	0757-0280	3	6	RESISTOR 1K 1% .125W F TC=0+-100	24546	C4-1/8-T0-1001-F
A25R7	0757-0280	3		RESISTOR 1K 1% .125W F TC=0+-100	24546	C4-1/8-T0-1001-F
A25R8	0757-0180	2	4	RESISTOR 31.6 1% .125W F TC=0+-100	28480	0757-0180
A25R9	0757-0419	0	4	RESISTOR 681 1% .125W F TC=0+-100	24546	C4-1/8-T0-681R-F
A25R10	0757-0438	3	3	RESISTOR 5.11K 1% .125W F TC=0+-100	24546	C4-1/8-T0-5111-F
A25R11	0757-0180	2		RESISTOR 31.6 1% .125W F TC=0+-100	28480	0757-0180
A25R12	0757-0419	0		RESISTOR 681 1% .125W F TC=0+-100	24546	C4-1/8-T0-681R-F
A25R13	0757-0442	9	3	RESISTOR 10K 1% .125W F TC=0+-100	24546	C4-1/8-T0-1002-F
A25R14	0757-0405	4	2	RESISTOR 162 1% .125W F TC=0+-100	24546	C4-1/8-T0-162R-F
A25R15	0757-0346	2		RESISTOR 10 1% .125W F TC=0+-100	24546	C4-1/8-T0-10R0-F
A25R16	0698-3457	6	1	RESISTOR 316K 1% .125W F TC=0+-100	28480	0698-3457
A25R17	0698-3444	1	2	RESISTOR 316 1% .125W F TC=0+-100	24546	C4-1/8-T0-316R-F
A25R18	0698-3260	9	1	RESISTOR 464K 1% .125W F TC=0+-100	28480	0698-3260
A25R19	0698-3440	7		RESISTOR 196 1% .125W F TC=0+-100	24546	C4-1/8-T0-196R-F
A25R20	2100-3123	0	1	RESISTOR-TRMR 500 10% C SIDE-ADJ 17-TRN	02111	43P501
A25R21	0757-0401	0		RESISTOR 100 1% .125W F TC=0+-100	24546	C4-1/8-T0-101-F
A25R22	0757-0280	3		RESISTOR 1K 1% .125W F TC=0+-100	24546	C4-1/8-T0-1001-F
A25R23*	0698-3440	7	4	RESISTOR 196 1% .125W F TC=0+-100	24546	C4-1/8-T0-196R-F
A25R24	0757-0279	0		RESISTOR 3.16K 1% .125W F TC=0+-100	24546	C4-1/8-T0-3161-F
A25R25	0757-0439	4	1	RESISTOR 6.81K 1% .125W F TC=0+-100	24546	C4-1/8-T0-6811-F
A25R26	0698-3440	7		RESISTOR 196 1% .125W F TC=0+-100	24546	C4-1/8-T0-196R-F
A25R27	0757-0420	3	1	RESISTOR 750 1% .125W F TC=0+-100	24546	C4-1/8-T0-751-F
A25R28	0757-0346	2		RESISTOR 10 1% .125W F TC=0+-100	24546	C4-1/8-T0-10R0-F
A25R29	0757-0405	4		RESISTOR 162 1% .125W F TC=0+-100	24546	C4-1/8-T0-162R-F
A25R30	0757-0180	2		RESISTOR 31.6 1% .125W F TC=0+-100	28480	0757-0180
A25R31	0757-0419	0		RESISTOR 681 1% .125W F TC=0+-100	24546	C4-1/8-T0-681R-F
A25R32	0757-0442	9		RESISTOR 10K 1% .125W F TC=0+-100	24546	C4-1/8-T0-1002-F
A25R33	0757-0438	3		RESISTOR 5.11K 1% .125W F TC=0+-100	24546	C4-1/8-T0-5111-F
A25R34	0757-0419	0		RESISTOR 681 1% .125W F TC=0+-100	24546	C4-1/8-T0-681R-F
A25R35	0757-0180	2		RESISTOR 31.6 1% .125W F TC=0+-100	28480	0757-0180
A25R36	0757-0280	3		RESISTOR 1K 1% .125W F TC=0+-100	24546	C4-1/8-T0-1001-F
A25R37	0698-3444	1		RESISTOR 316 1% .125W F TC=0+-100	24546	C4-1/8-T0-316R-F
A25R38	0757-0280	3		RESISTOR 1K 1% .125W F TC=0+-100	24546	C4-1/8-T0-1001-F
A25R39	0698-8821	8	1	RESISTOR 5.62 1% .125W F TC=0+-100	28480	0698-8821
A25R40	0757-0442	9		RESISTOR 10K 1% .125W F TC=0+-100	24546	C4-1/8-T0-1002-F
A25R41	0757-0438	3		RESISTOR 5.11K 1% .125W F TC=0+-100	24546	C4-1/8-T0-5111-F
A25R42	0757-0346	2		RESISTOR 10 1% .125W F TC=0+-100	24546	C4-1/8-T0-10R0-F
A25R43	0698-3440	7		RESISTOR 196 1% .125W F TC=0+-100	24546	C4-1/8-T0-196R-F
A25R44	0698-3442	9	1	RESISTOR 237 1% .125W F TC=0+-100	24546	C4-1/8-T0-237R-F
A25R45	0757-0422	5	1	RESISTOR 909 1% .125W F TC=0+-100	24546	C4-1/8-T0-909R-F
A25R46	0698-3433	8	1	RESISTOR 28.7 1% .125W F TC=0+-100	03888	PME55-1/8-T0-28R7-F
A25R47	0757-0280	3		RESISTOR 1K 1% .125W F TC=0+-100	24546	C4-1/8-T0-1001-F
A25R48*	0757-0401	0	2	RESISTOR 100 1% .125W F TC=0+-100	24546	C4-1/8-T0-101-F
A25S1	3101-1274	1	1	SWITCH-SL SPDT SUBMIN 2A 120VAC PC	28480	3101-1274
A25T1	85662-80002	4	1	COIL ASSEMBLY-TRANSFORMER	28480	85662-80002
A25TP1	1251-0600	0	1	CONNECTOR-SGL CONT PIN 1.14-MM-BSC-SZ SQ	28480	1251-0600
A25U1	0955-0063	0	2	MIXER/DOUBLER 5-500 MH	28480	0955-0063
A25U2	0955-0063	0		MIXER/DOUBLER 5-500 MH	28480	0955-0063
				A25 MISCELLANEOUS PARTS		
	08565-00142	5	1	COVER-UP DOWN CONVERTER	28480	08565-00142
				A25 BY PASS MISCELLANEOUS PARTS		
	08565-00065	1	1	COVER-BLANK	28480	08565-00065
	08565-60044	2	1	KNOB-RESOLUTION BANDWIDTH	28480	08565-60044

See introduction to this section for ordering information
*Indicates factory selected value

Table 6-3. Replaceable Parts

Reference Designation	HP Part Number	C D	Qty	Description	Mfr Code	Mfr Part Number
A26	08565-60026	0	1	3 MHZ FILTER ASSEMBLY	28480	08565-60026
A26C1	0160-3094	8	2	CAPACITOR-FXD .1UF +-10% 100VDC CER	28480	0160-3094
A26C2	0121-0444	4	5	CAPACITOR-V TRMR-CER 3-9PF 160V PC-MTG	28480	0121-0444
A26C3	0121-0105	4	5	CAPACITOR-V TRMR-CER 9-35PF 200V PC-MTG	52763	304324 9/35PF N650
A26C4	0160-4297	5	13	CAPACITOR-FXD .022UF +80-20% 100VDC CER	56289	C023F101H223ZS22-CDH
A26C5	0160-2055	9	12	CAPACITOR-FXD .01UF +80-20% 100VDC CER	28480	0160-2055
A26C6	0160-2055	9		CAPACITOR-FXD .01UF +80-20% 100VDC CER	28480	0160-2055
A26C7	0160-2202	8	5	CAPACITOR-FXD 75PF +-5% 300VDC MICA	28480	0160-2202
A26C8	0160-4297	5		CAPACITOR-FXD .022UF +80-20% 100VDC CER	56289	C023F101H223ZS22-CDH
A26C9	0160-4297	5		CAPACITOR-FXD .022UF +80-20% 100VDC CER	56289	C023F101H223ZS22-CDH
A26C10	0160-4300	1	4	CAPACITOR-FXD .047UF +80-20% 100VDC CER	56289	C023F101L473ZS22-CDH
A26C11	0160-4300	1		CAPACITOR-FXD .047UF +80-20% 100VDC CER	56289	C023F101L473ZS22-CDH
A26C12	0121-0444	4		CAPACITOR-V TRMR-CER 3-9PF 160V PC-MTG	28480	0121-0444
A26C13	0121-0105	4		CAPACITOR-V TRMR-CER 9-35PF 200V PC-MTG	52763	304324 9/35PF N650
A26C14	0160-4297	5		CAPACITOR-FXD .022UF +80-20% 100VDC CER	56289	C023F101H223ZS22-CDH
A26C15	0160-2055	9		CAPACITOR-FXD .01UF +80-20% 100VDC CER	28480	0160-2055
A26C16	0160-2202	8		CAPACITOR-FXD 75PF +-5% 300VDC MICA	28480	0160-2202
A26C17	0160-2055	9		CAPACITOR-FXD .01UF +80-20% 100VDC CER	28480	0160-2055
A26C18	0160-4297	5		CAPACITOR-FXD .022UF +80-20% 100VDC CER	56289	C023F101H223ZS22-CDH
A26C19	0121-0444	4		CAPACITOR-V TRMR-CER 3-9PF 160V PC-MTG	28480	0121-0444
A26C20	0121-0105	4		CAPACITOR-V TRMR-CER 9-35PF 200V PC-MTG	52763	304324 9/35PF N650
A26C21	0160-2055	9		CAPACITOR-FXD .01UF +80-20% 100VDC CER	28480	0160-2055
A26C22	0160-2202	8		CAPACITOR-FXD 75PF +-5% 300VDC MICA	28480	0160-2202
A26C23	0160-2055	9		CAPACITOR-FXD .01UF +80-20% 100VDC CER	28480	0160-2055
A26C24	0160-4297	5		CAPACITOR-FXD .022UF +80-20% 100VDC CER	56289	C023F101H223ZS22-CDH
A26C25	0121-0444	4		CAPACITOR-V TRMR-CER 3-9PF 160V PC-MTG	28480	0121-0444
A26C26	0121-0105	4		CAPACITOR-V TRMR-CER 9-35PF 200V PC-MTG	52763	304324 9/35PF N650
A26C27	0160-4297	5		CAPACITOR-FXD .022UF +80-20% 100VDC CER	56289	C023F101H223ZS22-CDH
A26C28	0160-2055	9		CAPACITOR-FXD .01UF +80-20% 100VDC CER	28480	0160-2055
A26C29	0160-2055	9		CAPACITOR-FXD .01UF +80-20% 100VDC CER	28480	0160-2055
A26C30	0160-2202	8		CAPACITOR-FXD 75PF +-5% 300VDC MICA	28480	0160-2202
A26C31	0160-4297	5		CAPACITOR-FXD .022UF +80-20% 100VDC CER	56289	C023F101H223ZS22-CDH
A26C32	0121-0444	4		CAPACITOR-V TRMR-CER 3-9PF 160V PC-MTG	28480	0121-0444
A26C33	0121-0105	4		CAPACITOR-V TRMR-CER 9-35PF 200V PC-MTG	52763	304324 9/35PF N650
A26C34	0160-4297	5		CAPACITOR-FXD .022UF +80-20% 100VDC CER	56289	C023F101H223ZS22-CDH
A26C35	0160-2055	9		CAPACITOR-FXD .01UF +80-20% 100VDC CER	28480	0160-2055
A26C36	0160-2055	9		CAPACITOR-FXD .01UF +80-20% 100VDC CER	28480	0160-2055
A26C37	0160-2202	8		CAPACITOR-FXD 75PF +-5% 300VDC MICA	28480	0160-2202
A26C38	0160-4300	1		CAPACITOR-FXD .047UF +80-20% 100VDC CER	56289	C023F101L473ZS22-CDH
A26C39	0160-4297	5		CAPACITOR-FXD .022UF +80-20% 100VDC CER	56289	C023F101H223ZS22-CDH
A26C40	0160-2055	9		CAPACITOR-FXD .01UF +80-20% 100VDC CER	28480	0160-2055
A26C41	0160-3094	8		CAPACITOR-FXD .1UF +—10% 100VDC CER	28480	0160-3094
A26C42	0160-4300	1		CAPACITOR-FXD .047UF +80-20% 100VDC CER	56289	C023F101L473ZS22-CDH
A26C43	0160-4297	5		CAPACITOR-FXD .022UF +80-20% 100VDC CER	56289	C023F101H223ZS22-CDH
A26C44	0160-4297	5		CAPACITOR-FXD .022UF +80-20% 100VDC CER	56289	C023F101H223ZS22-CDH
A26C45	0160-4297	5		CAPACITOR-FXD .022UF +80-20% 100VDC CER	56289	C023F101H223ZS22-CDH
A26CR1	1901-0050	3	14	DIODE-SWITCHING 80V 200MA 2NS DO-35	28480	1901-0050
A26CR2	1901-0050	3		DIODE-SWITCHING 80V 200MA 2NS DO-35	28480	1901-0050
A26CR3	1901-0050	3		DIODE-SWITCHING 80V 200MA 2NS DO-35	28480	1901-0050
A26CR4	1901-0050	3		DIODE-SWITCHING 80V 200MA 2NS DO-35	28480	1901-0050
A26CR5	1901-0050	3		DIODE-SWITCHING 80V 200MA 2NS DO-35	28480	1901-0050
A26CR6	1901-0050	3		DIODE-SWITCHING 80V 200MA 2NS DO-35	28480	1901-0050
A26CR7	1901-0050	3		DIODE-SWITCHING 80V 200MA 2NS DO-35	28480	1901-0050
A26CR8	1901-0050	3		DIODE-SWITCHING 80V 200MA 2NS DO-35	28480	1901-0050
A26CR9	1901-0050	3		DIODE-SWITCHING 80V 200MA 2NS DO-35	28480	1901-0050
A26CR10	1901-0050	3		DIODE-SWITCHING 80V 200MA 2NS DO-35	28480	1901-0050
A26CR11	1901-0050	3		DIODE-SWITCHING 80V 200MA 2NS DO-35	28480	1901-0050
A26CR12	1901-0050	3		DIODE-SWITCHING 80V 200MA 2NS DO-35	28480	1901-0050
A26CR14	1901-0050	3		DIODE-SWITCHING 80V 200MA 2NS DO-35	28480	1901-0050
A26CR15	1901-0050	3		DIODE-SWITCHING 80V 200MA 2NS DO-35	28480	1901-0050
A26L1	9100-1641	0	5	INDUCTOR RF-CH-MLD 240UH 5% .166DX.385LG	28480	9100-1641
A26L2	9100-1631	8	5	INDUCTOR RF-CH-MLD 56UH 5% .166DX.385LG	28480	9100-1631
A26L3	9100-1641	0		INDUCTOR RF-CH-MLD 240UH 5% .166DX.385LG	28480	9100-1641
A26L4	9100-1631	8		INDUCTOR RF-CH-MLD 56UH 5% .166DX.385LG	28480	9100-1631
A26L5	9100-1641	0		INDUCTOR RF-CH-MLD 240UH 5% .166DX.385LG	28480	9100-1641
A26L6	9100-1631	8		INDUCTOR RF-CH-MLD 56UH 5% .166DX.385LG	28480	9100-1631
A26L7	9100-1641	0		INDUCTOR RF-CH-MLD 240UH 5% .166DX.385LG	28480	9100-1641
A26L8	9100-1631	8		INDUCTOR RF-CH-MLD 56UH 5% .166DX.385LG	28480	9100-1631
A26L9	9100-1641	0		INDUCTOR RF-CH-MLD 240UH 5% .166DX.385LG	28480	9100-1641
A26L10	9100-1631	8		INDUCTOR RF-CH-MLD 56UH 5% .166DX.385LG	28480	9100-1631
A26L11	9140-0114	4	3	INDUCTOR RF-CH-MLD 10UH 10% .166DX.385LG	28480	9140-0114
A26L12	9140-0114	4		INDUCTOR RF-CH-MLD 10UH 10% .166DX.385LG	28480	9140-0114
A26L13	9140-0114	4		INDUCTOR RF-CH-MLD 10UH 10% .166DX.385LG	28480	9140-0114

See introduction to this section for ordering information
*Indicates factory selected value

Table 6-3. Replaceable Parts

Reference Designation	HP Part Number	C D	Qty	Description	Mfr Code	Mfr Part Number
A26Q1	1854-0404	0	6	TRANSISTOR NPN SI TO-18 PD=360MW	28480	1854-0404
A26Q2	1853-0034	0	6	TRANSISTOR PNP SI TO-18 PD=360MW	28480	1853-0034
A26Q3	1853-0034	0		TRANSISTOR PNP SI TO-18 PD=360MW	28480	1853-0034
A26Q4	1854-0404	0		TRANSISTOR NPN SI TO-18 PD=360MW	28480	1854-0404
A26Q5	1853-0034	0		TRANSISTOR PNP SI TO-18 PD=360MW	28480	1853-0034
A26Q6	1854-0404	0		TRANSISTOR NPN SI TO-18 PD=360MW	28480	1854-0404
A26Q7	1853-0034	0		TRANSISTOR PNP SI TO-18 PD=360MW	28480	1853-0034
A26Q8	1854-0404	0		TRANSISTOR NPN SI TO-18 PD=360MW	28480	1854-0404
A26Q9	1853-0034	0		TRANSISTOR PNP SI TO-18 PD=360MW	28480	1853-0034
A26Q10	1854-0404	0		TRANSISTOR NPN SI TO-18 PD=360MW	28480	1854-0404
A26Q11	1853-0034	0		TRANSISTOR PNP SI TO-18 PD=360MW	28480	1853-0034
A26Q12	1854-0404	0		TRANSISTOR NPN SI TO-18 PD=360MW	28480	1854-0404
A26Q13	1854-0637	1	1	TRANSISTOR NPN 2N2219A SI TO-5 PD=800MW	01295	2N2219A
A26R1	0757-0458	7	2	RESISTOR 51.1K 1% .125W F TC=0+-100	24546	C4-1/8-T0-5112-F
A26R2	0698-3160	8	1	RESISTOR 31.6K 1% .125W F TC=0+-100	24546	C4-1/8-T0-3162-F
A26R3	0698-0082	7	2	RESISTOR 464 1% .125W F TC=0+-100	24546	C4-1/8-T0-4640-F
A26R4	0698-3442	9	2	RESISTOR 237 1% .125W F TC=0+-100	24546	C4-1/8-T0-237R-F
A26R5	0698-0083	8	1	RESISTOR 1.96K 1% .125W F TC=0+-100	24546	C4-1/8-T0-1961-F
A26R6	0757-0279	0	6	RESISTOR 3.16K 1% .125W F TC=0+-100	24546	C4-1/8-T0-3161-F
A26R7*	0757-0278	9	5	RESISTOR 1.78K 1% .125W F TC=0+-100	24546	C4-1/8-T0-1781-F
A26R8	0757-1094	9	4	RESISTOR 1.47K 1% .125W F TC=0+-100	24546	C4-1/8-T0-1471-F
A26R9*	0757-0447	4	4	RESISTOR 16.2K 1% .125W F TC=0+-100	24546	C4-1/8-T0-1622-F
A26R10*	0757-0442	9	6	RESISTOR 10K 1% .125W F TC=0+-100	24546	C4-1/8-T0-1002-F
A26R11	0757-0416	7	5	RESISTOR 511 1% .125W F TC=0+-100	24546	C4-1/8-T0-511R-F
A26R12	0757-0346	2	3	RESISTOR 10 1% .125W F TC=0+-100	24546	C4-1/8-T0-10R0-F
A26R13	0698-3132	4	4	RESISTOR 261 1% .125W F TC=0+-100	24546	C4-1/8-T0-2610-F
A26R14	0757-0394	0	2	RESISTOR 51.1 1% .125W F TC=0+-100	24546	C4-1/8-T0-51R1-F
A26R15	0757-0279	0		RESISTOR 3.16K 1% .125W F TC=0+-100	24546	C4-1/8-T0-3161-F
A26R16	0757-0438	3	5	RESISTOR 5.11K 1% .125W F TC=0+-100	24546	C4-1/8-T0-5111-F
A26R17*	0757-0415	6	5	RESISTOR 475 1% .125W F TC=0+-100	24546	C4-1/8-T0-475R-F
A26R18*	0757-0278	9		RESISTOR 1.78K 1% .125W F TC=0+-100	24546	C4-1/8-T0-1781-F
A26R19*	0757-0447	4		RESISTOR 16.2K 1% .125W F TC=0+-100	24546	C4-1/8-T0-1622-F
A26R20*	0757-0442	9		RESISTOR 10K 1% .125W F TC=0+-100	24546	C4-1/8-T0-1002-F
A26R21	0757-1094	9		RESISTOR 1.47K 1% .125W F TC=0+-100	24546	C4-1/8-T0-1471-F
A26R22	0757-0394	0		RESISTOR 51.1 1% .125W F TC=0+-100	24546	C4-1/8-T0-51R1-F
A26R23	0757-0416	7		RESISTOR 511 1% .125W F TC=0+-100	24546	C4-1/8-T0-511R-F
A26R24	0698-3132	4		RESISTOR 261 1% .125W F TC=0+-100	24546	C4-1/8-T0-2610-F
A26R25	0757-0279	0		RESISTOR 3.16K 1% .125W F TC=0+-100	24546	C4-1/8-T0-3161-F
A26R26	0757-0438	3		RESISTOR 5.11K 1% .125W F TC=0+-100	24546	C4-1/8-T0-5111-F
A26R27*	0757-0415	6		RESISTOR 475 1% .125W F TC=0+-100	24546	C4-1/8-T0-475R-F
A26R28*	0757-0278	9		RESISTOR 1.78K 1% .125W F TC=0+-100	24546	C4-1/8-T0-1781-F
A26R29*	0757-0447	4		RESISTOR 16.2K 1% .125W F TC=0+-100	24546	C4-1/8-T0-1622-F
A26R30*	0757-0442	9		RESISTOR 10K 1% .125W F TC=0+-100	24546	C4-1/8-T0-1002-F
A26R31	0757-1094	9		RESISTOR 1.47K 1% .125W F TC=0+-100	24546	C4-1/8-T0-1471-F
A26R32	0698-3132	4		RESISTOR 261 1% .125W F TC=0+-100	24546	C4-1/8-T0-2610-F
A26R33	0757-0416	7		RESISTOR 511 1% .125W F TC=0+-100	24546	C4-1/8-T0-511R-F
A26R34	0757-0279	0		RESISTOR 3.16K 1% .125W F TC=0+-100	24546	C4-1/8-T0-3161-F
A26R35	0757-0438	3		RESISTOR 5.11K 1% .125W F TC=0+-100	24546	C4-1/8-T0-5111-F
A26R36*	0757-0415	6		RESISTOR 475 1% .125W F TC=0+-100	24546	C4-1/8-T0-475R-F
A26R37*	0757-0278	9		RESISTOR 1.78K 1% .125W F TC=0+-100	24546	C4-1/8-T0-1781-F
A26R38	0757-0346	2		RESISTOR 10 1% .125W F TC=0+-100	24546	C4-1/8-T0-10R0-F
A26R39*	0757-0447	4		RESISTOR 16.2K 1% .125W F TC=0+-100	24546	C4-1/8-T0-1622-F
A26R40*	0757-0442	9		RESISTOR 10K 1% .125W F TC=0+-100	24546	C4-1/8-T0-1002-F
A26R41	0698-3132	4		RESISTOR 261 1% .125W F TC=0+-100	24546	C4-1/8-T0-2610-F
A26R42	0757-0416	7		RESISTOR 511 1% .125W F TC=0+-100	24546	C4-1/8-T0-511R-F
A26R43	0757-0279	0		RESISTOR 3.16K 1% .125W F TC=0+-100	24546	C4-1/8-T0-3161-F
A26R44	0757-0438	3		RESISTOR 5.11K 1% .125W F TC=0+-100	24546	C4-1/8-T0-5111-F
A26R45*	0757-0415	6		RESISTOR 475 1% .125W F TC=0+-100	24546	C4-1/8-T0-475R-F
A26R46*	0757-0278	9		RESISTOR 1.78K 1% .125W F TC=0+-100	24546	C4-1/8-T0-1781-F
A26R47	0757-0346	2		RESISTOR 10 1% .125W F TC=0+-100	24546	C4-1/8-T0-10R0-F
A26R48*	0757-0444	1	2	RESISTOR 12.1K 1% .125W F TC=0+-100	24546	C4-1/8-T0-1212-F
A26R49*	0757-0444	1		RESISTOR 12.1K 1% .125W F TC=0+-100	24546	C4-1/8-T0-1212-F
A26R50	0757-0279	0		RESISTOR 3.16K 1% .125W F TC=0+-100	24546	C4-1/8-T0-3161-F
A26R51	0757-0438	3		RESISTOR 5.11K 1% .125W F TC=0+-100	24546	C4-1/8-T0-5111-F
A26R52	0698-0082	7		RESISTOR 464 1% .125W F TC=0+-100	24546	C4-1/8-T0-4640-F
A26R53	2100-2521	0	1	RESISTOR-TRMR 2K 10% C SIDE-ADJ 1-TRN	30983	ET50X202
A26R54*	0757-0442	9		RESISTOR 10K 1% .125W F TC=0+-100	24546	C4-1/8-T0-1002-F
A26R55	0757-0416	7		RESISTOR 511 1% .125W F TC=0+-100	24546	C4-1/8-T0-511R-F
A26R56	0757-0401	0	3	RESISTOR 100 1% .125W F TC=0+-100	24546	C4-1/8-T0-101-F
A26R57	0698-3440	7	1	RESISTOR 196 1% .125W F TC=0+-100	24546	C4-1/8-T0-196R-F
A26R58	0757-0401	0		RESISTOR 100 1% .125W F TC=0+-100	24546	C4-1/8-T0-101-F
A26R59	0757-0401	0		RESISTOR 100 1% .125W F TC=0+-100	24546	C4-1/8-T0-101-F
A26R60	0757-0458	7		RESISTOR 51.1K 1% .125W F TC=0+-100	24546	C4-1/8-T0-5112-F
A26R61	0757-0442	9		RESISTOR 10K 1% .125W F TC=0+-100	24546	C4-1/8-T0-1002-F
A26R62	0698-3442	9		RESISTOR 237 1% .125W F TC=0+-100	24546	C4-1/8-T0-237R-F
A26R63	0757-0274	5	1	RESISTOR 1.21K 1% .125W F TC=0+-100	24546	C4-1/8-T0-1211-F
A26R64*	0757-0415	6		RESISTOR 475 1% .125W F TC=0+-100	24546	C4-1/8-T0-475R-F
A26R65	0757-1094	9		RESISTOR 1.47K 1% .125W F TC=0+-100	24546	C4-1/8-T0-1471-F

See introduction to this section for ordering information
*Indicates factory selected value

Table 6-3. Replaceable Parts

Reference Designation	HP Part Number	C D	Qty	Description	Mfr Code	Mfr Part Number
A26R66	0698-3450	9	2	RESISTOR 42.2K 1% .125W F TC=0+-100	24546	C4-1/8-T0-4222-F
A26R67	0698-3450	9		RESISTOR 42.2K 1% .125W F TC=0+-100	24546	C4-1/8-T0-4222-F
A26TP1	0360-1788	7	10	CONNECTOR-SGL CONT PIN .045-IN-BSC-SZ SQ	28480	0360-1788
A26TP2	0360-1788	7		CONNECTOR-SGL CONT PIN .045-IN-BSC-SZ SQ	28480	0360-1788
A26TP3	0360-1788	7		CONNECTOR-SGL CONT PIN .045-IN-BSC-SZ SQ	28480	0360-1788
A26TP4	0360-1788	7		CONNECTOR-SGL CONT PIN .045-IN-BSC-SZ SQ	28480	0360-1788
A26TP5	0360-1788	7		CONNECTOR-SGL CONT PIN .045-IN-BSC-SZ SQ	28480	0360-1788
A26TP6	0360-1788	7		CONNECTOR-SGL CONT PIN .045-IN-BSC-SZ SQ	28480	0360-1788
A26TP7	0360-1788	7		CONNECTOR-SGL CONT PIN .045-IN-BSC-SZ SQ	28480	0360-1788
A26TP8	0360-1788	7		CONNECTOR-SGL CONT PIN .045-IN-BSC-SZ SQ	28480	0360-1788
A26TP9	0360-1788	7		CONNECTOR-SGL CONT PIN .045-IN-BSC-SZ SQ	28480	0360-1788
A26TP10	0360-1788	7		CONNECTOR-SGL CONT PIN .045-IN-BSC-SZ SQ	28480	0360-1788
A26Y1	0410-0404	9	5	CRYSTAL-QUARTZ MATCHED SET OF 5/3MHZ	28480	0410-0404
A26Y2	0410-0404	9		CRYSTAL-QUARTZ MATCHED SET OF 5/3MHZ	28480	0410-0404
A26Y3	0410-0404	9		CRYSTAL-QUARTZ MATCHED SET OF 5/3MHZ	28480	0410-0404
A26Y4	0410-0404	9		CRYSTAL-QUARTZ MATCHED SET OF 5/3MHZ	28480	0410-0404
A26Y5	0410-0404	9		CRYSTAL-QUARTZ MATCHED SET OF 5/3MHZ	28480	0410-0404
				A26 MISCELLANEOUS PARTS		
	0360-0124	3	10	CONNECTOR-SGL CONT PIN .04-IN-BSC-SZ RND	28480	0360-0124
	08565-00048	0	1	COVER-3 MHZ FILTER	28480	08565-00048
A27	08565-60174	9	1	BANDWIDTH FILTER NO. 1 ASSEMBLY IDENTICAL TO A23, BUT USE A27 PREFIX	28480	08565-60174
				A27 MISCELLANEOUS PARTS		
	5001-5828	9	1	COVER-BANDWIDTH FILTER	28480	5001-5828

See introduction to this section for ordering information
*Indicates factory selected value

Table 6-3. Replaceable Parts

Reference Designation	HP Part Number	C D	Qty	Description	Mfr Code	Mfr Part Number
A28	08569-60073	1	1	VARIABLE GAIN ASSEMBLY	28480	08569-60073
A28C1	0160-2207	3	1	CAPACITOR-FXD 300PF +-5% 300VDC MICA	28480	0160-2207
A28C2	0140-0195	2	1	CAPACITOR-FXD 130PF +-5% 300VDC MICA	72136	DM15F131J0300WV1CR
A28C3	0140-0198	5	1	CAPACITOR-FXD 200PF +-5% 300VDC MICA	72136	DM15F201J0300WV1CR
A28C4	0160-4554	7	39	CAPACITOR-FXD .01UF +-20% 50VDC CER	28480	0160-4554
A28C5	0160-4554	7		CAPACITOR-FXD .01UF +-20% 50VDC CER	28480	0160-4554
A28C6	0160-4554	7		CAPACITOR-FXD .01UF +-20% 50VDC CER	28480	0160-4554
A28C7	0160-4554	7		CAPACITOR-FXD .01UF +-20% 50VDC CER	28480	0160-4554
A28C8	0160-4554	7		CAPACITOR-FXD .01UF +-20% 50VDC CER	28480	0160-4554
A28C9	0160-4554	7		CAPACITOR-FXD .01UF +-20% 50VDC CER	28480	0160-4554
A28C10	0160-4554	7		CAPACITOR-FXD .01UF +-20% 50VDC CER	28480	0160-4554
A28C11	0160-4554	7		CAPACITOR-FXD .01UF +-20% 50VDC CER	28480	0160-4554
A28C12	0160-4554	7		CAPACITOR-FXD .01UF +-20% 50VDC CER	28480	0160-4554
A28C13	0160-4554	7		CAPACITOR-FXD .01UF +-20% 50VDC CER	28480	0160-4554
A28C14	0160-2253	9	1	CAPACITOR-FXD 6.8PF +-.25PF 500VDC CER	28480	0160-2253
A28C15	0160-2236	8	1	CAPACITOR-FXD 1PF +-.25PF 500VDC CER	28480	0160-2236
A28C16	0160-4554	7		CAPACITOR-FXD .01UF +-20% 50VDC CER	28480	0160-4554
A28C17	0160-4554	7		CAPACITOR-FXD .01UF +-20% 50VDC CER	28480	0160-4554
A28C18	0160-4554	7		CAPACITOR-FXD .01UF +-20% 50VDC CER	28480	0160-4554
A28C19	0160-4554	7		CAPACITOR-FXD .01UF +-20% 50VDC CER	28480	0160-4554
A28C20	0160-4554	7		CAPACITOR-FXD .01UF +-20% 50VDC CER	28480	0160-4554
A28C21	0160-4554	7		CAPACITOR-FXD .01UF +-20% 50VDC CER	28480	0160-4554
A28C22	0160-4554	7		CAPACITOR-FXD .01UF +-20% 50VDC CER	28480	0160-4554
A28C23	0160-4554	7		CAPACITOR-FXD .01UF +-20% 50VDC CER	28480	0160-4554
A28C24	0160-4554	7		CAPACITOR-FXD .01UF +-20% 50VDC CER	28480	0160-4554
A28C25	0180-0374	3	1	CAPACITOR-FXD 10UF+-10% 20VDC TA	56289	150D106X9020B2
A28C26	0160-4554	7		CAPACITOR-FXD .01UF +-20% 50VDC CER	28480	0160-4554
A28C27	0160-4554	7		CAPACITOR-FXD .01UF +-20% 50VDC CER	28480	0160-4554
A28C28	0160-4554	7		CAPACITOR-FXD .01UF +-20% 50VDC CER	28480	0160-4554
A28C29	0160-4554	7		CAPACITOR-FXD .01UF +-20% 50VDC CER	28480	0160-4554
A28C30	0160-4554	7		CAPACITOR-FXD .01UF +-20% 50VDC CER	28480	0160-4554
A28C31	0160-4554	7		CAPACITOR-FXD .01UF +-20% 50VDC CER	28480	0160-4554
A28C32	0160-4554	7		CAPACITOR-FXD .01UF +-20% 50VDC CER	28480	0160-4554
A28C33	0160-4554	7		CAPACITOR-FXD .01UF +-20% 50VDC CER	28480	0160-4554
A28C34	0160-4554	7		CAPACITOR-FXD .01UF +-20% 50VDC CER	28480	0160-4554
A28C35	0160-4554	7		CAPACITOR-FXD .01UF +-20% 50VDC CER	28480	0160-4554
A28C36	0160-4554	7		CAPACITOR-FXD .01UF +-20% 50VDC CER	28480	0160-4554
A28C37	0160-4554	7		CAPACITOR-FXD .01UF +-20% 50VDC CER	28480	0160-4554
A28C38	0160-4554	7		CAPACITOR-FXD .01UF +-20% 50VDC CER	28480	0160-4554
A28C39	0160-4554	7		CAPACITOR-FXD .01UF +-20% 50VDC CER	28480	0160-4554
A28C40	0160-4554	7		CAPACITOR-FXD .01UF +-20% 50VDC CER	28480	0160-4554
A28C41	0160-4554	7		CAPACITOR-FXD .01UF +-20% 50VDC CER	28480	0160-4554
A28C42	0160-4554	7		CAPACITOR-FXD .01UF +-20% 50VDC CER	28480	0160-4554
A28C43	0160-4554	7		CAPACITOR-FXD .01UF +-20% 50VDC CER	28480	0160-4554
A28C44	0160-4554	7		CAPACITOR-FXD .01UF +-20% 50VDC CER	28480	0160-4554
A28C45	0160-4554	7		CAPACITOR-FXD .01UF +-20% 50VDC CER	28480	0160-4554
A28CR1	1901-0639	4	6	DIODE-PIN	28480	5082-3080
A28CR2	1901-0639	4		DIODE-PIN	28480	5082-3080
A28CR3	1901-0047	8	8	DIODE-SWITCHING 20V 75MA 10NS	28480	1901-0047
A28CR4	1901-0047	8		DIODE-SWITCHING 20V 75MA 10NS	28480	1901-0047
A28CR5	1901-0047	8		DIODE-SWITCHING 20V 75MA 10NS	28480	1901-0047
A28CR6	1901-0047	8		DIODE-SWITCHING 20V 75MA 10NS	28480	1901-0047
A28CR7	1901-0047	8		DIODE-SWITCHING 20V 75MA 10NS	28480	1901-0047
A28CR8	1901-0639	4		DIODE-PIN	28480	5082-3080
A28CR9	1901-0639	4		DIODE-PIN	28480	5082-3080
A28CR10	1910-0016	0	2	DIODE-GE 60V 60MA 1US DO-7	28480	1910-0016
A28CR11	1910-0016	0		DIODE-GE 60V 60MA 1US DO-7	28480	1910-0016
A28CR12	1901-0047	8		DIODE-SWITCHING 20V 75MA 10NS	28480	1901-0047
A28CR13	1901-0047	8		DIODE-SWITCHING 20V 75MA 10NS	28480	1901-0047
A28CR14	1901-0639	4		DIODE-PIN	28480	5082-3080
A28CR15	1901-0639	4		DIODE-PIN	28480	5082-3080
A28CR16	1901-0047	8		DIODE-SWITCHING 20V 75MA 10NS	28480	1901-0047
A28E1	9170-0029	3	5	CORE-SHIELDING BEAD	28480	9170-0029
A28E2	9170-0029	3		CORE-SHIELDING BEAD	28480	9170-0029
A28E3	9170-0029	3		CORE-SHIELDING BEAD	28480	9170-0029
A28E4	9170-0029	3		CORE-SHIELDING BEAD	28480	9170-0029
A28E5	9170-0029	3		CORE-SHIELDING BEAD	28480	9170-0029
A28L1	9100-1610	3	2	INDUCTOR RF-CH-MLD 150NH 20%	28480	9100-1610
A28L2	9100-1610	3		INDUCTOR RF-CH-MLD 150NH 20%	28480	9100-1610
A28L3	9100-1619	2	4	INDUCTOR RF-CH-MLD 6.8UH 10%	28480	9100-1619
A28L4	9140-0112	2	1	INDUCTOR RF-CH-MLD 4.7UH 10%	28480	9140-0112
A28L5	9100-1620	5	1	INDUCTOR RF-CH-MLD 15UH 10% .166DX.385LG	28480	9100-1620

See introduction to this section for ordering information
*Indicates factory selected value

Table 6-3. Replaceable Parts

Reference Designation	HP Part Number	C D	Qty	Description	Mfr Code	Mfr Part Number
A28L6	9100-1619	2		INDUCTOR RF-CH-MLD 6.8UH 10%	28480	9100-1619
A28L7	9100-1619	2		INDUCTOR RF-CH-MLD 6.8UH 10%	28480	9100-1619
A28L8	9100-1619	2		INDUCTOR RF-CH-MLD 6.8UH 10%	28480	9100-1619
A28L9	9100-1624	9	1	INDUCTOR RF-CH-MLD 30UH 5% .166DX.385LG	28480	9100-1624
A28L10	9100-1623	8	2	INDUCTOR RF-CH-MLD 27UH 5% .166DX.385LG	28480	9100-1623
A28L11	9100-1623	8		INDUCTOR RF-CH-MLD 27UH 5% .166DX.385LG	28480	9100-1623
A28Q1	1853-0007	7	3	TRANSISTOR PNP 2N3251 SI TO-18 PD=360MW	04713	2N3251
A28Q2	1853-0007	7		TRANSISTOR PNP 2N3251 SI TO-18 PD=360MW	04713	2N3251
A28Q3	1853-0007	7		TRANSISTOR PNP 2N3251 SI TO-18 PD=360MW	04713	2N3251
A28Q4	1854-0345	8	1	TRANSISTOR NPN 2N5179 SI TO-72 PD=200MW	04713	2N5179
A28Q5	1854-0404	0	1	TRANSISTOR NPN SI TO-18 PD=360MW	28480	1854-0404
A28Q6	1854-0247	9	4	TRANSISTOR NPN SI TO-39 PD=1W FT=800MHZ	28480	1854-0247
A28Q7	1854-0247	9		TRANSISTOR NPN SI TO-39 PD=1W FT=800MHZ	28480	1854-0247
A28Q8	1854-0247	9		TRANSISTOR NPN SI TO-39 PD=1W FT=800MHZ	28480	1854-0247
A28Q9	1854-0247	9		TRANSISTOR NPN SI TO-39 PD=1W FT=800MHZ	28480	1854-0247
A28R1	0757-0280	3	3	RESISTOR 1K 1% .125W F TC=0+-100	24546	C4-1/8-T0-1001-F
A28R2*	0698-3446	3	1	RESISTOR 383 1% .125W F TC=0+-100	24546	C4-1/8-T0-383R-F
A28R3	0683-0475	1	1	RESISTOR 4.7 5% .25W FC TC=-400/+500	01121	CB47G5
A28R4	0698-3440	7	5	RESISTOR 196 1% .125W F TC=0+-100	24546	C4-1/8-T0-196R-F
A28R5	0757-0418	9	4	RESISTOR 619 1% .125W F TC=0+-100	24546	C4-1/8-T0-619R-F
A28R6*	0698-3447	4	4	RESISTOR 422 1% .125W F TC=0+-100	24546	C4-1/8-T0-422R-F
A28R7	2100-3351	6	1	RESISTOR-TRMR 500 10% C SIDE-ADJ 1-TRN	28480	2100-3351
A28R8	0698-3440	7		RESISTOR 196 1% .125W F TC=0+-100	24546	C4-1/8-T0-196R-F
A28R9	0757-0438	3	2	RESISTOR 5.11K 1% .125W F TC=0+-100	24546	C4-1/8-T0-5111-F
A28R10	0757-0401	0	3	RESISTOR 100 1% .125W F TC=0+-100	24546	C4-1/8-T0-101-F
A28R11	0757-0438	3		RESISTOR 5.11K 1% .125W F TC=0+-100	24546	C4-1/8-T0-5111-F
A28R12	0757-0442	9	3	RESISTOR 10K 1% .125W F TC=0+-100	24546	C4-1/8-T0-1002-F
A28R13	0698-3157	3	1	RESISTOR 19.6K 1% .125W F TC=0+-100	24546	C4-1/8-T0-1962-F
A28R14	0698-3440	7		RESISTOR 196 1% .125W F TC=0+-100	24546	C4-1/8-T0-196R-F
A28R15	0698-0082	7	1	RESISTOR 464 1% .125W F TC=0+-100	24546	C4-1/8-T0-4640-F
A28R16	0757-0418	9		RESISTOR 619 1% .125W F TC=0+-100	24546	C4-1/8-T0-619R-F
A28R17	0757-0418	9		RESISTOR 619 1% .125W F TC=0+-100	24546	C4-1/8-T0-619R-F
A28R18	0698-0085	0	3	RESISTOR 2.61K 1% .125W F TC=0+-100	24546	C4-1/8-T0-2611-F
A28R19*	0698-3437	2	3	RESISTOR 133 1% .125W F TC=0+-100	24546	C4-1/8-T0-133R-F
A28R20	0757-0278	9	1	RESISTOR 1.78K 1% .125W F TC=0+-100	24546	C4-1/8-T0-1781-F
A28R21*	0698-4037	0	2	RESISTOR 46.4 1% .125W F TC=0+—100	28480	0698-4037
A28R22	0757-0428	1	3	RESISTOR 1.62K 1% .125W F TC=0+-100	24546	C4-1/8-T0-1621-F
A28R23*	0698-8819	4	1	RESISTOR 3.83 1% .125W F TC=0+-100	28480	0698-8819
A28R24	0757-0428	1		RESISTOR 1.62K 1% .125W F TC=0+-100	24546	C4-1/8-T0-1621-F
A28R25	0698-3158	4	1	RESISTOR 23.7K 1% .125W F TC=0+-100	24546	C4-1/8-T0-2372-F
A28R26	0757-0346	2	3	RESISTOR 10 1% .125W F TC=0+-100	24546	C4-1/8-T0-10R0-F
A28R27	0698-3440	7		RESISTOR 196 1% .125W F TC=0+-100	24546	C4-1/8-T0-196R-F
A28R28	0757-0418	9		RESISTOR 619 1% .125W F TC=0+-100	24546	C4-1/8-T0-619R-F
A28R29	0757-0444	1	1	RESISTOR 12.1K 1% .125W F TC=0+-100	24546	C4-1/8-T0-1212-F
A28R30	0698-0085	0		RESISTOR 2.61K 1% .125W F TC=0+-100	24546	C4-1/8-T0-2611-F
A28R31	0698-3440	7		RESISTOR 196 1% .125W F TC=0+-100	24546	C4-1/8-T0-196R-F
A28R32*	0698-3437	2		RESISTOR 133 1% .125W F TC=0+-100	24546	C4-1/8-T0-133R-F
A28R33*	0698-3437	2		RESISTOR 133 1% .125W F TC=0+-100	24546	C4-1/8-T0-133R-F
A28R34	0698-0085	0		RESISTOR 2.61K 1% .125W F TC=0+-100	24546	C4-1/8-T0-2611-F
A28R35	0757-0442	9		RESISTOR 10K 1% .125W F TC=0+-100	24546	C4-1/8-T0-1002-F
A28R36	0698-3260	9	1	RESISTOR 464K 1% .125W F TC=0+-100	28480	0698-3260
A28R37	0757-0346	2		RESISTOR 10 1% .125W F TC=0+-100	24546	C4-1/8-T0-10R0-F
A28R38	0757-0274	5	1	RESISTOR 1.21K 1% .125W F TC=0+-100	24546	C4-1/8-T0-1211-F
A28R39	0698-0083	8	1	RESISTOR 1.96K 1% .125W F TC=0+-100	24546	C4-1/8-T0-1961-F
A28R40	0757-0416	7	1	RESISTOR 511 1% .125W F TC=0+-100	24546	C4-1/8-T0-511R-F
A28R41	0757-0401	0		RESISTOR 100 1% .125W F TC=0+-100	24546	C4-1/8-T0-101-F
A28R42	0698-3447	4		RESISTOR 422 1% .125W F TC=0+-100	24546	C4-1/8-T0-422R-F
A28R43	0757-0346	2		RESISTOR 10 1% .125W F TC=0+-100	24546	C4-1/8-T0-10R0-F
A28R44	0698-3447	4		RESISTOR 422 1% .125W F TC=0+-100	24546	C4-1/8-T0-422R-F
A28R45	0757-0280	3		RESISTOR 1K 1% .125W F TC=0+-100	24546	C4-1/8-T0-1001-F
A28R46	0757-0417	8	1	RESISTOR 562 1% .125W F TC=0+-100	24546	C4-1/8-T0-562R-F
A28R47	0757-0280	3		RESISTOR 1K 1% .125W F TC=0+-100	24546	C4-1/8-T0-1001-F
A28R48	0757-0442	9		RESISTOR 10K 1% .125W F TC=0+-100	24546	C4-1/8-T0-1002-F
A28R49	0698-3447	4		RESISTOR 422 1% .125W F TC=0+-100	24546	C4-1/8-T0-422R-F
A28R50	0757-0401	0		RESISTOR 100 1% .125W F TC=0+-100	24546	C4-1/8-T0-101-F
A28R51	0757-0428	1		RESISTOR 1.62K 1% .125W F TC=0+-100	24546	C4-1/8-T0-1621-F
A28R52	0698-4037	0		RESISTOR 46.4 1% .125W F TC=0+-100	24546	C4-1/8-T0-46R4-F
A28S1	3101-2190	2	1	SWITCH-SL DPDT MINTR 1A 125VAC PC	28480	3101-2190
A28TP1	1251-0600	0	1	CONNECTOR-SGL CONT PIN 1.14-MM-BSC-SZ SQ	28480	1251-0600
A28VR1	1902-3048	7	1	DIODE-ZNR 3.48V 5% DO-35 PD=.4W	28480	1902-3048
A28VR2	1902-0048	1	1	DIODE-ZNR 6.81V 5% DO-35 PD=.4W	28480	1902-0048

See introduction to this section for ordering information
*Indicates factory selected value

Table 6-3. Replaceable Parts

Reference Designation	HP Part Number	C D	Qty	Description	Mfr Code	Mfr Part Number
A29	08569-60068	4	1	RF-1F MOTHERBOARD ASSEMBLY	28480	08569-60068
A29C1	0160-4297	5	10	CAPACITOR-FXD .022UF +80-20% 100VDC CER	56289	C023F101H223ZS22-CDH
A29C2	0160-4297	5		CAPACITOR-FXD .022UF +80-20% 100VDC CER	56289	C023F101H223ZS22-CDH
A29C3	0160-4297	5		CAPACITOR-FXD .022UF +80-20% 100VDC CER	56289	C023F101H223ZS22-CDH
A29C4	0160-4297	5		CAPACITOR-FXD .022UF +80-20% 100VDC CER	56289	C023F101H223ZS22-CDH
A29C5	0160-4297	5		CAPACITOR-FXD .022UF +80-20% 100VDC CER	56289	C023F101H223ZS22-CDH
A29C6	0160-4297	5		CAPACITOR-FXD .022UF +80-20% 100VDC CER	56289	C023F101H223ZS22-CDH
A29C7	0160-4830	2	1	CAPACITOR-FXD 2200PF +-10% 100VDC CER	28480	0160-4830
A29C8	0160-4297	5		CAPACITOR-FXD .022UF +80-20% 100VDC CER	56289	C023F101H223ZS22-CDH
A29C9	0160-4297	5		CAPACITOR-FXD .022UF +80-20% 100VDC CER	56289	C023F101H223ZS22-CDH
A29C10	0160-4297	5		CAPACITOR-FXD .022UF +80-20% 100VDC CER	56289	C023F101H223ZS22-CDH
A29C11	0160-4297	5		CAPACITOR-FXD .022UF +80-20% 100VDC CER	56289	C023F101H223ZS22-CDH
A29C12	0180-0097	7	1	CAPACITOR-FXD 47UF+-10% 35VDC TA	56289	150D476X9035S2
A29C13	0180-0228	6	1	CAPACITOR-FXD 22UF+-10% 15VDC TA	56289	150D226X9015B2
A29C14	0160-0574	3	7	CAPACITOR-FXD .022UF +-20% 100VDC CER	28480	0160-0574
A29C15	0160-0574	3		CAPACITOR-FXD .022UF +-20% 100VDC CER	28480	0160-0574
A29C16	0160-0574	3		CAPACITOR-FXD .022UF +-20% 100VDC CER	28480	0160-0574
A29C17	0160-0574	3		CAPACITOR-FXD .022UF +-20% 100VDC CER	28480	0160-0574
A29C18	0160-0574	3		CAPACITOR-FXD .022UF +-20% 100VDC CER	28480	0160-0574
A29C19	0160-0574	3		CAPACITOR-FXD .022UF +-20% 100VDC CER	28480	0160-0574
A29C20	0160-0574	3		CAPACITOR-FXD .022UF +-20% 100VDC CER	28480	0160-0574
A29CR1	1901-0050	3	4	DIODE-SWITCHING 80V 200MA 2NS DO-35	28480	1901-0050
A29CR2	1901-0050	3		DIODE-SWITCHING 80V 200MA 2NS DO-35	28480	1901-0050
A29CR3	1901-0050	3		DIODE-SWITCHING 80V 200MA 2NS DO-35	28480	1901-0050
A29CR4	1901-0050	3		DIODE-SWITCHING 80V 200MA 2NS DO-35	28480	1901-0050
A29J1	1251-4458	4	1	CONNECTOR 50-PIN M RECTANGULAR	28480	1251-4458
A29J2	1251-4742	9	1	CONNECTOR 34-PIN M POST TYPE	28480	1251-4742
A29J3	1251-4736	1	1	CONNECTOR 26-PIN M RECTANGULAR	28480	1251-4736
A29J4	1200-0508	0	1	SOCKET-IC 14-CONT DIP-SLDR	28480	1200-0508
A29J5	1251-7022	4	1	CONNECTOR-PC 10 MIR	28480	1251-7022
A29J6	1250-0257	1	2	CONNECTOR-RF SMB M PC 50-OHM	28480	1250-0257
A29J7	1250-0257	1		CONNECTOR-RF SMB M PC 50-OHM	28480	1250-0257
A29MP1	01801-01206	7	3	BRACKET	28480	01801-01206
A29MP2	0361-0010	8	2	RIVET-AL .123D X .219L	28480	0361-0010
A29MP3	0361-0078	8	1	RIVET-AL .123D X .188L	28480	0361-0078
A29R1	0698-3442	9	1	RESISTOR 237 1% .125W F TC=0+-100	24546	C4-1/8-T0-237R-F
A29R2	0757-0395	1	1	RESISTOR 56.2 1% .125W F TC=0+-100	24546	C4-1/8-T0-56R2-F
A29R3	0698-3392	8	1	RESISTOR 23.7 1% .5W F TC=0+-100	28480	0698-3392
A29R4	0757-0464	5	1	RESISTOR 90.9K 1% .125W F TC=0+-100	24546	C4-1/8-T0-9092-F
A29R5	0757-0440	7	1	RESISTOR 7.5K 1% .125W F TC=0+-100	24546	C4-1/8-T0-7501-F
A29R6	0757-0401	0	2	RESISTOR 100 1% .125W F TC=0+-100	24546	C4-1/8-T0-101-F
A29R7	0757-0401	0		RESISTOR 100 1% .125W F TC=0+-100	24546	C4-1/8-T0-101-F
A29R8	0757-0346	2	2	RESISTOR 10 1% .125W F TC=0+-100	24546	C4-1/8-T0-10R0-F
A29R9	0757-0346	2		RESISTOR 10 1% .125W F TC=0+-100	24546	C4-1/8-T0-10R0-F
A29R10	0757-0438	3	1	RESISTOR 5.11K 1% .125W F TC=0+-100	24546	C4-1/8-T0-5111-F
A29R11	0698-7236	7	7	RESISTOR 1K 1% .05W F TC=0+-100	24546	C3-1/8-T0-1001-F
A29R12	0698-7236	7		RESISTOR 1K 1% .05W F TC=0+-100	24546	C3-1/8-T0-1001-F
A29R13	0698-7236	7		RESISTOR 1K 1% .05W F TC=0+-100	24546	C3-1/8-T0-1001-F
A29R14	0698-7236	7		RESISTOR 1K 1% .05W F TC=0+-100	24546	C3-1/8-T0-1001-F
A29R15	0698-7236	7		RESISTOR 1K 1% .05W F TC=0+-100	24546	C3-1/8-T0-1001-F
A29R16	0698-7236	7		RESISTOR 1K 1% .05W F TC=0+-100	24546	C3-1/8-T0-1001-F
A29R17	0698-7236	7		RESISTOR 1K 1% .05W F TC=0+-100	24546	C3-1/8-T0-1001-F
A29R18	0757-0199	3	1	RESISTOR 21.5K 1% .125W F TC=0+-100	24546	C4-1/8-T0-2152-F
A29XA1-						
A29XA10				NOT ASSIGNED		
A29XA11	1251-2035	9	5	CONNECTOR-PC EDGE 15-CONT/ROW 2-ROWS	28480	1251-2035
A29XA12	1251-2035	9		CONNECTOR-PC EDGE 15-CONT/ROW 2-ROWS	28480	1251-2035
A29XA13	1251-2035	9		CONNECTOR-PC EDGE 15-CONT/ROW 2-ROWS	28480	1251-2035
A29XA14	1251-2035	9		CONNECTOR-PC EDGE 15-CONT/ROW 2-ROWS	28480	1251-2035
A29XA15	1251-2035	9		CONNECTOR-PC EDGE 15-CONT/ROW 2-ROWS	28480	1251-2035
A29XA16	1251-1365	6	13	CONNECTOR-PC EDGE 22-CONT/ROW 2-ROWS	28480	1251-1365
A29XA16	1251-0472	4	1	CONNECTOR-PC EDGE 6-CONT/ROW 2-ROWS	28480	1251-0472
A29XA17	1251-1365	6		CONNECTOR-PC EDGE 22-CONT/ROW 2-ROWS	28480	1251-1365
A29XA18	1251-1365	6		CONNECTOR-PC EDGE 22-CONT/ROW 2-ROWS	28480	1251-1365
A29XA19	1251-1365	6		CONNECTOR-PC EDGE 22-CONT/ROW 2-ROWS	28480	1251-1365
A29XA20	1251-1365	6		CONNECTOR-PC EDGE 22-CONT/ROW 2-ROWS	28480	1251-1365
A29XA21	1251-1365	6		CONNECTOR-PC EDGE 22-CONT/ROW 2-ROWS	28480	1251-1365
A29XA22	1251-1365	6		CONNECTOR-PC EDGE 22-CONT/ROW 2-ROWS	28480	1251-1365
A29XA23	1251-1365	6		CONNECTOR-PC EDGE 22-CONT/ROW 2-ROWS	28480	1251-1365
A29XA24	1251-1365	6		CONNECTOR-PC EDGE 22-CONT/ROW 2-ROWS	28480	1251-1365
A29XA25	1251-1365	6		CONNECTOR-PC EDGE 22-CONT/ROW 2-ROWS	28480	1251-1365
A29XA26	1251-1365	6		CONNECTOR-PC EDGE 22-CONT/ROW 2-ROWS	28480	1251-1365
A29XA27	1251-1365	6		CONNECTOR-PC EDGE 22-CONT/ROW 2-ROWS	28480	1251-1365

See introduction to this section for ordering information
*Indicates factory selected value

Table 6-3. Replaceable Parts

Reference Designation	HP Part Number	C D	Qty	Description	Mfr Code	Mfr Part Number
A29XA28	1251-1365	6		CONNECTOR-PC EDGE 22-CONT/ROW 2-ROWS	28480	1251-1365
A30	5086-7720	2		FIRST MIXER ASSEMBLY	28480	5086-7720
A31	5086-7350	4	1	YIG-TUNED OSCILLATOR ASSY (2-4.5 GHZ)	28480	5086-7350
	5086-6350	2		RESTORED 5086-7350,REQUIRES EXCHANGE	28480	5086-6350
A32	0960-0473	7	1	YIG-TUNED FILTER ASSY (1.7-22 GHZ)	28480	0960-0473
A33	5086-7283	2	1	LIMITER (0-1.8 GHZ)	28480	5086-7283
A34	5086-7365	1	1	RF ATTENUATOR ASSEMBLY	28480	5086-7365
	5086-6365	9	1	RESTORED 5086-7365,REQUIRES EXCHANGE	28480	5086-6365

See introduction to this section for ordering information
*Indicates factory selected value

Table 6-3. Replaceable Parts

Reference Designation	HP Part Number	C D	Qty	Description	Mfr Code	Mfr Part Number
A35	08565-60009	9	1	SECOND CONVERTER ASSEMBLY	28480	08565-60009
A35C1- A35C4			4	TUNED CAVITY (P/O A35MP1)		
A35C5	0160-3036	8	2	CAPACITOR-FDTHRU 5000PF +80 -20% 200V	28480	0160-3036
A35C6	0160-3036	8		CAPACITOR-FDTHRU 5000PF +80 -20% 200V	28480	0160-3036
A35C7	0160-4959	6	1	CAPACITOR-FDTHRU 10PF 5% 200V CER	33095	54-713-002-X5E-100J
A35C8	0140-0075	7	1	CAPACITOR-FDTHRU 22PF 10% 500V MICA	72982	666-053-01A0-220K
A35CR1	1901-0950	2	1	DIODE-SM SIG SCHOTTKY	28480	1901-0950
A35J1	1250-1157	2	1	CONNECTOR-RF SMA FEM THD-HOLE 50-OHM	28480	1250-1157
A35J2	1250-1435	9	1	CONN:RF: 500 OHM: SMC	28480	1250-1435
A35J3	1250-0829	3	1	CONNECTOR-RF SMC M SGL-HOLE-FR 50-OHM	28480	1250-0829
A35L1	08558-00034	5	1	COUPLING LOOP,INPUT	28480	08558-00034
A35L2	08558-00033	4	2	COUPLING LOOP-FILTER	28480	08558-00033
A35L3	08558-00033	4		COUPLING LOOP,FILTER	28480	08558-00033
A35L4	9100-2255	4	1	INDUCTOR RF-CH-MLD 470NH 10% .105DX.26LG	28480	9100-2255
A35L5	08565-80003	5	1	COIL-SECOND CONVERTER OUT	28480	08565-80003
A35MP1	08565-20067	5	1	CAVITY BLOCK, SECOND CONVERTER NSR - MATCHED TO A35MP6	28480	08565-20067
A35MP2				NOT ASSIGNED		
A35MP3	08565-20092	6	1	CAPACITOR-DIELECTRIC	28480	08565-20092
A35MP4	08565-20068	6	1	CAPACITOR-INNER ELEMENT	28480	08565-20068
A35MP5	08558-00032	3	1	MOUNTING TAB-MIXER DIODE	28480	08558-00032
A35MP6	08565-00079	7	1	OSCILLATOR HOUSING/SECOND CONV. COVER NSR - MATCHED TO A35MP1	28480	08565-00079
A35MP7	3030-0397	6	4	SCREW-SET 10-32 1-IN-LG FLAT-PT BRS	00000	ORDER BY DESCRIPTION
A35MP8	3030-0397	6		SCREW-SET 10-32 1-IN-LG FLAT-PT BRS	00000	ORDER BY DESCRIPTION
A35MP9	3030-0397	6		SCREW-SET 10-32 1-IN-LG FLAT-PT BRS	00000	ORDER BY DESCRIPTION
A35MP10	3030-0397	6		SCREW-SET 10-32 1-IN-LG FLAT-PT BRS	00000	ORDER BY DESCRIPTION
A35MP11	0380-0573	8	1	STANDOFF-HEX .625-IN-LG 10-32THD	00000	ORDER BY DESCRIPTION
A35MP12	3030-0422	8		SCREW-SKT HD CAP 0-80 .188-IN-LG SST-302	00000	ORDER BY DESCRIPTION
A35MP13	3030-0422	8		SCREW-SKT HD CAP 0-80 .188-IN-LG SST-302	00000	ORDER BY DESCRIPTION
A35MP14	3030-0422	8		SCREW-SKT HD CAP 0-80 .188-IN-LG SST-302	00000	ORDER BY DESCRIPTION
A35MP15	3030-0422	8		SCREW-SKT HD CAP 0-80 .188-IN-LG SST-302	00000	ORDER BY DESCRIPTION
A35MP16	3030-0422	8		SCREW-SKT HD CAP 0-80 .188-IN-LG SST-302	00000	ORDER BY DESCRIPTION
A35MP17	3030-0422	8		SCREW-SKT HD CAP 0-80 .188-IN-LG SST-302	00000	ORDER BY DESCRIPTION
A35MP18	2200-0151	0	1	SCREW-MACH 4-40 .75-IN-LG PAN-HD-POZI	00000	ORDER BY DESCRIPTION
A35MP19	2740-0001	3	3	NUT-HEX-DBL-CHAM 10-32-THD .109-IN-THK	00000	ORDER BY DESCRIPTION
A35MP20	2740-0001	3		NUT-HEX-DBL-CHAM 10-32-THD .109-IN-THK	00000	ORDER BY DESCRIPTION
A35MP21	2740-0001	3		NUT-HEX-DBL-CHAM 10-32-THD .109-IN-THK	00000	ORDER BY DESCRIPTION
A35MP22	08558-20074	5	1	INSULATOR-COUPLING POST	28480	08558-20074
A35MP23	08565-00058	2	1	COVER-OSCILLATOR HOUSING	28480	08565-00058
A35R1	0757-0346	2	1	RESISTOR 10 1% .125W F TC=0+-100	24546	C4-1/8-T0-10R0-F
				A35 MISCELLANEOUS PARTS		
	2190-0124	4	2	WASHER-LK INTL T NO. 10 .195-IN-ID	28480	2190-0124
	2200-0105	4	2	SCREW-MACH 4-40 .312-IN-LG PAN-HD-POZI	00000	ORDER BY DESCRIPTION
	2200-0107	6	16	SCREW-MACH 4-40 .375-IN-LG PAN-HD-POZI	00000	ORDER BY DESCRIPTION
	2200-0113	4	2	SCREW-MACH 4-40 .625-IN-LG PAN-HD-POZI	00000	ORDER BY DESCRIPTION
	2200-0119	0	8	SCREW-MACH 4-40 1-IN-LG PAN-HD-POZI	00000	ORDER BY DESCRIPTION
	2200-0171	4	1	SCREW-MACH 4-40 .75-IN-LG 82 DEG	00000	ORDER BY DESCRIPTION
	2950-0078	9	1	NUT-HEX-DBL-CHAM 10-32-THD .067-IN-THK	28480	2950-0078
	3050-0176	1	3	WASHER-FL MTLC NO. 8 .168-IN-ID	28480	3050-0176
	0360-0002	6	1	TERMINAL-SLDR LUG PL-MTG FOR-#2-SCR	28480	0360-0002
	0520-0173	2	3	SCREW-MACH 2-56 .168-IN-LG PAN-HD-POZI	00000	ORDER BY DESCRIPTION
	3030-0422	8	7	SCREW-SKT HD CAP 0-80 .188-IN-LG SST-302	00000	ORDER BY DESCRIPTION
	3050-0003	3	1	WASHER-FL NM NO. 6 .141-IN-ID .375-IN-OD	28480	3050-0003
A35A1	08558-60028	3	1	SECOND CONVERTER OSCILLATOR ASSEMBLY	28480	08558-60028
A35A1Q1	5086-4218	7	1	TC21 IN TO-72 PKG	28480	5086-4218
A35A1R1	0683-4705	8	1	RESISTOR 47 5% .25W FC TC=-400/+500	01121	CB4705
A35A1R2	0683-2715	6	1	RESISTOR 270 5% .25W FC TC=-400/+600	01121	CB2715
A35A2	08565-60010	2	1	SECOND CONVERTER FILTER ASSEMBLY	28480	08565-60010
A35A2C1	0180-0098	8	1	CAPACITOR-FXD 100UF+-20% 20VDC TA	56289	150D107X0020S2
A35A2C2	0180-2208	6	1	CAPACITOR-FXD 220UF+-10% 10VDC TA	56289	150D227X9010S2
A35A2CR1	1901-0050	3	1	DIODE-SWITCHING 80V 200MA 2NS DO-35	28480	1901-0050
A35A2Q1	1853-0007	7	1	TRANSISTOR PNP 2N3251 SI TO-18 PD=360MW	04713	2N3251

See introduction to this section for ordering information
*Indicates factory selected value

Table 6-3. Replaceable Parts

Reference Designation	HP Part Number	C D	Qty	Description	Mfr Code	Mfr Part Number
A35A2R1	0698-3132	4	2	RESISTOR 261 1% .125W F TC=0+-100	24546	C4-1/8-T0-2610-F
A35A2R2	0698-3132	4		RESISTOR 261 1% .125W F TC=0+-100	24546	C4-1/8-T0-2610-F
A35A2R3	0698-0083	8	1	RESISTOR 1.96K 1% .125W F TC=0+-100	24546	C4-1/8-T0-1961-F
A35A2VR1	1902-3256	9	1	DIODE-ZNR 23.7V 5% DO-35 PD=.4W	28480	1902-3256
				A35A2 MISCELLANEOUS PARTS		
	0380-0743	4	2	SPACER-RVT-ON .188-IN-LG .15-IN-ID	28480	0380-0743

See introduction to this section for ordering information
*Indicates factory selected value

Table 6-3. Replaceable Parts

Reference Designation	HP Part Number	C D	Qty	Description	Mfr Code	Mfr Part Number
A36	08565-60124	9	1	TUNING STABILIZER ASSEMBLY	28480	08565-60124
A36C1	0160-2437	1	6	CAPACITOR-FDTHRU 5000PF +80 -20% 200V	28480	0160-2437
A36C2	0160-2437	1		CAPACITOR-FDTHRU 5000PF +80 -20% 200V	28480	0160-2437
A36C3	0160-2437	1		CAPACITOR-FDTHRU 5000PF +80 -20% 200V	28480	0160-2437
A36C4	0160-2437	1		CAPACITOR-FDTHRU 5000PF +80 -20% 200V	28480	0160-2437
A36C5	0160-2437	1		CAPACITOR-FDTHRU 5000PF +80 -20% 200V	28480	0160-2437
A36C6	0160-2437	1		CAPACITOR-FDTHRU 5000PF +80 -20% 200V	28480	0160-2437
A36C7	0160-0970	3	1	CAPACITOR-FXD .47UF +-10% 80VDC POLYE	28480	0160-0970
A36MP1	08555-20045	7	1	HOUSING-TUNING STABILIZER	28480	08555-20045
A36MP2	08555-00013	7	1	COVER-PLS AMP, VCXO	28480	08555-00013
A36MP3	08555-00012	6	1	COVER-DISCRIMINATOR	28480	08555-00012
				A36 MISCELLANEOUS PARTS		
	0330-0178	4	1	GASKET RECT SIL-RBR .03-THK 1.5-LG	28480	0330-0178
	0360-0452	0	2	TERMINAL-SLDR LUG PL-MTG FOR-#10-SCR	28480	0360-0452
	0624-0078	6	17	SCREW-TPG 6-32 .375-IN-LG PAN-HD-POZI	28480	0624-0078
	0624-0227	7	5	SCREW-TPG 4-40 .25-IN-LG PAN-HD-POZI STL	00000	ORDER BY DESCRIPTION
	1250-1227	7	1	CONNECTOR-RF SMA M UNMTD 50-OHM	28480	1250-1227
	2190-0009	4	1	WASHER-LK INTL T NO. 8 .168-IN-ID	28480	2190-0009
	2200-0167	8	2	SCREW-MACH 4-40 .375-IN-LG 82 DEG	00000	ORDER BY DESCRIPTION
	6960-0059	1	4	PLUG-HOLE RND-HD FOR .187-D-HOLE NYL	28480	6960-0059
	8120-0229	9		CABLE-COAX 50-OHM 29PF/FT	28480	8120-0229
A36A1	08555-60057	5	1	DISCRIMINATOR ASSEMBLY	28480	08555-60057
A36A1C1	0160-2055	9	6	CAPACITOR-FXD .01UF +80-20% 100VDC CER	28480	0160-2055
A36A1C2	0180-0197	8	11	CAPACITOR-FXD 2.2UF+-10% 20VDC TA	56289	150D225X9020A2
A36A1C3	0180-1743	2	1	CAPACITOR-FXD .1UF+-10% 35VDC TA	56289	150D104X9035A2
A36A1C4	0180-0197	8		CAPACITOR-FXD 2.2UF+-10% 20VDC TA	56289	150D225X9020A2
A36A1C5	0180-0197	8		CAPACITOR-FXD 2.2UF+-10% 20VDC TA	56289	150D225X9020A2
A36A1C6	0160-3533	0	2	CAPACITOR-FXD 470PF +-5% 300VDC MICA	28480	0160-3533
A36A1C7	0160-3533	0		CAPACITOR-FXD 470PF +-5% 300VDC MICA	28480	0160-3533
A36A1C8	0160-3538	5	2	CAPACITOR-FXD 750PF +-5% 100VDC MICA	28480	0160-3538
A36A1C9	0160-3538	5		CAPACITOR-FXD 750PF +-5% 100VDC MICA	28480	0160-3538
A36A1C10	0180-0197	8		CAPACITOR-FXD 2.2UF+-10% 20VDC TA	56289	150D225X9020A2
A36A1C11	0160-2220	0	1	CAPACITOR-FXD 1200PF +-5% 300VDC MICA	28480	0160-2220
A36A1C12*	0160-2206	2	1	CAPACITOR-FXD 160PF +-5% 300VDC MICA	28480	0160-2206
A36A1C13	0180-0197	8		CAPACITOR-FXD 2.2UF+-10% 20VDC TA	56289	150D225X9020A2
A36A1C14	0160-2055	9		CAPACITOR-FXD .01UF +80-20% 100VDC CER	28480	0160-2055
A36A1C15	0160-2055	9		CAPACITOR-FXD .01UF +80-20% 100VDC CER	28480	0160-2055
A36A1C16	0160-2055	9		CAPACITOR-FXD .01UF +80-20% 100VDC CER	28480	0160-2055
A36A1C17	0160-2453	1	1	CAPACITOR-FXD .22UF +-10% 80VDC POLYE	28480	0160-2453
A36A1C18	0180-0197	8		CAPACITOR-FXD 2.2UF+-10% 20VDC TA	56289	150D225X9020A2
A36A1C19	0180-0197	8		CAPACITOR-FXD 2.2UF+-10% 20VDC TA	56289	150D225X9020A2
A36A1C20	0180-0197	8		CAPACITOR-FXD 2.2UF+-10% 20VDC TA	56289	150D225X9020A2
A36A1CR1	1901-0518	8	2	DIODE-SM SIG SCHOTTKY	28480	1901-0518
A36A1CR2	1901-0518	8		DIODE-SM SIG SCHOTTKY	28480	1901-0518
A36A1CR3	1902-3104	6	1	DIODE-ZNR 5.62V 5% DO-35 PD=.4W	28480	1902-3104
A36A1CR4	1901-0040	1	5	DIODE-SWITCHING 30V 50MA 2NS DO-35	28480	1901-0040
A36A1L1	9100-1646	5	2	INDUCTOR RF-CH-MLD 430UH 5% .2DX.45LG	28480	9100-1646
A36A1L2	9100-1647	6	1	INDUCTOR RF-CH-MLD 470UH 5% .2DX.45LG	28480	9100-1647
A36A1L3	9100-1646	5		INDUCTOR RF-CH-MLD 430UH 5% .2DX.45LG	28480	9100-1646
A36A1L4	9140-0318	0	1	INDUCTOR RF-CH-MLD 330UH 1% .166DX.385LG	28480	9140-0318
A36A1L5	9140-0210	1	3	INDUCTOR RF-CH-MLD 100UH 5% .166DX.385LG	28480	9140-0210
A36A1L6	9140-0210	1		INDUCTOR RF-CH-MLD 100UH 5% .166DX.385LG	28480	9140-0210
A36A1L7	9140-0210	1		INDUCTOR RF-CH-MLD 100UH 5% .166DX.385LG	28480	9140-0210
A36A1Q1	1855-0081	1	1	TRANSISTOR J-FET N-CHAN D-MODE SI	28480	1855-0081
A36A1Q2	1854-0882	8	7	TRANSISTOR NPN PD=300MW FT=200MHZ	28480	1854-0882
A36A1Q3	1854-0882	8		TRANSISTOR NPN PD=300MW FT=200MHZ	28480	1854-0882
A36A1Q4	1854-0882	8		TRANSISTOR NPN PD=300MW FT=200MHZ	28480	1854-0882
A36A1Q5	1854-0882	8		TRANSISTOR NPN PD=300MW FT=200MHZ	28480	1854-0882
A36A1Q6	1854-0019	3	3	TRANSISTOR NPN SI TO-18 PD=360MW	28480	1854-0019
A36A1Q7	1854-0019	3		TRANSISTOR NPN SI TO-18 PD=360MW	28480	1854-0019
A36A1Q8	1853-0034	0	2	TRANSISTOR PNP SI TO-18 PD=360MW	28480	1853-0034
A36A1Q9	1853-0034	0		TRANSISTOR PNP SI TO-18 PD=360MW	28480	1853-0034
A36A1Q10	1854-0045	5	1	TRANSISTOR NPN SI TO-18 PD=500MW	28480	1854-0045
A36A1R1	0683-1055	5	1	RESISTOR 1M 5% .25W FC TC=-800/+900	01121	CB1055
A36A1R2	0698-3162	0	1	RESISTOR 46.4K 1% .125W F TC=0+-100	24546	C4-1/8-T0-4642-F
A36A1R3	0698-3152	8	1	RESISTOR 3.48K 1% .125W F TC=0+-100	24546	C4-1/8-T0-3481-F
A36A1R4	0698-3150	6	1	RESISTOR 2.37K 1% .125W F TC=0+-100	24546	C4-1/8-T0-2371-F
A36A1R5	0698-3157	3	4	RESISTOR 19.6K 1% .125W F TC=0+-100	24546	C4-1/8-T0-1962-F

See introduction to this section for ordering information
*Indicates factory selected value

Table 6-3. Replaceable Parts

Reference Designation	HP Part Number	C D	Qty	Description	Mfr Code	Mfr Part Number
A36A1R6	0757-0280	3	5	RESISTOR 1K 1% .125W F TC=0+-100	24546	C4-1/8-T0-1001-F
A36A1R7	0757-0405	4	1	RESISTOR 162 1% .125W F TC=0+-100	24546	C4-1/8-T0-162R-F
A36A1R8	0698-0083	8	2	RESISTOR 1.96K 1% .125W F TC=0+-100	24546	C4-1/8-T0-1961-F
A36A1R9	0757-0424	7	1	RESISTOR 1.1K 1% .125W F TC=0+-100	24546	C4-1/8-T0-1101-F
A36A1R10	0757-0442	9	4	RESISTOR 10K 1% .125W F TC=0+-100	24546	C4-1/8-T0-1002-F
A36A1R11	0698-3157	3		RESISTOR 19.6K 1% .125W F TC=0+-100	24546	C4-1/8-T0-1962-F
A36A1R12	0757-0280	3		RESISTOR 1K 1% .125W F TC=0+-100	24546	C4-1/8-T0-1001-F
A36A1R13	0757-0401	0	6	RESISTOR 100 1% .125W F TC=0+-100	24546	C4-1/8-T0-101-F
A36A1R14*	0698-3434	9	1	RESISTOR 34.8 1% .125W F TC=0+-100	24546	C4-1/8-T0-34R8-F
A36A1R15	0757-0401	0		RESISTOR 100 1% .125W F TC=0+-100	24546	C4-1/8-T0-101-F
A36A1R16	0757-0401	0		RESISTOR 100 1% .125W F TC=0+-100	24546	C4-1/8-T0-101-F
A36A1R17	0698-3155	1	4	RESISTOR 4.64K 1% .125W F TC=0+-100	24546	C4-1/8-T0-4641-F
A36A1R18	0698-3155	1		RESISTOR 4.64K 1% .125W F TC=0+-100	24546	C4-1/8-T0-4641-F
A36A1R19	0698-3157	3		RESISTOR 19.6K 1% .125W F TC=0+-100	24546	C4-1/8-T0-1962-F
A36A1R20	0698-3157	3		RESISTOR 19.6K 1% .125W F TC=0+-100	24546	C4-1/8-T0-1962-F
A36A1R21	0757-0438	3	5	RESISTOR 5.11K 1% .125W F TC=0+-100	24546	C4-1/8-T0-5111-F
A36A1R22	0757-0438	3		RESISTOR 5.11K 1% .125W F TC=0+-100	24546	C4-1/8-T0-5111-F
A36A1R23	0757-0438	3		RESISTOR 5.11K 1% .125W F TC=0+-100	24546	C4-1/8-T0-5111-F
A36A1R24	0757-0401	0		RESISTOR 100 1% .125W F TC=0+-100	24546	C4-1/8-T0-101-F
A36A1R25	0757-0439	4	1	RESISTOR 6.81K 1% .125W F TC=0+-100	24546	C4-1/8-T0-6811-F
A36A1R26	0757-0442	9		RESISTOR 10K 1% .125W F TC=0+-100	24546	C4-1/8-T0-1002-F
A36A1R27	0698-3154	0	1	RESISTOR 4.22K 1% .125W F TC=0+-100	24546	C4-1/8-T0-4221-F
A36A1R28	0757-0442	9		RESISTOR 10K 1% .125W F TC=0+-100	24546	C4-1/8-T0-1002-F
A36A1R29	0757-0401	0		RESISTOR 100 1% .125W F TC=0+-100	24546	C4-1/8-T0-101-F
A36A1R30	0757-0442	9		RESISTOR 10K 1% .125W F TC=0+-100	24546	C4-1/8-T0-1002-F
A36A1R31	0757-0401	0		RESISTOR 100 1% .125W F TC=0+-100	24546	C4-1/8-T0-101-F
A36A1R32	0698-3155	1		RESISTOR 4.64K 1% .125W F TC=0+-100	24546	C4-1/8-T0-4641-F
A36A1U1	1821-0001	4	1	TRANSISTOR ARRAY 14-PIN PLSTC DIP	3L585	CA3046
A36A1U2	1820-0327	5	1	IC GATE TTL NAND QUAD 2-INP	01295	SN7401N
				A36A1 MISCELLANEOUS PARTS		
	1251-0600	0	8	CONNECTOR-SGL CONT PIN 1.14-MM-BSC-SZ SQ	28480	1251-0600
	1251-3214	8	1	CONTACT-CONN U/W-POST-TYPE FEM	28480	1251-3214
	1251-4803	3	1	CONNECTOR 1-PIN F POST TYPE	28480	1251-4803
A36A2	08555-60099	5	1	VOLTAGE CONTROLLED CRYSTAL OSC. ASSEMBLY	28480	08555-60099
A36A2C1	0160-3094	8	1	CAPACITOR-FXD .1UF +-10% 100VDC CER	28480	0160-3094
A36A2C2	0121-0452	4	1	CAPACITOR-V TRMR-AIR 1.3-5.4PF 175V	74970	187-0103-028
A36A2C3	0121-0451	3	2	CAPACITOR-V TRMR-AIR 1.7-11PF 175V	74970	187-0106-028
A36A2C4	0160-4299	7	1	CAPACITOR-FXD 2200PF +-20% 250VDC CER	56289	C067F251F222MS22-CDH
A36A2C5	0160-2055	9		CAPACITOR-FXD .01UF +80-20% 100VDC CER	28480	0160-2055
A36A2C7	0160-2055	9		CAPACITOR-FXD .01UF +80-20% 100VDC CER	28480	0160-2055
A36A2C8	0160-5115	8		ALTERNATE FOR 0160-5114	28480	0160-5115
A36A2C8*	0160-5114	7	1	CAPACITOR-FXD 240PF +-5% 300VDC GL	28480	0160-5114
A36A2C9	0160-2204	0	2	CAPACITOR-FXD 100PF +-5% 300VDC MICA	28480	0160-2204
A36A2C10	0160-2204	0		CAPACITOR-FXD 100PF +-5% 300VDC MICA	28480	0160-2204
A36A2C11	0180-0197	8		CAPACITOR-FXD 2.2UF+-10% 20VDC TA	56289	150D225X9020A2
A36A2C12	0180-0197	8		CAPACITOR-FXD 2.2UF+-10% 20VDC TA	56289	150D225X9020A2
A36A2C13	0180-0291	3	2	CAPACITOR-FXD 1UF+-10% 35VDC TA	56289	150D105X9035A2
A36A2C14	0180-0291	3		CAPACITOR-FXD 1UF+-10% 35VDC TA	56289	150D105X9035A2
A36A2C15	0180-0197	8		CAPACITOR-FXD 2.2UF+-10% 20VDC TA	56289	150D225X9020A2
A36A2C16	0121-0451	3		CAPACITOR-V TRMR-AIR 1.7-11PF 175V	74970	187-0106-028
A36A2C17	0180-0229	7	1	CAPACITOR-FXD 33UF+-10% 10VDC TA	56289	150D336X9010B2
A36A2C18*	0160-2202	8	1	CAPACITOR-FXD 75PF +-5% 300VDC MICA	28480	0160-2202
A36A2CR1	0122-0221	7	4	DIODE-VVC 100PF 10% C4/C25-MIN=2 BVR=30V	28480	0122-0221
A36A2CR2	0122-0221	7		DIODE-VVC 100PF 10% C4/C25-MIN=2 BVR=30V	28480	0122-0221
A36A2CR3	0122-0221	7		DIODE-VVC 100PF 10% C4/C25-MIN=2 BVR=30V	28480	0122-0221
A36A2CR4	0122-0221	7		DIODE-VVC 100PF 10% C4/C25-MIN=2 BVR=30V	28480	0122-0221
A36A2CR5	1901-0040	1		DIODE-SWITCHING 30V 50MA 2NS DO-35	28480	1901-0040
A36A2CR6	1901-0040	1		DIODE-SWITCHING 30V 50MA 2NS DO-35	28480	1901-0040
A36A2CR7	1901-0040	1		DIODE-SWITCHING 30V 50MA 2NS DO-35	28480	1901-0040
A36A2CR8	1901-0025	2	1	DIODE-GEN PRP 100V 200MA DO-7	28480	1901-0025
A36A2CR9	1901-0040	1		DIODE-SWITCHING 30V 50MA 2NS DO-35	28480	1901-0040
A36A2E1	9170-0029	3	1	CORE-SHIELDING BEAD	28480	9170-0029
A36A2L1	9100-1656	7	1	INDUCTOR RF-CH-MLD 1.3MH 5% .23DX.57LG	28480	9100-1656
A36A2L2	9100-3156	6	1	INDUCTOR RF-CH-MLD 47UH 5% X.598LG Q=65	28480	9100-3156
A36A2L3	9140-0137	1	3	INDUCTOR RF-CH-MLD 1MH 5% .2DX.45LG Q=60	28480	9140-0137
A36A2L4	9140-0137	1		INDUCTOR RF-CH-MLD 1MH 5% .2DX.45LG Q=60	28480	9140-0137
A36A2L5	9140-0137	1		INDUCTOR RF-CH-MLD 1MH 5% .2DX.45LG Q=60	28480	9140-0137
A36A2L6	9100-1648	7	1	INDUCTOR RF-CH-MLD 560UH 5% .2DX.45LG	28480	9100-1648
A36A2Q1	1854-0882	8		TRANSISTOR NPN PD=300MW FT=200MHZ	28480	1854-0882
A36A2Q2	1854-0882	8		TRANSISTOR NPN PD=300MW FT=200MHZ	28480	1854-0882
A36A2Q3	1854-0882	8		TRANSISTOR NPN PD=300MW FT=200MHZ	28480	1854-0882
A36A2Q4	1855-0020	8	1	TRANSISTOR J-FET N-CHAN D-MODE TO-18 SI	28480	1855-0020
A36A2Q5	1854-0019	3		TRANSISTOR NPN SI TO-18 PD=360MW	28480	1854-0019

See introduction to this section for ordering information
*Indicates factory selected value

Table 6-3. Replaceable Parts

Reference Designation	HP Part Number	C D	Qty	Description	Mfr Code	Mfr Part Number
A36A2Q6	1853-0010	2	1	TRANSISTOR PNP SI TO-18 PD=360MW	28480	1853-0010
A36A2Q7	1854-0332	3	1	TRANSISTOR NPN SI TO-39 PD=1W FT=800MHZ	28480	1854-0332
A36A2R1	0757-0280	3		RESISTOR 1K 1% .125W F TC=0+-100	24546	C4-1/8-T0-1001-F
A36A2R2	0757-0280	3		RESISTOR 1K 1% .125W F TC=0+-100	24546	C4-1/8-T0-1001-F
A36A2R3	0698-3247	2	1	RESISTOR 4.53K .25% .125W F TC=0+-50	28480	0698-3247
A36A2R4	0698-7828	3	1	RESISTOR 4.37K .25% .125W F TC=0+-100	19701	MF52C1/4-T0-4371-C
A36A2R5	0757-0428	1	2	RESISTOR 1.62K 1% .125W F TC=0+-100	24546	C4-1/8-T0-1621-F
A36A2R6	0757-0428	1		RESISTOR 1.62K 1% .125W F TC=0+-100	24546	C4-1/8-T0-1621-F
A36A2R7	0698-3155	1		RESISTOR 4.64K 1% .125W F TC=0+-100	24546	C4-1/8-T0-4641-F
A36A2R8				NOT ASSIGNED		
A36A2R9	0698-3153	9	1	RESISTOR 3.83K 1% .125W F TC=0+-100	24546	C4-1/8-T0-3831-F
A36A2R10	0757-0440	7	1	RESISTOR 7.5K 1% .125W F TC=0+-100	24546	C4-1/8-T0-7501-F
A36A2R11	0757-0438	3		RESISTOR 5.11K 1% .125W F TC=0+-100	24546	C4-1/8-T0-5111-F
A36A2R12	0757-0438	3		RESISTOR 5.11K 1% .125W F TC=0+-100	24546	C4-1/8-T0-5111-F
A36A2R13				NOT ASSIGNED		
A36A2R14				NOT ASSIGNED		
A36A2R15	0698-3151	7	1	RESISTOR 2.87K 1% .125W F TC=0+-100	24546	C4-1/8-T0-2871-F
A36A2R16	0757-0280	3		RESISTOR 1K 1% .125W F TC=0+-100	24546	C4-1/8-T0-1001-F
A36A2R17	0698-0083	8		RESISTOR 1.96K 1% .125W F TC=0+-100	24546	C4-1/8-T0-1961-F
A36A2R18	0683-1005	5	1	RESISTOR 10 5% .25W FC TC=-400/+500	01121	CB1005
A36A2R19	0757-0459	8	1	RESISTOR 56.2K 1% .125W F TC=0+-100	24546	C4-1/8-T0-5622-F
A36A2R20	0698-3408	7	1	RESISTOR 2.15K 1% .5W F TC=0+-100	28480	0698-3408
A36A2R21	0757-0444	1	2	RESISTOR 12.1K 1% .125W F TC=0+-100	24546	C4-1/8-T0-1212-F
A36A2R22	0757-0411	2	1	RESISTOR 332 1% .125W F TC=0+-100	24546	C4-1/8-T0-332R-F
A36A2R23	0698-3156	2	1	RESISTOR 14.7K 1% .125W F TC=0+-100	24546	C4-1/8-T0-1472-F
A36A2R24	0757-0444	1		RESISTOR 12.1K 1% .125W F TC=0+-100	24546	C4-1/8-T0-1212-F
A36A2R25	0757-0416	7	1	RESISTOR 511 1% .125W F TC=0+-100	24546	C4-1/8-T0-511R-F
A36A2R26*	0757-0460	1	1	RESISTOR 61.9K 1% .125W F TC=0+-100	24546	C4-1/8-T0-6192-F
A36A2R27*	0757-0199	3	1	RESISTOR 21.5K 1% .125W F TC=0+-100	24546	C4-1/8-T0-2152-F
A36A2RT1	0837-0075	4	1	THERMISTOR DISC 500-OHM TC=-3.9%/C-DEG	28480	0837-0075
A36A2U1	1826-0229	8	1	IC OP AMP LOW-DRIFT TO-99 PKG	06665	OP-05CJ
A36A2W1	08555-60018	8	1	CABLE ASSEMBLY-PULSE AMPLIFIER	28480	08555-60018
A36A2Y1	0410-0013	6	1	CRYSTAL-QUARTZ 1000.000 KHZ	28480	0410-0013
				A36A2 MISCELLANEOUS PARTS		
	0380-0843	5	3	STANDOFF-RVT-ON .125-IN-LG 4-40THD	00000	ORDER BY DESCRIPTION
	1200-0770	8	1	SOCKET-XTAL 2-CONT HC-6/U DIP-SLDR	28480	1200-0770
	1251-0600	0		CONNECTOR-SGL CONT PIN 1.14-MM-BSC-SZ SQ	28480	1251-0600
A36A3	5086-7162	6	1	SAMPLER- 2-4 GHZ	28480	5086-7162

See introduction to this section for ordering information
*Indicates factory selected value

Table 6-3. Replaceable Parts

Reference Designation	HP Part Number	C D	Qty	Description	Mfr Code	Mfr Part Number
A37	08565-60192	1	1	THIRD CONVERTER ASSEMBLY	28480	08565-60192
A37C1-			2			
A37C6	08565-20062	0	6	TUNING SCREW	28480	08565-20062
A37C7	0160-2437	1	5	CAPACITOR-FDTHRU 5000PF +80 -20% 200V	28480	0160-2437
A37C8	0160-2437	1		CAPACITOR-FDTHRU 5000PF +80 -20% 200V	28480	0160-2437
A37C9	0160-2437	1		CAPACITOR-FDTHRU 5000PF +80 -20% 200V	28480	0160-2437
A37C10	0160-2437	1		CAPACITOR-FDTHRU 5000PF +80 -20% 200V	28480	0160-2437
A37C11	0160-2437	1		CAPACITOR-FDTHRU 5000PF +80 -20% 200V	28480	0160-2437
A37C12	0140-0076	8	1	CAPACITOR-FDTHRU 330PF 10% 500V MICA	72982	666-053-01A0-331K
A37E1	9170-0029	3	1	CORE-SHIELDING BEAD	28480	9170-0029
A37E2-						
A37E7	08565-20063	1	6	CONTACT FINGER	28480	08565-20063
A37J1	1250-0829	3	5	CONNECTOR-RF SMC M SGL-HOLE-FR 50-OHM	28480	1250-0829
A37J2	1250-1435	9	1	CONN:RF: 500 OHM: SMC	28480	1250-1435
A37J3	1250-0829	3		CONNECTOR-RF SMC M SGL-HOLE-FR 50-OHM	28480	1250-0829
A37J4	1250-0829	3		CONNECTOR-RF SMC M SGL-HOLE-FR 50-OHM	28480	1250-0829
A37J5	1250-0829	3		CONNECTOR-RF SMC M SGL-HOLE-FR 50-OHM	28480	1250-0829
A37J6	1250-0829	3		CONNECTOR-RF SMC M SGL-HOLE-FR 50-OHM	28480	1250-0829
A37L1-						
A37L6	08565-60057	7	6	COIL/FILTER ASSEMBLY	28480	08565-60057
A37MP1	08565-20192	7	1	HOUSING-THIRD CONVERTER	28480	08565-20192
A37MP2	08565-00063	9	1	GASKET-THIRD CONVERTER	28480	08565-00063
A37MP3	08565-00122	1	1	COVER-THIRD CONVERTER	28480	08565-00122
				A37 MISCELLANEOUS PARTS		
	0360-0042	4	1	TERMINAL-SLDR LUG PL-MTG FOR-#6-SCR	28480	0360-0042
	0890-0098	3		TUBING-FLEX .032-ID TFE .016-WALL	28480	0890-0098
	2190-0124	4	5	WASHER-LK INTL T NO. 10 .195-IN-ID	28480	2190-0124
	2200-0103	2	44	SCREW-MACH 4-40 .25-IN-LG PAN-HD-POZI	00000	ORDER BY DESCRIPTION
	2260-0002	6	6	NUT-HEX-DBL-CHAM 4-40-THD .062-IN-THK	00000	ORDER BY DESCRIPTION
	2950-0007	4	6	NUT-HEX-DBL-CHAM 5/16-32-THD .094-IN-THK	00000	ORDER BY DESCRIPTION
	2950-0078	9	1	NUT-HEX-DBL-CHAM 10-32-THD .067-IN-THK	28480	2950-0078
	3050-0022	6	6	WASHER-FL MTLC 5/16 IN .318-IN-ID	28480	3050-0022
A37A1	08565-60014	6	1	THIRD CONVERTER AMPLIFIER ASSEMBLY	28480	08565-60014
A37A1C1	0160-3873	1	2	CAPACITOR-FXD 4.7PF +-.5PF 200VDC CER	28480	0160-3873
A37A1C2	0160-3878	6	5	CAPACITOR-FXD 1000PF +-20% 100VDC CER	28480	0160-3878
A37A1C3				NOT ASSIGNED		
A37A1C4	0160-3879	7	1	CAPACITOR-FXD .01UF +-20% 100VDC CER	28480	0160-3879
A37A1C5	0160-3878	6		CAPACITOR-FXD 1000PF +-20% 100VDC CER	28480	0160-3878
A37A1C6	0160-3873	1		CAPACITOR-FXD 4.7PF +-.5PF 200VDC CER	28480	0160-3873
A37A1E1	0360-0124	3	4	CONNECTOR-SGL CONT PIN .04-IN-BSC-SZ RND	28480	0360-0124
A37A1L1	9100-0346	0	1	INDUCTOR RF-CH-MLD 50NH 20% .105DX.26LG	28480	9100-0346
A37A1MP1	1200-0172	4	1	INSULATOR-XSTR DAP-GL	28480	1200-0172
A37A1Q1	5086-4218	7	1	TC21 IN TO-72 PKG	28480	5086-4218
A37A1Q2	1853-0007	7	2	TRANSISTOR PNP 2N3251 SI TO-18 PD=360MW	04713	2N3251
A37A1R1	0698-3449	6	1	RESISTOR 28.7K 1% .125W F TC=0+-100	24546	C4-1/8-T0-2872-F
A37A1R2	0698-3160	8	1	RESISTOR 31.6K 1% .125W F TC=0+-100	24546	C4-1/8-T0-3162-F
A37A1R3	0757-0442	9	1	RESISTOR 10K 1% .125W F TC=0+-100	24546	C4-1/8-T0-1002-F
A37A1R4	0757-0418	9	1	RESISTOR 619 1% .125W F TC=0+-100	24546	C4-1/8-T0-619R-F
A37A1R5	0757-0420	3	1	RESISTOR 750 1% .125W F TC=0+-100	24546	C4-1/8-T0-751-F
A37A1TP1	1251-0600	0	6	CONNECTOR-SGL CONT PIN 1.14-MM-BSC-SZ SQ	28480	1251-0600
A37A2	08565-60013	5	1	THIRD CONVERTER MIXER ASSEMBLY	28480	08565-60013
A37A2C1	0160-3890	2	1	CAPACITOR-FXD 68PF +-10% 100VDC CER	28480	0160-3890
A37A2CR1	1901-1085	6	2	DIODE-SM SIG SCHOTTKY	28480	1901-1085
A37A2CR2	1901-1085	6		DIODE-SM SIG SCHOTTKY	28480	1901-1085
A37A2E1	0360-0124	3		CONNECTOR-SGL CONT PIN .04-IN-BSC-SZ RND	28480	0360-0124
A37A2E2	0360-0124	3		CONNECTOR-SGL CONT PIN .04-IN-BSC-SZ RND	28480	0360-0124
A37A2L1	9100-2259	8	1	INDUCTOR RF-CH-MLD 1.5UH 10% .105DX.26LG	28480	9100-2259
A37A2L2	9100-2255	4	1	INDUCTOR RF-CH-MLD 470NH 10% .105DX.26LG	28480	9100-2255
A37A2L3	9100-2251	0	2	INDUCTOR RF-CH-MLD 220NH 10% .105DX.26LG	28480	9100-2251
A37A3	08565-60186	3	1	THIRD CONVERTER OSCILLATOR ASSEMBLY	28480	08565-60186

See introduction to this section for ordering information
*Indicates factory selected value

Table 6-3. Replaceable Parts

Reference Designation	HP Part Number	C D	Qty	Description	Mfr Code	Mfr Part Number
A37A3C1	0160-3456	6	13	CAPACITOR-FXD 1000PF +-10% 1KVDC CER	28480	0160-3456
A37A3C2	0160-3456	6		CAPACITOR-FXD 1000PF +-10% 1KVDC CER	28480	0160-3456
A37A3C3	0160-3878	6		CAPACITOR-FXD 1000PF +-20% 100VDC CER	28480	0160-3878
A37A3C4	0160-3875	3	1	CAPACITOR-FXD 22PF +-5% 200VDC CER 0+-30	28480	0160-3875
A37A3C5	0160-4516	1	1	CAPACITOR-FXD 15PF +-5% 200VDC CER 0+-30	28480	0160-4516
A37A3C6	0160-3456	6		CAPACITOR-FXD 1000PF +-10% 1KVDC CER	28480	0160-3456
A37A3C7	0160-3878	6		CAPACITOR-FXD 1000PF +-20% 100VDC CER	28480	0160-3878
A37A3C8	0160-3456	6		CAPACITOR-FXD 1000PF +-10% 1KVDC CER	28480	0160-3456
A37A3C9	0160-3878	6		CAPACITOR-FXD 1000PF +-20% 100VDC CER	28480	0160-3878
A37A3C10	0160-3456	6		CAPACITOR-FXD 1000PF +-10% 1KVDC CER	28480	0160-3456
A37A3C11	0160-3456	6		CAPACITOR-FXD 1000PF +-10% 1KVDC CER	28480	0160-3456
A37A3C12	0160-3876	4	1	CAPACITOR-FXD 47PF +-20% 200VDC CER	28480	0160-3876
A37A3C13	0160-2265	3	1	CAPACITOR-FXD 22PF +-5% 500VDC CER 0+-30	28480	0160-2265
A37A3C14	0160-2249	3	1	CAPACITOR-FXD 4.7PF +-.25PF 500VDC CER	28480	0160-2249
A37A3C15	0160-3456	6		CAPACITOR-FXD 1000PF +-10% 1KVDC CER	28480	0160-3456
A37A3C16	0160-3456	6		CAPACITOR-FXD 1000PF +-10% 1KVDC CER	28480	0160-3456
A37A3C17	0160-2055	9	2	CAPACITOR-FXD .01UF +80-20% 100VDC CER	28480	0160-2055
A37A3C18	0160-3456	6		CAPACITOR-FXD 1000PF +-10% 1KVDC CER	28480	0160-3456
A37A3C19	0160-3456	6		CAPACITOR-FXD 1000PF +-10% 1KVDC CER	28480	0160-3456
A37A3C20	0160-3456	6		CAPACITOR-FXD 1000PF +-10% 1KVDC CER	28480	0160-3456
A37A3C21	0160-2055	9		CAPACITOR-FXD .01UF +80-20% 100VDC CER	28480	0160-2055
A37A3C22	0160-3456	6		CAPACITOR-FXD 1000PF +-10% 1KVDC CER	28480	0160-3456
A37A3C23	0160-3456	6		CAPACITOR-FXD 1000PF +-10% 1KVDC CER	28480	0160-3456
A37A3C24	0160-2263	1	2	CAPACITOR-FXD 18PF +-5% 500VDC CER 0+-30	28480	0160-2263
A37A3C25	0160-2263	1		CAPACITOR-FXD 18PF +-5% 500VDC CER 0+-30	28480	0160-2263
A37A3C26	0160-2266	4	1	CAPACITOR-FXD 24PF +-5% 500VDC CER 0+-30	28480	0160-2266
A37A3C27	0160-2264	2	1	CAPACITOR-FXD 20PF +-5% 500VDC CER 0+-30	28480	0160-2264
A37A3CR1	1901-0639	4	3	DIODE-PIN	28480	5082-3080
A37A3CR2	1901-0639	4		DIODE-PIN	28480	5082-3080
A37A3CR3	1901-0639	4		DIODE-PIN	28480	5082-3080
A37A3CR4	1901-0539	3	2	DIODE-SM SIG SCHOTTKY	28480	1901-0539
A37A3CR5	1901-0539	3		DIODE-SM SIG SCHOTTKY	28480	1901-0539
A37A3E1	0360-0124	3		CONNECTOR-SGL CONT PIN .04-IN-BSC-SZ RND	28480	0360-0124
A37A3L1	9140-0158	6	4	INDUCTOR RF-CH-MLD 1UH 10% .105DX.26LG	28480	9140-0158
A37A3L2	9100-2247	4	3	INDUCTOR RF-CH-MLD 100NH 10% .105DX.26LG	28480	9100-2247
A37A3L3	9140-0158	6		INDUCTOR RF-CH-MLD 1UH 10% .105DX.26LG	28480	9140-0158
A37A3L4	08565-80001	3	1	COIL-150 NH	28480	08565-80001
A37A3L5	9140-0158	6		INDUCTOR RF-CH-MLD 1UH 10% .105DX.26LG	28480	9140-0158
A37A3L6	9140-0144	0	3	INDUCTOR RF-CH-MLD 4.7UH 10% .105DX.26LG	28480	9140-0144
A37A3L7	9140-0158	6		INDUCTOR RF-CH-MLD 1UH 10% .105DX.26LG	28480	9140-0158
A37A3L8	9100-2251	0		INDUCTOR RF-CH-MLD 220NH 10% .105DX.26LG	28480	9100-2251
A37A3L9	9140-0144	0		INDUCTOR RF-CH-MLD 4.7UH 10% .105DX.26LG	28480	9140-0144
A37A3L10	9140-0144	0		INDUCTOR RF-CH-MLD 4.7UH 10% .105DX.26LG	28480	9140-0144
A37A3L11	9100-2247	4		INDUCTOR RF-CH-MLD 100NH 10% .105DX.26LG	28480	9100-2247
A37A3L12	9100-2247	4		INDUCTOR RF-CH-MLD 100NH 10% .105DX.26LG	28480	9100-2247
A37A3MP1	1200-0173	5	1	INSULATOR-XSTR DAP-GL	28480	1200-0173
A37A3Q1	1854-0345	8	2	TRANSISTOR NPN 2N5179 SI TO-72 PD=200MW	04713	2N5179
A37A3Q2	1854-0345	8		TRANSISTOR NPN 2N5179 SI TO-72 PD=200MW	04713	2N5179
A37A3Q3	1854-0247	9	1	TRANSISTOR NPN SI TO-39 PD=1W FT=800MHZ	28480	1854-0247
A37A3Q4	1853-0007	7		TRANSISTOR PNP 2N3251 SI TO-18 PD=360MW	04713	2N3251
A37A3R1	0698-3150	6	1	RESISTOR 2.37K 1% .125W F TC=0+-100	24546	C4-1/8-T0-2371-F
A37A3R2	0698-0083	8	1	RESISTOR 1.96K 1% .125W F TC=0+-100	24546	C4-1/8-T0-1961-F
A37A3R3	0757-1094	9	2	RESISTOR 1.47K 1% .125W F TC=0+-100	24546	C4-1/8-T0-1471-F
A37A3R4	0757-0280	3	2	RESISTOR 1K 1% .125W F TC=0+-100	24546	C4-1/8-T0-1001-F
A37A3R5	0698-3153	9	1	RESISTOR 3.83K 1% .125W F TC=0+-100	24546	C4-1/8-T0-3831-F
A37A3R6	0698-3154	0	1	RESISTOR 4.22K 1% .125W F TC=0+-100	24546	C4-1/8-T0-4221-F
A37A3R7	0698-3444	1	3	RESISTOR 316 1% .125W F TC=0+-100	24546	C4-1/8-T0-316R-F
A37A3R8	0698-3447	4	2	RESISTOR 422 1% .125W F TC=0+-100	24546	C4-1/8-T0-422R-F
A37A3R9	0698-3447	4		RESISTOR 422 1% .125W F TC=0+-100	24546	C4-1/8-T0-422R-F
A37A3R10	0698-3438	3	1	RESISTOR 147 1% .125W F TC=0+-100	24546	C4-1/8-T0-147R-F
A37A3R11	0757-1094	9		RESISTOR 1.47K 1% .125W F TC=0+-100	24546	C4-1/8-T0-1471-F
A37A3R12	0698-3429	2	1	RESISTOR 19.6 1% .125W F TC=0+-100	03888	PME55-1/8-T0-19R6-F
A37A3R13	0757-0458	7	3	RESISTOR 51.1K 1% .125W F TC=0+-100	24546	C4-1/8-T0-5112-F
A37A3R14	0757-0458	7		RESISTOR 51.1K 1% .125W F TC=0+-100	24546	C4-1/8-T0-5112-F
A37A3R15	0757-0458	7		RESISTOR 51.1K 1% .125W F TC=0+-100	24546	C4-1/8-T0-5112-F
A37A3R16	0757-0279	0	3	RESISTOR 3.16K 1% .125W F TC=0+-100	24546	C4-1/8-T0-3161-F
A37A3R17	0757-0279	0		RESISTOR 3.16K 1% .125W F TC=0+-100	24546	C4-1/8-T0-3161-F
A37A3R18	0757-0279	0		RESISTOR 3.16K 1% .125W F TC=0+-100	24546	C4-1/8-T0-3161-F
A37A3R19	0757-0401	0	2	RESISTOR 100 1% .125W F TC=0+-100	24546	C4-1/8-T0-101-F
A37A3R20	0698-3433	8	1	RESISTOR 28.7 1% .125W F TC=0+-100	03888	PME55-1/8-T0-28R7-F
A37A3R21	0757-0276	7	1	RESISTOR 61.9 1% .125W F TC=0+-100	24546	C4-1/8-T0-6192-F
A37A3R22	0757-0401	0		RESISTOR 100 1% .125W F TC=0+-100	24546	C4-1/8-T0-101-F
A37A3R23	0698-3444	1		RESISTOR 316 1% .125W F TC=0+-100	24546	C4-1/8-T0-316R-F
A37A3R24	0698-0084	9	1	RESISTOR 2.15K 1% .125W F TC=0+-100	24546	C4-1/8-T0-2151-F
A37A3R25	0698-3444	1		RESISTOR 316 1% .125W F TC=0+-100	24546	C4-1/8-T0-316R-F

See introduction to this section for ordering information
*Indicates factory selected value

Table 6-3. Replaceable Parts

Reference Designation	HP Part Number	C D	Qty	Description	Mfr Code	Mfr Part Number
A37A3R26	0757-0280	3		RESISTOR 1K 1% .125W F TC=0+-100	24546	C4-1/8-T0-1001-F
A37A3R27	2100-1799	2	1	RESISTOR-TRMR 500 10% WW SIDE-ADJ 2C-TRN	02660	3810P-501
A37A3R28	0698-4037	0	1	RESISTOR 46.4 1% .125W F TC=0+-100	24546	C4-1/8-T0-46R4-F
A37A3TP1	1251-0600	0		CONNECTOR-SGL CONT PIN 1.14-MM-BSC-SZ SQ	28480	1251-0600
A37A3TP2	1251-0600	0		CONNECTOR-SGL CONT PIN 1.14-MM-BSC-SZ SQ	28480	1251-0600
A37A3TP3	1251-0600	0		CONNECTOR-SGL CONT PIN 1.14-MM-BSC-SZ SQ	28480	1251-0600
A37A3TP4	1251-0600	0		CONNECTOR-SGL CONT PIN 1.14-MM-BSC-SZ SQ	28480	1251-0600
A37A3TP5	1251-0600	0		CONNECTOR-SGL CONT PIN 1.14-MM-BSC-SZ SQ	28480	1251-0600
A37A3U1	1858-0004	4	1	TRANSISTOR ARRAY 12-PIN MET TO-101	3L585	CA3049
A37A3Y1	0410-1023	0	1	CRYSTAL-QUARTZ 99.333 MHZ	28480	0410-1023
A37A3Y2	0410-1024	1	1	CRYSTAL-QUARTZ 100.000 MHZ	28480	0410-1024
A37A3Y3	0410-1025	2	1	CRYSTAL-QUARTZ 117.30313 MHZ TO-5-HLDR	28480	0410-1025
A37A4	08565-60207	9	1	THIRD CONVERTER FILTER ASSEMBLY	28480	08565-60207
A37A4L1— A37A4L4	9140-0210	1	2	INDUCTOR RF-CH-MLD 100UH 5% .166DX.385LG	28480	9140-0210
A37A4MP2	0380-0743	4	2	SPACER-RVT-ON .188-IN-LG .15-IN-ID	28480	0380-0743
A38				NOT ASSIGNED		
A39				NOT ASSIGNED		

See introduction to this section for ordering information
*Indicates factory selected value

Table 6-3. Replaceable Parts

Reference Designation	HP Part Number	C D	Qty	Description	Mfr Code	Mfr Part Number
A40	08569-60020	8	1	POWER SUPPLY ASSEMBLY	28480	08569-60020
A40MP1	08569-00018	8	1	CHASSIS-POWER SUPPLY	28480	08569-00018
A40MP2	08569-00003	1	1	BRACKET-POWER CAP	28480	08569-00003
A40MP3	2420-0001	5	1	NUT-HEX-W/LKWR 6-32-THD .109-IN-THK	00000	ORDER BY DESCRIPTION
A40MP4	2360-0194	9	1	SCREW-MACH 6-32 .312-IN-LG 100 DEG	00000	ORDER BY DESCRIPTION
A40MP5	0360-0268	6	1	TERMINAL-SLDR LUG LK-MTG FOR-#6-SCR	28480	0360-0268
				A40 MISCELLANEOUS PARTS		
	2360-0121	2	3	SCREW-MACH 6-32 .5-IN-LG PAN-HD-POZI	00000	ORDER BY DESCRIPTION
	2360-0113	2	3	SCREW-MACH 6-32 .25-IN-LG PAN-HD-POZI	00000	ORDER BY DESCRIPTION
	2360-0333	8	6	SCREW-MACH 6-32 .25-IN-LG 100 DEG	28480	2360-0333
A40A1	08569-60034	4	1	RECTIFIER ASSEMBLY	28480	08569-60034
A40A1C1	0160-4256	6	6	CAPACITOR-FXD .047UF +-20% 200VDC CER	16546	CW30 B 473M
A40A1C2	0160-4256	6		CAPACITOR-FXD .047UF +-20% 200VDC CER	16546	CW30 B 473M
A40A1C3	0160-4256	6		CAPACITOR-FXD .047UF +-20% 200VDC CER	16546	CW30 B 473M
A40A1C4	0160-4256	6		CAPACITOR-FXD .047UF +-20% 200VDC CER	16546	CW30 B 473M
A40A1C5	0160-4256	6		CAPACITOR-FXD .047UF +-20% 200VDC CER	16546	CW30 B 473M
A40A1C6	0160-2055	9	7	CAPACITOR-FXD .01UF +80-20% 100VDC CER	28480	0160-2055
A40A1C7	0180-2736	5	1	CAPACITOR-FXD .015F+75-10% 15VDC AL	28480	0180-2736
A40A1C8	0160-2055	9		CAPACITOR-FXD .01UF +80-20% 100VDC CER	28480	0160-2055
A40A1C9	0180-2738	7	3	CAPACITOR-FXD 5800UF+75-10% 40VDC AL	28480	0180-2738
A40A1C10	0160-2055	9		CAPACITOR-FXD .01UF +80-20% 100VDC CER	28480	0160-2055
A40A1C11	0180-2738	7		CAPACITOR-FXD 5800UF+75-10% 40VDC AL	28480	0180-2738
A40A1C12	0160-2055	9		CAPACITOR-FXD .01UF +80-20% 100VDC CER	28480	0160-2055
A40A1C13	0180-2738	7		CAPACITOR-FXD 5800UF+75-10% 40VDC AL	28480	0180-2738
A40A1C14	0160-2055	9		CAPACITOR-FXD .01UF +80-20% 100VDC CER	28480	0160-2055
A40A1C15	0180-2737	6	1	CAPACITOR-FXD 2800UF+75-10% 75VDC AL	28480	0180-2737
A40A1C16	0180-0197	8	2	CAPACITOR-FXD 2.2UF+-10% 20VDC TA	56289	150D225X9020A2
A40A1CR1	1901-0935	3	4	DIODE-SCHOTTKY	28480	1901-0935
A40A1CR2	1901-0935	3		DIODE-SCHOTTKY	28480	1901-0935
A40A1CR3-						
A40A1CR18	1901-0662	3	18	DIODE-PWR RECT 100V 6A	04713	MR751
A40A1CR19	1901-0935	3		DIODE-SCHOTTKY	28480	1901-0935
A40A1CR20	1901-0935	3		DIODE-SCHOTTKY	28480	1901-0935
A40A1J1	1251-4739	4	1	CONNECTOR 17-PIN M POST TYPE	28480	1251-4739
A40A1MP1	0360-0353	0	4	BRACKET-RTANG .406-LG X .343-LG .312-WD	28480	0360-0353
A40A1MP2	0360-0353	0		BRACKET-RTANG .406-LG X .343-LG .312-WD	28480	0360-0353
A40A1MP3	0360-0353	0		BRACKET-RTANG .406-LG X .343-LG .312-WD	28480	0360-0353
A40A1MP4	0360-0353	0		BRACKET-RTANG .406-LG X .343-LG .312-WD	28480	0360-0353
A40A1MP5	0361-0004	0	4	RIVET-SEMITUB OVH .146 DIA .188LG	00000	ORDER BY DESCRIPTION
A40A1MP6	0361-0004	0		RIVET-SEMITUB OVH .146 DIA .188LG	00000	ORDER BY DESCRIPTION
A40A1MP7	0361-0004	0		RIVET-SEMITUB OVH .146 DIA .188LG	00000	ORDER BY DESCRIPTION
A40A1MP8	0361-0004	0		RIVET-SEMITUB OVH .146 DIA .188LG	00000	ORDER BY DESCRIPTION
A40A1Q1	1884-0261	0	9	THYRISTOR-SCR TO-220AB VRRM=100	28480	1884-0261
A40A1R1	0757-0280	3	1	RESISTOR 1K 1% .125W F TC=0+-100	24546	C4-1/8-T0-1001-F
A40A1R2	0757-0279	0	3	RESISTOR 3.16K 1% .125W F TC=0+-100	24546	C4-1/8-T0-3161-F
A40A1R3	0757-0279	0		RESISTOR 3.16K 1% .125W F TC=0+-100	24546	C4-1/8-T0-3161-F
A40A1R4	0757-0279	0		RESISTOR 3.16K 1% .125W F TC=0+-100	24546	C4-1/8-T0-3161-F
A40A1R5	0757-0833	2	1	RESISTOR 5.11K 1% .5W F TC=0+-100	28480	0757-0833
A40A1R6	0757-0401	0	8	RESISTOR 100 1% .125W F TC=0+-100	24546	C4-1/8-T0-101-F
A40A1VR1	1902-0197	1	1	DIODE-ZNR 82V 5% PD=1W IR=5UA	28480	1902-0197
A40A1XA1				NOT ASSIGNED		
A40A1XA2	1251-2035	9	1	CONNECTOR-PC EDGE 15-CONT/ROW 2-ROWS	28480	1251-2035
				A40A1 MISCELLANEOUS PARTS		
	2190-0011	8	10	WASHER-LK INTL T NO. 10 .195-IN-ID	28480	2190-0011
	2680-0099	1	10	SCREW-MACH 10-32 .375-IN-LG PAN-HD-POZI	00000	ORDER BY DESCRIPTION
A40A2	08569-60043	5	1	REGULATOR ASSEMBLY	28480	08569-60043
A40A2C1	0180-0116	1	2	CAPACITOR-FXD 6.8UF+-10% 35VDC TA	56289	150D685X9035B2
A40A2C2	0180-2141	6	1	CAPACITOR-FXD 3.3UF+-10% 50VDC TA	56289	150D335X9050B2
A40A2C3	0180-1746	5	4	CAPACITOR-FXD 15UF+-10% 20VDC TA	56289	150D156X9020B2
A40A2C4	0180-1746	5		CAPACITOR-FXD 15UF+-10% 20VDC TA	56289	150D156X9020B2
A40A2C5	0180-2182	5	1	CAPACITOR-FXD 18UF+-10% 50VDC TA	56289	150D186X9050B2
A40A2C6	0160-0168	1	1	CAPACITOR-FXD .1UF +-10% 200VDC POLYE	28480	0160-0168
A40A2C7	0180-0291	3	1	CAPACITOR-FXD 1UF+-10% 35VDC TA	56289	150D105X9035A2
A40A2C8	0160-4204	4	2	CAPACITOR-FXD .033UF +-10% 500VDC CER	51642	300-500-X7R-333K
A40A2C9	0160-3670	6	1	CAPACITOR-FXD .1UF +-20% 200VDC CER	28480	0160-3670
A40A2C10	0160-3456	6	2	CAPACITOR-FXD 1000PF +-10% 1KVDC CER	28480	0160-3456

See introduction to this section for ordering information
*Indicates factory selected value

Table 6-3. Replaceable Parts

Reference Designation	HP Part Number	C D	Qty	Description	Mfr Code	Mfr Part Number
A40A2C11	0180-0229	7	1	CAPACITOR-FXD 33UF+-10% 10VDC TA	56289	150D336X9010B2
A40A2C12	0180-1746	5		CAPACITOR-FXD 15UF+-10% 20VDC TA	56289	150D156X9020B2
A40A2C13	0180-1746	5		CAPACITOR-FXD 15UF+-10% 20VDC TA	56289	150D156X9020B2
A40A2C14	0180-0116	1		CAPACITOR-FXD 6.8UF+-10% 35VDC TA	56289	150D685X9035B2
A40A2C15	0180-1866	0	1	CAPACITOR-FXD 500UF+75-10% 75VDC AL	28480	0180-1866
A40A2C16	0160-2055	9		CAPACITOR-FXD .01UF +80-20% 100VDC CER	28480	0160-2055
A40A2C17	0160-4256	6		CAPACITOR-FXD .047UF +-20% 200VDC CER	16546	CW30 B 473M
A40A2C18	0180-0197	8		CAPACITOR-FXD 2.2UF+-10% 20VDC TA	56289	150D225X9020A2
A40A2C19	0160-2055	9		CAPACITOR-FXD .01UF +80-20% 100VDC CER	28480	0160-2055
A40A2C20	0160-3456	6		CAPACITOR-FXD 1000PF +-10% 1KVDC CER	28480	0160-3456
A40A2C21	0160-4204	4		CAPACITOR-FXD .033UF +-10% 500VDC CER	51642	300-500-X7R-333K
A40A2C22	0180-1826	2	1	CAPACITOR-FXD 100UF+50-10% 250VDC AL	56289	39D107F250HL4
A40A2CR1				NOT ASSIGNED		
A40A2CR2	1901-0050	3	16	DIODE-SWITCHING 80V 200MA 2NS DO-35	28480	1901-0050
A40A2CR3				NOT ASSIGNED		
A40A2CR4	1901-0734	0	6	DIODE-PWR RECT 1N5818 30V 1A	04713	1N5818
A40A2CR5				NOT ASSIGNED		
A40A2CR6	1901-0050	3		DIODE-SWITCHING 80V 200MA 2NS DO-35	28480	1901-0050
A40A2CR7	1901-0050	3		DIODE-SWITCHING 80V 200MA 2NS DO-35	28480	1901-0050
A40A2CR8				NOT ASSIGNED		
A40A2CR9	1901-0734	0		DIODE-PWR RECT 1N5818 30V 1A	04713	1N5818
A40A2CR10				NOT ASSIGNED		
A40A2CR11	1901-0050	3		DIODE-SWITCHING 80V 200MA 2NS DO-35	28480	1901-0050
A40A2CR12	1901-0050	3		DIODE-SWITCHING 80V 200MA 2NS DO-35	28480	1901-0050
A40A2CR13				NOT ASSIGNED		
A40A2CR14	1901-0734	0		DIODE-PWR RECT 1N5818 30V 1A	04713	1N5818
A40A2CR15				NOT ASSIGNED		
A40A2CR16	1901-0050	3		DIODE-SWITCHING 80V 200MA 2NS DO-35	28480	1901-0050
A40A2CR17	1901-0050	3		DIODE-SWITCHING 80V 200MA 2NS DO-35	28480	1901-0050
A40A2CR18				NOT ASSIGNED		
A40A2CR19	1901-0743	1	4	DIODE-PWR RECT 1N4004 400V 1A DO-41	01295	1N4004
A40A2CR20				NOT ASSIGNED		
A40A2CR21	1901-0050	3		DIODE-SWITCHING 80V 200MA 2NS DO-35	28480	1901-0050
A40A2CR22	1901-0050	3		DIODE-SWITCHING 80V 200MA 2NS DO-35	28480	1901-0050
A40A2CR23	1901-0050	3		DIODE-SWITCHING 80V 200MA 2NS DO-35	28480	1901-0050
A40A2CR24	1901-0743	1		DIODE-PWR RECT 1N4004 400V 1A DO-41	01295	1N4004
A40A2CR25	1901-0743	1		DIODE-PWR RECT 1N4004 400V 1A DO-41	01295	1N4004
A40A2CR26	1906-0094	5	2	DIODE-FW BRDG 400V 1.5A	04713	MDA-104
A40A2CR27	1901-0050	3		DIODE-SWITCHING 80V 200MA 2NS DO-35	28480	1901-0050
A40A2CR28	1901-0050	3		DIODE-SWITCHING 80V 200MA 2NS DO-35	28480	1901-0050
A40A2CR29				NOT ASSIGNED		
A40A2CR30	1901-0734	0		DIODE-PWR RECT 1N5818 30V 1A	04713	1N5818
A40A2CR31				NOT ASSIGNED		
A40A2CR32	1901-0050	3		DIODE-SWITCHING 80V 200MA 2NS DO-35	28480	1901-0050
A40A2CR33				NOT ASSIGNED		
A40A2CR34	1901-0734	0		DIODE-PWR RECT 1N5818 30V 1A	04713	1N5818
A40A2CR35				NOT ASSIGNED		
A40A2CR36	1901-0050	3		DIODE-SWITCHING 80V 200MA 2NS DO-35	28480	1901-0050
A40A2CR37				NOT ASSIGNED		
A40A2CR38	1901-0734	0		DIODE-PWR RECT 1N5818 30V 1A	04713	1N5818
A40A2CR39				NOT ASSIGNED		
A40A2CR40	1901-0050	3		DIODE-SWITCHING 80V 200MA 2NS DO-35	28480	1901-0050
A40A2CR41				NOT ASSIGNED		
A40A2CR42	1901-0743	1		DIODE-PWR RECT 1N4004 400V 1A DO-41	01295	1N4004
A40A2CR43	1901-0050	3		DIODE-SWITCHING 80V 200MA 2NS DO-35	28480	1901-0050
A40A2CR44	1906-0094	5		DIODE-FW BRDG 400V 1.5A	04713	MDA-104
A40A2DS1	1990-0718	7	8	LED-LAMP LUM-INT=1MCD IF=20MA-MAX BVR=5V	28480	HLMP-1401
A40A2DS2	1990-0718	7		LED-LAMP LUM-INT=1MCD IF=20MA-MAX BVR=5V	28480	HLMP-1401
A40A2DS3	1990-0718	7		LED-LAMP LUM-INT=1MCD IF=20MA-MAX BVR=5V	28480	HLMP-1401
A40A2DS4	1990-0718	7		LED-LAMP LUM-INT=1MCD IF=20MA-MAX BVR=5V	28480	HLMP-1401
A40A2DS5	1990-0486	6	1	LED-LAMP LUM-INT=1MCD IF=20MA-MAX BVR=5V	28480	5082-4684
A40A2DS6	1990-0718	7		LED-LAMP LUM-INT=1MCD IF=20MA-MAX BVR=5V	28480	HLMP-1401
A40A2DS7	1990-0718	7		LED-LAMP LUM-INT=1MCD IF=20MA-MAX BVR=5V	28480	HLMP-1401
A40A2DS8	1990-0718	7		LED-LAMP LUM-INT=1MCD IF=20MA-MAX BVR=5V	28480	HLMP-1401
A40A2DS9	1990-0718	7		LED-LAMP LUM-INT=1MCD IF=20MA-MAX BVR=5V	28480	HLMP-1401
A40A2F1	2110-0003	0	1	FUSE 3A 250V NTD 1.25X.25 UL	75915	312003
A40A2F2	2110-0001	8	1	FUSE 1A 250V NTD 1.25X.25 UL	75915	312001
A40A2F3	2110-0043	8	3	FUSE 1.5A 250V NTD 1.25X.25 UL	28480	2110-0043
A40A2F4	2110-0043	8		FUSE 1.5A 250V NTD 1.25X.25 UL	28480	2110-0043
A40A2F5	2110-0043	8		FUSE 1.5A 250V NTD 1.25X.25 UL	28480	2110-0043
A40A2F6	2110-0004	1	2	FUSE .25A 250V NTD 1.25X.25 UL	28480	2110-0004
A40A2F7	2110-0004	1		FUSE .25A 250V NTD 1.25X.25 UL	28480	2110-0004
A40A2J1	1251-4187	6	1	CONNECTOR 9-PIN M POST TYPE	28480	1251-4187
A40A2J2	1251-4740	7	1	CONNECTOR 14-PIN M POST TYPE	28480	1251-4740

See introduction to this section for ordering information
*Indicates factory selected value

Table 6-3. Replaceable Parts

Reference Designation	HP Part Number	C D	Qty	Description	Mfr Code	Mfr Part Number
A40A2MP1	08565-00030	0	1	HEAT SINK-TRANSISTOR	28480	08565-00030
A40A2Q1	1854-0611	1	3	TRANSISTOR NPN 2N6055 SI DARL TO-3	04713	2N6055
A40A2Q2	1854-0774	7	1	TRANSISTOR NPN 2N6056 SI DARL TO-3	3L585	2N6056
A40A2Q3	1854-0611	1		TRANSISTOR NPN 2N6055 SI DARL TO-3	04713	2N6055
A40A2Q4	1854-0611	1		TRANSISTOR NPN 2N6055 SI DARL TO-3	04713	2N6055
A40A2Q5	1854-0072	8	2	TRANSISTOR NPN 2N3054 SI TO-66 PD=25W	3L585	2N3054
A40A2Q6	1853-0052	2	1	TRANSISTOR PNP 2N3740 SI TO-66 PD=25W	04713	2N3740
A40A2Q7	1854-0072	8		TRANSISTOR NPN 2N3054 SI TO-66 PD=25W	3L585	2N3054
A40A2Q8	1854-0311	8	2	TRANSISTOR NPN 2N4240 SI TO-66 PD=35W	3L585	2N4240
A40A2Q9	1854-0311	8		TRANSISTOR NPN 2N4240 SI TO-66 PD=35W	3L585	2N4240
A40A2Q10	1884-0261	0		THYRISTOR-SCR TO-220AB VRRM=100	28480	1884-0261
A40A2Q11	1854-0404	0	7	TRANSISTOR NPN SI TO-18 PD=360MW	28480	1854-0404
A40A2Q12	1855-0081	1	2	TRANSISTOR J-FET N-CHAN D-MODE SI	28480	1855-0081
A40A2Q13	1884-0261	0		THYRISTOR-SCR TO-220AB VRRM=100	28480	1884-0261
A40A2Q14	1854-0404	0		TRANSISTOR NPN SI TO-18 PD=360MW	28480	1854-0404
A40A2Q15	1884-0261	0		THYRISTOR-SCR TO-220AB VRRM=100	28480	1884-0261
A40A2Q16	1854-0404	0		TRANSISTOR NPN SI TO-18 PD=360MW	28480	1854-0404
A40A2Q17	1884-0261	0		THYRISTOR-SCR TO-220AB VRRM=100	28480	1884-0261
A40A2Q18	1854-0404	0		TRANSISTOR NPN SI TO-18 PD=360MW	28480	1854-0404
A40A2Q19	1884-0261	0		THYRISTOR-SCR TO-220AB VRRM=100	28480	1884-0261
A40A2Q20	1854-0404	0		TRANSISTOR NPN SI TO-18 PD=360MW	28480	1854-0404
A40A2Q21	1884-0261	0		THYRISTOR-SCR TO-220AB VRRM=100	28480	1884-0261
A40A2Q22	1853-0007	7	1	TRANSISTOR PNP 2N3251 SI TO-18 PD=360MW	04713	2N3251
A40A2Q23	1884-0261	0		THYRISTOR-SCR TO-220AB VRRM=100	28480	1884-0261
A40A2Q24	1854-0404	0		TRANSISTOR NPN SI TO-18 PD=360MW	28480	1854-0404
A40A2Q25	1884-0261	0		THYRISTOR-SCR TO-220AB VRRM=100	28480	1884-0261
A40A2Q26	1854-0404	0		TRANSISTOR NPN SI TO-18 PD=360MW	28480	1854-0404
A40A2Q27	1855-0081	1		TRANSISTOR J-FET N-CHAN D-MODE SI	28480	1855-0081
A40A2Q28	1854-0079	5	2	TRANSISTOR NPN 2N3439 SI TO-5 PD=1W	3L585	2N3439
A40A2Q29	1854-0079	5		TRANSISTOR NPN 2N3439 SI TO-5 PD=1W	3L585	2N3439
A40A2Q30	1884-0279	0	1	THYRISTOR-SCR TO-220AB VRRM=600	3L585	S2060M
A40A2Q31	1853-0221	7	1	TRANSISTOR PNP 2N5416 SI TO-5 PD=1W	3L585	2N5416
A40A2R1- A40A2R6				NOT ASSIGNED		
A40A2R7	0698-3236	9	7	RESISTOR 15K .25% .125W F TC=0+-50	28480	0698-3236
A40A2R8	0698-3237	0	2	RESISTOR 5K .25% .125W F TC=0+-50	28480	0698-3237
A40A2R9	0811-1673	6	1	RESISTOR 3.9 5% 2W PW TC=0+-400	75042	BWH2-3R9-J
A40A2R10	0757-0317	7	2	RESISTOR 1.33K 1% .125W F TC=0+-100	24546	C4-1/8-T0-1331-F
A40A2R11	0698-3157	3	1	RESISTOR 19.6K 1% .125W F TC=0+-100	24546	C4-1/8-T0-1962-F
A40A2R12	0698-3153	9	1	RESISTOR 3.83K 1% .125W F TC=0+-100	24546	C4-1/8-T0-3831-F
A40A2R13	0757-0401	0		RESISTOR 100 1% .125W F TC=0+-100	24546	C4-1/8-T0-101-F
A40A2R14	0757-0274	5	3	RESISTOR 1.21K 1% .125W F TC=0+-100	24546	C4-1/8-T0-1211-F
A40A2R15	0698-0084	9	1	RESISTOR 2.15K 1% .125W F TC=0+-100	24546	C4-1/8-T0-2151-F
A40A2R16	0757-0443	0	1	RESISTOR 11K 1% .125W F TC=0+-100	24546	C4-1/8-T0-1102-F
A40A2R17	2100-1774	3	1	RESISTOR-TRMR 2K 5% WW TOP-ADJ 1-TRN	28480	2100-1774
A40A2R18	0757-0440	7	2	RESISTOR 7.5K 1% .125W F TC=0+-100	24546	C4-1/8-T0-7501-F
A40A2R19	0811-1661	2	2	RESISTOR .39 5% 2W PW TC=0+-800	75042	BWH2-39/100-J
A40A2R20	0757-0418	9	2	RESISTOR 619 1% .125W F TC=0+-100	24546	C4-1/8-T0-619R-F
A40A2R21	0757-0442	9	7	RESISTOR 10K 1% .125W F TC=0+-100	24546	C4-1/8-T0-1002-F
A40A2R22	0698-3151	7	2	RESISTOR 2.87K 1% .125W F TC=0+-100	24546	C4-1/8-T0-2871-F
A40A2R23	0757-0401	0		RESISTOR 100 1% .125W F TC=0+-100	24546	C4-1/8-T0-101-F
A40A2R24	0698-3236	9		RESISTOR 15K .25% .125W F TC=0+-50	28480	0698-3236
A40A2R25	0698-3236	9		RESISTOR 15K .25% .125W F TC=0+-50	28480	0698-3236
A40A2R26	0811-1661	2		RESISTOR .39 5% 2W PW TC=0+-800	75042	BWH2-39/100-J
A40A2R27	0757-0418	9		RESISTOR 619 1% .125W F TC=0+-100	24546	C4-1/8-T0-619R-F
A40A2R28	0757-0442	9		RESISTOR 10K 1% .125W F TC=0+-100	24546	C4-1/8-T0-1002-F
A40A2R29	0698-3151	7		RESISTOR 2.87K 1% .125W F TC=0+-100	24546	C4-1/8-T0-2871-F
A40A2R30	0757-0401	0		RESISTOR 100 1% .125W F TC=0+-100	24546	C4-1/8-T0-101-F
A40A2R31	0698-3236	9		RESISTOR 15K .25% .125W F TC=0+-50	28480	0698-3236
A40A2R32	0698-7421	2	1	RESISTOR 40K .25% .125W F TC=0+-100	19701	MF4C1/8-T0-4002-C
A40A2R33	0757-0438	3	1	RESISTOR 5.11K 1% .125W F TC=0+-100	24546	C4-1/8-T0-5111-F
A40A2R34	0698-3159	5	1	RESISTOR 26.1K 1% .125W F TC=0+-100	24546	C4-1/8-T0-2612-F
A40A2R35	0811-1666	7	1	RESISTOR 1 5% 2W PW TC=0+-800	75042	BWH2-1R0-J
A40A2R36	0757-0428	1	1	RESISTOR 1.62K 1% .125W F TC=0+-100	24546	C4-1/8-T0-1621-F
A40A2R37	0757-0458	7	1	RESISTOR 51.1K 1% .125W F TC=0+-100	24546	C4-1/8-T0-5112-F
A40A2R38	0757-0440	7		RESISTOR 7.5K 1% .125W F TC=0+-100	24546	C4-1/8-T0-7501-F
A40A2R39	0698-3444	1	2	RESISTOR 316 1% .125W F TC=0+-100	24546	C4-1/8-T0-316R-F
A40A2R40	0757-0367	7	1	RESISTOR 100K 1% .5W F TC=0+-100	28480	0757-0367
A40A2R41	0757-0403	2	1	RESISTOR 121 1% .125W F TC=0+-100	24546	C4-1/8-T0-121R-F
A40A2R42	0698-3452	1	2	RESISTOR 147K 1% .125W F TC=0+-100	24546	C4-1/8-T0-1473-F
A40A2R43	0698-3440	7	1	RESISTOR 196 1% .125W F TC=0+-100	24546	C4-1/8-T0-196R-F
A40A2R44	0757-0442	9		RESISTOR 10K 1% .125W F TC=0+-100	24546	C4-1/8-T0-1002-F
A40A2R45	0757-0317	7		RESISTOR 1.33K 1% .125W F TC=0+-100	24546	C4-1/8-T0-1331-F
A40A2R46	0698-7796	4	1	RESISTOR 14.7K .25% .125W F TC=0+-100	19701	MF4C1/8-T0-1472-C
A40A2R47	0811-2823	0	2	RESISTOR 7.5 5% .75W PW TC=0+-50	91637	RS1/2-T2-7R5-J
A40A2R48	0757-0274	5		RESISTOR 1.21K 1% .125W F TC=0+-100	24546	C4-1/8-T0-1211-F
A40A2R49	0698-4519	3	1	RESISTOR 140K 1% .125W F TC=0+-100	24546	C4-1/8-T0-1403-F

See introduction to this section for ordering information
*Indicates factory selected value

Table 6-3. Replaceable Parts

Reference Designation	HP Part Number	C D	Qty	Description	Mfr Code	Mfr Part Number
A40A2R50	0757-0465	6	1	RESISTOR 100K 1% .125W F TC=0+-100	24546	C4-1/8-T0-1003-F
A40A2R51	0757-0853	6	1	RESISTOR 51.1K 1% .5W F TC=0+-100	28480	0757-0853
A40A2R52	0757-0401	0		RESISTOR 100 1% .125W F TC=0+-100	24546	C4-1/8-T0-101-F
A40A2R53				NOT ASSIGNED		
A40A2R54	0698-7794	2	3	RESISTOR 10K .25% .125W F TC=0+-100	19701	MF4C1/8-T0-1002-C
A40A2R55	0698-8417	8	1	RESISTOR 5.3K .25% .125W F TC=0+-50	19701	MF4C1/8-T2-5301-C
A40A2R56	0811-3290	7	1	RESISTOR .1 5% 2W PW TC=0+-800	28480	0811-3290
A40A2R57	0698-0083	8	1	RESISTOR 1.96K 1% .125W F TC=0+-100	24546	C4-1/8-T0-1961-F
A40A2R58	0757-0442	9		RESISTOR 10K 1% .125W F TC=0+-100	24546	C4-1/8-T0-1002-F
A40A2R59	0757-0422	5	1	RESISTOR 909 1% .125W F TC=0+-100	24546	C4-1/8-T0-909R-F
A40A2R60	0757-0401	0		RESISTOR 100 1% .125W F TC=0+-100	24546	C4-1/8-T0-101-F
A40A2R61	0698-3237	0		RESISTOR 5K .25% .125W F TC=0+-50	28480	0698-3237
A40A2R62	0698-7794	2		RESISTOR 10K .25% .125W F TC=0+-100	19701	MF4C1/8-T0-1002-C
A40A2R63	0811-2823	0		RESISTOR 7.5 5% .75W PW TC=0+-50	91637	RS1/2-T2-7R5-J
A40A2R64	0757-0278	9	3	RESISTOR 1.78K 1% .125W F TC=0+-100	24546	C4-1/8-T0-1781-F
A40A2R65	0757-0442	9		RESISTOR 10K 1% .125W F TC=0+-100	24546	C4-1/8-T0-1002-F
A40A2R66	0757-0278	9		RESISTOR 1.78K 1% .125W F TC=0+-100	24546	C4-1/8-T0-1781-F
A40A2R67	0757-0401	0		RESISTOR 100 1% .125W F TC=0+-100	24546	C4-1/8-T0-101-F
A40A2R68	0698-3236	9		RESISTOR 15K .25% .125W F TC=0+-50	28480	0698-3236
A40A2R69	0698-7794	2		RESISTOR 10K .25% .125W F TC=0+-100	19701	MF4C1/8-T0-1002-C
A40A2R70	0811-1671	4	1	RESISTOR 2.7 5% 2W PW TC=0+-400	75042	BWH2-2R7-J
A40A2R71	0757-0274	5		RESISTOR 1.21K 1% .125W F TC=0+-100	24546	C4-1/8-T0-1211-F
A40A2R72	0757-0442	9		RESISTOR 10K 1% .125W F TC=0+-100	24546	C4-1/8-T0-1002-F
A40A2R73	0757-0278	9		RESISTOR 1.78K 1% .125W F TC=0+-100	24546	C4-1/8-T0-1781-F
A40A2R74	0757-0401	0		RESISTOR 100 1% .125W F TC=0+-100	24546	C4-1/8-T0-101-F
A40A2R75	0698-3236	9		RESISTOR 15K .25% .125W F TC=0+-50	28480	0698-3236
A40A2R76	0698-3236	9		RESISTOR 15K .25% .125W F TC=0+-50	28480	0698-3236
A40A2R77	0811-1675	8	1	RESISTOR 5.6 5% 2W PW TC=0+-400	75042	BWH2-5R6-J
A40A2R78	0757-1094	9	1	RESISTOR 1.47K 1% .125W F TC=0+-100	24546	C4-1/8-T0-1471-F
A40A2R79	0698-3160	8	1	RESISTOR 31.6K 1% .125W F TC=0+-100	24546	C4-1/8-T0-3162-F
A40A2R80	0698-3156	2	1	RESISTOR 14.7K 1% .125W F TC=0+-100	24546	C4-1/8-T0-1472-F
A40A2R81	0757-0200	7	1	RESISTOR 5.62K 1% .125W F TC=0+-100	24546	C4-1/8-T0-5621-F
A40A2R82	0698-3444	1		RESISTOR 316 1% .125W F TC=0+-100	24546	C4-1/8-T0-316R-F
A40A2R83	0698-3452	1		RESISTOR 147K 1% .125W F TC=0+-100	24546	C4-1/8-T0-1473-F
A40A2R84	0757-0442	9		RESISTOR 10K 1% .125W F TC=0+-100	24546	C4-1/8-T0-1002-F
A40A2R85	0757-0421	4	1	RESISTOR 825 1% .125W F TC=0+-100	24546	C4-1/8-T0-825R-F
A40A2R86	0757-0346	2	1	RESISTOR 10 1% .125W F TC=0+-100	24546	C4-1/8-T0-10R0-F
A40A2TP1- A40A2TP11	1251-0600	0	11	CONNECTOR-SGL CONT PIN 1.14-MM-BSC-SZ SQ	28480	1251-0600
A40A2U1- A40A2U10	1826-0261	8	10	IC OP AMP LOW-NOISE TO-99 PKG	28480	1826-0261
A40A2VR1	1902-3256	9	1	DIODE-ZNR 23.7V 5% DO-35 PD=.4W	28480	1902-3256
A40A2VR2	1902-3171	7	1	DIODE-ZNR 11V 5% DO-35 PD=.4W TC=+.062%	28480	1902-3171
A40A2VR3	1902-0680	7	1	DIODE-ZNR 1N827 6.2V 5% DO-7 PD=.4W	24046	1N827
A40A2VR4	1902-3224	1	2	DIODE-ZNR 17.8V 5% DO-35 PD=.4W	28480	1902-3224
A40A2VR5	1902-3224	1		DIODE-ZNR 17.8V 5% DO-35 PD=.4W	28480	1902-3224
A40A2VR6	1902-0244	9	2	DIODE-ZNR 30V 5% PD=1W IR=5UA	28480	1902-0244
A40A2VR7	1902-0025	4	2	DIODE-ZNR 10V 5% DO-35 PD=.4W TC=+.06%	28480	1902-0025
A40A2VR8	1902-3333	3	1	DIODE-ZNR 46.4V 5% DO-35 PD=.4W	28480	1902-3333
A40A2VR9	1902-3382	2	1	DIODE-ZNR 68.1V 2% DO-7 PD=.4W TC=+.079%	28480	1902-3382
A40A2VR10	1902-0683	0	1	DIODE-ZNR 100V 2% DO-15 PD=1W TC=+.083%	28480	1902-0683
A40A2VR11	1902-0049	2	1	DIODE-ZNR 6.19V 5% DO-35 PD=.4W	28480	1902-0049
A40A2VR12	1902-3182	0	2	DIODE-ZNR 12.1V 5% DO-35 PD=.4W	28480	1902-3182
A40A2VR13	1902-3182	0		DIODE-ZNR 12.1V 5% DO-35 PD=.4W	28480	1902-3182
A40A2VR14	1902-0244	9		DIODE-ZNR 30V 5% PD=1W IR=5UA	28480	1902-0244
A40A2VR15	1902-0025	4		DIODE-ZNR 10V 5% DO-35 PD=.4W TC=+.06%	28480	1902-0025
A40A2VR16	1902-3301	5	1	DIODE-ZNR 34.8V 5% DO-35 PD=.4W	28480	1902-3301
A40A2VR17	1902-3070	5	1	DIODE-ZNR 4.22V 5% DO-35 PD=.4W	28480	1902-3070
				A40A2 MISCELLANEOUS PARTS		
	4330-0145	9		INSULATOR-BEAD GLASS	28480	4330-0145
	6040-0239	9		THERMAL COMPOUND	05820	120
	2200-0145	2	18	SCREW-MACH 4-40 .438-IN-LG PAN-HD-POZI	00000	ORDER BY DESCRIPTION
	2190-0004	9	18	WASHER-LK INTL T NO. 4 .115-IN-ID	28480	2190-0004
	2110-0269	8	14	FUSEHOLDER-CLIP TYPE.25D-FUSE	28480	2110-0269
	1251-3172	7	10	CONNECTOR-SGL CONT SKT .03-IN-BSC-SZ RND	28480	1251-3172
	1200-0043	8	4	INSULATOR-XSTR ALUMINUM	28480	1200-0043
	1400-0493	6	2	CABLE TIE .062-1.25-DIA .14-WD NYL	06383	PLT1.5-MP8
	0340-0416	4	5	INSULATOR-XSTR THERMA-FILM	28480	0340-0416
	0380-0059	5	3	SPACER-RVT-ON .25-IN-LG .152-IN-ID	00000	ORDER BY DESCRIPTION
	0380-0863	9	18	STANDOFF-RVT-ON .125-IN-LG 4-40THD	28480	0380-0863
	0340-0433	5	1	INSULATOR-FLG-BSHG NYLON	28480	0340-0433

See introduction to this section for ordering information
*Indicates factory selected value

Table 6-3. Replaceable Parts

Reference Designation	HP Part Number	C D	Qty	Description	Mfr Code	Mfr Part Number
A41	08569-60087	7	1	LINE MODULE AND CABLE ASSEMBLY	28480	08569-60087
A41C1	0160-4065	5	1	CAPACITOR-FXD .1UF +-20% 250VAC(RMS)	28480	0160-4065
A41C2	0160-2636	2	2	CAPACITOR-FXD 470PF +-20% 3KVDC CER	28480	0160-2636
A41C3	0160-2636	2		CAPACITOR-FXD 470PF +-20% 3KVDC CER	28480	0160-2636
A41F1	2110-0003	0	1	FUSE 3A 250V NTD 1.25X.25 UL	75915	312003
A41FL1	0960-0448	6	1	LINE MODULE-FILTERED	05245	F1927
A41S1	3101-0449	0	1	SWITCH-RKR SUBMIN DPDT 3A 250VAC	28480	3101-0449
A41S2	3103-0102	6	1	SWITCH-THERMAL (LOCATED ON A40A2)	28480	3103-0102
				A41 MISCELLANEOUS PARTS		
	0890-0096	1	1	TUBING-FLEX .04-ID TFE .016-WALL	28480	0890-0096
	0890-0291	8	1	TUBING-HS .375-D/.187-RCVD .025-WALL	28480	0890-0291
	0890-0301	1	1	TUBING-HS .75-D/.375-RCVD .03-WALL POLYO	28480	0890-0301
	0890-0402	3	1	SLIDER-HS PVF	28480	0890-0402
	8120-0579	2	1	CABLE-SHLD 22AWG 5-CNDCT JGK-JKT	28480	8120-0579
	8150-0447	6	1	WIRE 24AWG BK 300V PVC 7X32 80C	28480	8150-0447
	4040-1770	3	1	CAP SWITCH (LOCATED ON A40A2)	28480	4040-1770

See introduction to this section for ordering information
*Indicates factory selected value

Table 6-3. Replaceable Parts

Reference Designation	HP Part Number	C D	Qty	Description	Mfr Code	Mfr Part Number
A42	08569-60024	2	1	COMB GENERATOR ASSEMBLY (OPTION 001)	28480	08569-60024
A42C1	0160-2437	1	2	CAPACITOR-FDTHRU 5000PF +80 -20% 200V	28480	0160-2437
A42C2	0160-2437	1		CAPACITOR-FDTHRU 5000PF +80 -20% 200V	28480	0160-2437
A42C3	0180-0094	4	1	CAPACITOR-FXD 100UF+75-10% 25VDC AL	56289	30D107G025DD2
A42J1	1250-1157	2	1	CONNECTOR-RF SMA FEM THD-HOLE 50-OHM	28480	1250-1157
A42MP1	08569-20024	8	1	HOUSING-COMB GENERATOR	28480	08569-20024
A42MP2	08569-00023	5	1	COVER-COMB GENERATOR	28480	08569-00023
				A42 MISCELLANEOUS PARTS		
	0360-0268	6	1	TERMINAL-SLDR LUG LK-MTG FOR-#6-SCR	28480	0360-0268
	0470-0013	2		SEALANT LOCKTITE 88 GRADE A POLYE IP	28480	0470-0013
	2200-0105	4	16	SCREW-MACH 4-40 .312-IN-LG PAN-HD-POZI	00000	ORDER BY DESCRIPTION
	2360-0331	6	1	SCREW-MACH 6-32 .25-IN-LG PAN-HD-POZI	28480	2360-0331
A42A1	08569-60026	4	1	COMB GENERATOR BOARD (OPTION 001)	28480	08569-60026
A42A1C1	0160-0127	2	4	CAPACITOR-FXD 1UF +-20% 25VDC CER	28480	0160-0127
A42A1C2	0160-0127	2		CAPACITOR-FXD 1UF +-20% 25VDC CER	28480	0160-0127
A42A1C3	0121-0451	3	2	CAPACITOR-V TRMR-AIR 1.7-11PF 175V	74970	187-0106-028
A42A1C4	0160-4793	6	1	CAPACITOR-FXD 6.8PF +-.5PF 100VDC CER	28480	0160-4793
A42A1C5	0121-0451	3		CAPACITOR-V TRMR-AIR 1.7-11PF 175V	74970	187-0106-028
A42A1C6	0160-4814	2	1	CAPACITOR-FXD 150PF +-5% 100VDC CER	28480	0160-4814
A42A1C7	0160-4802	8	1	CAPACITOR-FXD 82PF +-5% 100VDC CER 0+-30	28480	0160-4802
A42A1C8	0160-4786	7	1	CAPACITOR-FXD 27PF +-5% 100VDC CER 0+-30	28480	0160-4786
A42A1C10	0160-4790	3	1	CAPACITOR-FXD 12PF +-5% 100VDC CER 0+-30	28480	0160-4790
A42A1C11	0160-4574	1	1	CAPACITOR-FXD 1000PF +-10% 100VDC CER	28480	0160-4574
A42A1C12	0160-4521	8	1	CAPACITOR-FXD 12PF +-5% 200VDC CER 0+-30	28480	0160-4521
A42A1C13	0160-0127	2		CAPACITOR-FXD 1UF +-20% 25VDC CER	28480	0160-0127
A42A1C14	0180-1746	5	1	CAPACITOR-FXD 15UF+-10% 20VDC TA	56289	150D156X9020B2
A42A1C15	0121-0046	2	1	CAPACITOR-V TRMR-CER 9-35PF 200V PC-MTG	52763	304322 9/35PF N650
A42A1C17	0160-0127	2		CAPACITOR-FXD 1UF +-20% 25VDC CER	28480	0160-0127
A42A1CR1	1901-0050	3	1	DIODE-SWITCHING 80V 200MA 2NS DO-35	28480	1901-0050
A42A1CR2	1901-0539	3	4	DIODE-SM SIG SCHOTTKY	28480	1901-0539
A42A1CR3	1901-0539	3		DIODE-SM SIG SCHOTTKY	28480	1901-0539
A42A1CR4	1901-0539	3		DIODE-SM SIG SCHOTTKY	28480	1901-0539
A42A1CR5	1901-0539	3		DIODE-SM SIG SCHOTTKY	28480	1901-0539
A42A1E1	9170-0016	8	1	CORE-SHIELDING BEAD	28480	9170-0016
A42A1L1	9100-2249	6	2	INDUCTOR RF-CH-MLD 150NH 10% .105DX.26LG	28480	9100-2249
A42A1L2	9140-0141	7	1	INDUCTOR RF-CH-MLD 680NH 10% .105DX.26LG	28480	9140-0141
A42A1L3*	9100-2255	4	1	INDUCTOR RF-CH-MLD 470NH 10% .105DX.26LG	28480	9100-2255
A42A1L4	9100-2249	6		INDUCTOR RF-CH-MLD 150NH 10% .105DX.26LG	28480	9100-2249
A42A1L5	9100-2891	4	1	INDUCTOR RF-CH-MLD 50NH 10% .105DX.26LG	28480	9100-2891
A42A1L6	9100-2247	4	1	INDUCTOR RF-CH-MLD 100NH 10% .105DX.26LG	28480	9100-2247
A42A1MP1	1200-0173	5	3	INSULATOR-XSTR DAP-GL	28480	1200-0173
A42A1MP2	1250-0095	5	1	CONNECTOR-RF N M 4-HOLE-FLG-FR	28480	1250-0095
A42A1Q1	1854-0247	9	2	TRANSISTOR NPN SI TO-39 PD=1W FT=800MHZ	28480	1854-0247
A42A1Q2	1854-0247	9		TRANSISTOR NPN SI TO-39 PD=1W FT=800MHZ	28480	1854-0247
A42A1Q3	1854-0784	9	1	TRANSISTOR NPN 2N3866A SI TO-39 PD=5W	04713	2N3866A
A42A1R1	0757-0279	0	1	RESISTOR 3.16K 1% .125W F TC=0+-100	24546	C4-1/8-TO-3161-F
A42A1R2	0698-7229	8	1	RESISTOR 511 1% .05W F TC=0+-100	24546	C3-1/8-TO-511R-F
A42A1R3	0698-7205	0	1	RESISTOR 51.1 1% .05W F TC=0+-100	24546	C3-1/8-TO-51R1-F
A42A1R4	0698-7219	6	1	RESISTOR 196 1% .05W F TC=0+-100	24546	C3-1/8-TO-196R-F
A42A1R5	0698-7188	8	4	RESISTOR 10 1% .05W F TC=0+-100	24546	C3-1/8-TO-10R-F
A42A1R6*	0698-7196	8	1	RESISTOR 21.5 1% .05W F TC=0+-100	24546	C3-1/8-TO-21R5-F
A42A1R7	0757-0274	5	1	RESISTOR 1.21K 1% .125W F TC=0+-100	24546	C4-1/8-TO-1211-F
A42A1R8	0698-7222	1	1	RESISTOR 261 1% .05W F TC=0+-100	24546	C3-1/8-TO-261R-F
A42A1R9	0698-7188	8		RESISTOR 10 1% .05W F TC=0+-100	24546	C3-1/8-TO-10R-F
A42A1R10	0698-7208	3	1	RESISTOR 68.1 1% .05W F TC=0+-100	24546	C3-1/8-TO-68R1-F
A42A1R11	0698-7188	8		RESISTOR 10 1% .05W F TC=0+-100	24546	C3-1/8-TO-10R-F
A42A1R12	0698-7188	8		RESISTOR 10 1% .05W F TC=0+-100	24546	C3-1/8-TO-10R-F
A42A1R13	0698-3429	2	2	RESISTOR 19.6 1% .125W F TC=0+-100	03888	PME55-1/8-TO-19R6-F
A42A1R14	0698-3429	2		RESISTOR 19.6 1% .125W F TC=0+-100	03888	PME55-1/8-TO-19R6-F
A42A1R15	0698-7281	2	1	RESISTOR 75K 2% .05W F TC=0+-100	24546	C3-1/8-TO-7502-G
A42A1Y1	0410-1024	1	1	CRYSTAL-QUARTZ 100.000 MHZ	28480	0410-1024

See introduction to this section for ordering information
*Indicates factory selected value

Table 6-3. Replaceable Parts

Reference Designation	HP Part Number	C D	Qty	Description	Mfr Code	Mfr Part Number
A43	08569-60069	5	1	HP-IB CONNECTOR ASSEMBLY	28480	08569-60069
A43C1	0160-4835	7	5	CAPACITOR-FXD .1UF +-10% 50VDC CER	28480	0160-4835
A43C2	0160-4835	7		CAPACITOR-FXD .1UF +-10% 50VDC CER	28480	0160-4835
A43C3	0160-4835	7		CAPACITOR-FXD .1UF +-10% 50VDC CER	28480	0160-4835
A43C4	0160-4835	7		CAPACITOR-FXD .1UF +-10% 50VDC CER	28480	0160-4835
A43C5	0160-4835	7		CAPACITOR-FXD .1UF +-10% 50VDC CER	28480	0160-4835
A43J1	1251-4040	0	1	CONNECTOR 24-PIN F MICRO RIBBON	28480	1251-4040
A43R1	0698-7229	8	5	RESISTOR 511 1% .05W F TC=0+-100	24546	C3-1/8-TO-511R-F
A43R2	0698-7229	8		RESISTOR 511 1% .05W F TC=0+-100	24546	C3-1/8-TO-511R-F
A43R3	0698-7229	8		RESISTOR 511 1% .05W F TC=0+-100	24546	C3-1/8-TO-511R-F
A43R4	0698-7229	8		RESISTOR 511 1% .05W F TC=0+-100	24546	C3-1/8-TO-511R-F
A43R5	0698-7229	8		RESISTOR 511 1% .05W F TC=0+-100	24546	C3-1/8-TO-511R-F
A43S1	3101-2196	8	1	SWITCH-SL 5-SPDT DIP-SLIDE-ASSY .1A	28480	3101-2196
A43W1	08569-60021	9	1	CABLE ASSEMBLY-HP-IB	28480	08569-60021
				A43 MISCELLANEOUS PARTS		
	08569-20020	4	2	HP-IB SPACER	28480	08569-20020

See introduction to this section for ordering information
*Indicates factory selected value

Table 6-3. Replaceable Parts

Reference Designation	HP Part Number	C D	Qty	Description	Mfr Code	Mfr Part Number
				CHASSIS PARTS - ELECTRICAL		
AT1				NOT ASSIGNED		
AT2	0960-0472	6	1	ISOLATOR-FREQ RANGE=2.05 TO 4.45GHZ	28480	0960-0472
AT3	08565-60090	8	3	ATTENUATOR-3 DB COAX	28480	08565-60090
AT4	08565-60090	8		ATTENUATOR-3 DB COAX	28480	08565-60090
AT5				NOT ASSIGNED		
AT6	1810-0118	1	1	TERMINATION:COAX SMA 50 OHM 1W	28480	1810-0118
AT7	0955-0114	2	1	ATTENUATOR-COAXIAL ATTENUATION:3DB+/-.3	28480	0955-0114
AT8				NOT ASSIGNED		
B1	3160-0252	7	1	FAN-TBAX 95-CFM 128V 50/60-HZ 2KV-DIEL	28480	3160-0252
C1	0160-4082	6	4	CAPACITOR-FDTHRU 1000PF 20% 200V CER	28480	0160-4082
C2	0160-4082	6		CAPACITOR-FDTHRU 1000PF 20% 200V CER	28480	0160-4082
C3	0160-4082	6		CAPACITOR-FDTHRU 1000PF 20% 200V CER	28480	0160-4082
C4	0160-4082	6		CAPACITOR-FDTHRU 1000PF 20% 200V CER	28480	0160-4082
E1	9170-0029	3	4	CORE-SHIELDING BEAD	28480	9170-0029
E2	9170-0029	3		CORE-SHIELDING BEAD	28480	9170-0029
E3	9170-0029	3		CORE-SHIELDING BEAD	28480	9170-0029
E4	9170-0029	3		CORE-SHIELDING BEAD	28480	9170-0029
F1	2110-0043	8	1	FUSE 1.5A 250V NTD 1.25X.25 UL	28480	2110-0043
FL1				SEE A41FL1		
FL2	9135-0131	4	1	FILTER-LOW PASS 2.06 SMA	28480	9135-0131
FL3	0960-0159	6	1	FILTER-TUB BANDPASS DC-1800 MHZ	28480	0960-0159
FL4	9135-0048	2	1	FILTER-LOW PASS SMA-TERMS	28480	9135-0048
J1	86290-60079	5	1	CONNECTOR-TYPE N, INPUT (SEE FIGURE 6-1)	28480	86290-60079
J2	1251-1286	0	1	CONNECTOR-17-PIN FD SERIES (AUX B)	28480	1251-1286
J3	1250-0083	1	6	CONNECTOR-RF BNC FEM SGL-HOLE-FR 50-OHM (HORIZONTAL SWEEP)	28480	1250-0083
J4	1250-0083	1		CONNECTOR-RF BNC FEM SGL-HOLE-FR 50-OHM (VERTICAL)	28480	1250-0083
J5	1250-0083	1		CONNECTOR-RF BNC FEM SGL-HOLE-FR 50-OHM (BLANK)	28480	1250-0083
J6	1250-0083	1		CONNECTOR-RF BNC FEM SGL-HOLE-FR 50-OHM (EXT SWEEP)	28480	1250-0083
J7				P/O W25 (EXT TRIGGER)		
J8	1250-0083	1		CONNECTOR-RF BNC FEM SGL-HOLE-FR 50-OHM (BLANKING)	28480	1250-0083
J9	1250-1753	4	2	1ST LO OUTPUT	28480	1250-1753
J10				P/O W24 (21.4 MHZ IF OUTPUT)		
J11	1250-0083	1		CONNECTOR-RF BNC FEM SGL-HOLE-FR 50-OHM (RETRACE)	28480	1250-0083
J12	1250-1753	4		IF INPUT 321.4MHZ	28480	1250-1753
K1	3106-0022	5	3	SWITCH-COAX SPDT;FAIL-SAFE OPN;50	28480	3106-0022
K2	3106-0022	5		SWITCH-COAX SPDT;FAIL-SAFE OPN;50	28480	3106-0022
K3	3106-0021	4	3	SWITCH-COAX SPDT;28VDC COIL;35M-27	9D949	315-10053-13
K4	3106-0021	4		SWITCH-COAX SPDT;28VDC COIL;35M-27	9D949	315-10053-13
K5	3106-0021	4		SWITCH-COAX SPDT;28VDC COIL;35M-27	9D949	315-10053-13
T1	08569-60027	5	1	POWER TRANSFORMER ASSEMBLY	28480	08569-60027
U1	0960-0635	3	1	MULTIPLIER, H.V.	28480	0960-0635
V1	5083-6176	4	1	CRT TUBE	28480	5083-6176
W1	08565-20070	0	1	CABLE ASSY-INPUT	28480	08565-20070
W2	08565-20182	5	1	CABLE ASSY-RF ATTENUATOR	28480	08565-20182
W3	08565-20183	6	1	CABLE ASSY-YTF INPUT	28480	08565-20183
W4	08565-20073	3	1	CABLE ASSY-YTF OUTPUT	28480	08565-20073
W5	08569-20032	8	1	CABLE ASSY-1ST MIXER INPUT	28480	08569-20032
W6	08565-20184	7	1	CABLE ASSY-1.8 GHZ LPF INPUT	28480	08565-20184
W7	08565-20120	1	1	CABLE ASSY-1.8 GHZ LPF OUTPUT	28480	08565-20120
W8	08569-20060	2	1	CABLE ASSY-YTO TO MIXER	28480	08569-20060
W9	08569-20030	6	1	CABLE ASSY-FIRST MIXER, LO OUTPUT	28480	08569-20030
W10	08565-20079	9	1	CABLE ASSY-TUNING STABILIZER	28480	08565-20079
W11	08569-20031	7	1	CABLE ASSY-EXTERNAL MIXER	28480	08569-20031
W12	08569-20061	3	1	CABLE ASSEMBLY, EXTERNAL IF	28480	08569-20061
W13				NOT ASSIGNED		
W14	08569-20027	1	1	CABLE ASSY-1ST MIXER, IF OUTPUT	28480	08569-20027
W15	08565-20083	5	1	CABLE ASSY-2.0 MHZ LPF INPUT	28480	08565-20083
W16	08565-20084	6	1	CABLE ASSY-2.0 MHZ LPF OUTPUT	28480	08565-20084
W17	08565-20087	9	1	CABLE ASSY-2ND CONVERTER INPUT	28480	08565-20087
W18	08569-20042	0	1	CABLE ASSY-2ND CONVERTER OUTPUT	28480	08569-20042
W19	08565-20085	7	1	CABLE ASSY-2ND CONVERTER BY PASS	28480	08565-20085
W20	08569-20059	9	1	CABLE ASSY-1ST LO OUTPUT	28480	08569-20059

See introduction to this section for ordering information
*Indicates factory selected value

Table 6-3. Replaceable Parts

Reference Designation	HP Part Number	C D	Qty	Description	Mfr Code	Mfr Part Number
W21	08565-60059	9	1	CABLE ASSY-321.4 IF (YELLOW)	28480	08565-60059
W22	08565-60085	1	1	CABLE ASSY-21.4 IF (GREEN)	28480	08565-60085
W23	08565-60061	3	1	CABLE ASSY-100MHZ CAL OUTPUT (BLUE)	28480	08565-60061
W24	08565-60086	2	1	CABLE ASSY-21.4MHZ IF OUTPUT (VIOLET)	28480	08565-60086
W25	08565-60070	4	1	CABLE ASSY-EXT TRIGGER INPUT (BROWN)	28480	08565-60070
W26	08565-60080	6	1	CABLE ASSY-YTO TO AUX B (RED)	28480	08565-60080
W27	08565-60081	7	1	CABLE ASSY-YTF TO AUX B (ORANGE)	28480	08565-60081
W28	08565-60066	8	2	CABLE ASSY-RIBBON, FREQ CONTROL	28480	08565-60066
W29	08569-60031	1	1	CABLE ASSY-RIBBON,FRONT SW BD, 50-PIN	28480	08569-60031
W30	08565-60064	6	1	CABLE ASSY-RIBBON, FRONT SWITCH BOARD	28480	08565-60064
W31	08569-60030	0	1	CABLE ASSY-RIBBON, REAR SWITCH BOARD	28480	08569-60030
W32	08565-60066	8		CABLE ASSY-RIBBON, FREQ DISPLAY	28480	08565-60066
W33	08569-60081	7	1	CABLE ASSY-VIDEO	28480	08569-60081
W34	08569-60019	5	1	CABLE ASSY-CRT	28480	08569-60019
W35	08565-60091	9	1	CABLE ASSY-X-Y DEFLECTION	28480	08565-60091
W36				NOT ASSIGNED		
W37				NOT ASSIGNED		
W38				NOT ASSIGNED		
W39	08569-60037	7		CABLE HARNESS-1ST CONVERTER	28480	08569-60037

See introduction to this section for ordering information
*Indicates factory selected value

Table 6-3. Replaceable Parts

Reference Designation	HP Part Number	C D	Qty	Description	Mfr Code	Mfr Part Number
				OPTION 001 CHASSIS PARTS - ELECTRICAL		
AT9	08565-60090	8		ATTENUATOR, COAX, 30 DB	28480	08565-60090
CR1	1901-0028	5	1	DIODE-PWR RECT 400V 750MA DO-29	28480	1901-0028
K6	3106-0022	5		SWITCH-COAX SPDT;FAIL-SAFE OPN;50	28480	3106-0022
S3	3101-2426	7	1	SWITCH-PB DPDT ALTNG .25A 115VAC	28480	3101-2426
U2	0955-0149	3	1	MODULE-DIODE RECOVERY DRIVE FREQ=100MHZ	28480	0955-0149
W1	08569-20021	5	1	CABLE ASSY-INPUT	28480	08569-20021
W40	08569-20037	3	1	CABLE ASSY-SWITCH TO 3DB PAD	28480	08569-20037
W41	08569-20022	6	1	CABLE ASSY-SWITCH TO ATTENUATOR	28480	08569-20022

See introduction to this section for ordering information
*Indicates factory selected value

Table 6-3. Replaceable Parts

Reference Designation	HP Part Number	C D	Qty	Description	Mfr Code	Mfr Part Number
				CHASSIS PARTS - ELECTRICAL OPTION 400		
B1	3160-0358	4	1	FAN-TBAX 120-CFM 42-56VDC 1.65KV-DIEL	28480	3160-0359
C5	0180-1866	0	1	CAPACITOR-FXD 1UF +-10% 600VDC POLYE	28480	0180-1866
R1	0698-3391	7	1	RESISTOR 21.5 1% .5W F TC=0+-100	28480	0698-3391

See introduction to this section for ordering information
*Indicates factory selected value

Table 6-3. Replaceable Parts

Reference Designation	HP Part Number	C D	Qty	Description	Mfr Code	Mfr Part Number
				CHASSIS PARTS - MECHANICAL		
	0360-0268	6	2	TERMINAL-SLDR LUG LK-MTG FOR-#6-SCR	28480	0360-0268
	0520-0163	0	2	SCREW-MACH 2-56 .188-IN-LG 82 DEG	00000	ORDER BY DESCRIPTION
	0590-1251	6	1	NUT-SPCLY 15/32-32-THD .1-IN-THK .562-WD	00000	ORDER BY DESCRIPTION
	1250-1753	4	1	HARDWARE- J2 CONNECTOR	28480	1250-1753
	1400-0093	2	6	STRAP,SECURING,POWER CABLE TO DISPLAY MOTHERBOARD,POWER SUPPLY CABLE TO CHASSI	28480	1400-0093
	2190-0007	2	4	WASHER-LK INTL T NO. 6 .141-IN-ID	28480	2190-0007
	2190-0016	3	6	WASHER-LK INTL T 3/8 IN .377-IN-ID	28480	2190-0016
	2190-0068	5	3	WASHER-LK INTL T 1/2 IN .505-IN-ID	28480	2190-0068
	2190-0104	0	1	WASHER-LK INTL T 7/16 IN .439-IN-ID	28480	2190-0104
	2200-0103	2	7	SCREW-MACH 4-40 .25-IN-LG PAN-HD-POZI	00000	ORDER BY DESCRIPTION
	2200-0107	6	4	SCREW-MACH 4-40 .375-IN-LG PAN-HD-POZI	00000	ORDER BY DESCRIPTION
	2200-0165	6	2	SCREW-MACH 4-40 .25-IN-LG 82 DEG	00000	ORDER BY DESCRIPTION
	2260-0001	5	15	NUT-HEX-DBL-CHAM 4-40-THD .094-IN-THK	28480	2260-0001
	2360-0113	2	26	SCREW-MACH 6-32 .25-IN-LG PAN-HD-POZI	00000	ORDER BY DESCRIPTION
	2360-0114	3	2	SCREW-MACH 6-32 .25-IN-LG 82 DEG	00000	ORDER BY DESCRIPTION
	2360-0115	4	26	SCREW-MACH 6-32 .312-IN-LG PAN-HD-POZI	00000	ORDER BY DESCRIPTION
	2360-0131	4	4	SCREW-MACH 6-32 1.125-IN-LG PAN-HD-POZI	00000	ORDER BY DESCRIPTION
	2360-0198	3	1	SCREW-MACH 6-32 .438-IN-LG 100 DEG	00000	ORDER BY DESCRIPTION
	2360-0236	0	4	SCREW-MACH 6-32 .812-IN-LG PAN-HD-POZI	00000	ORDER BY DESCRIPTION
	2360-0360	1	1	SCREW-MACH 6-32 .438-IN-LG 100 DEG	28480	2360-0360
	2420-0001	5	4	NUT-HEX-W/LKWR 6-32-THD .109-IN-THK	00000	ORDER BY DESCRIPTION
	2420-0003	7	4	NUT-HEX-DBL-CHAM 6-32-THD .094-IN-THK	00000	ORDER BY DESCRIPTION
	2510-0138	0	3	SCREW-MACH 8-32 3-IN-LG PAN-HD-POZI	00000	ORDER BY DESCRIPTION
	2510-0192	6	16	SCREW-MACH 8-32 .25-IN-LG 100 DEG	00000	ORDER BY DESCRIPTION
	2580-0003	5	3	NUT-HEX-W/LKWR 8-32-THD .125-IN-THK	00000	ORDER BY DESCRIPTION
	2680-0172	1	4	SCREW-MACH 10-32 .375-IN-LG 100 DEG	28480	2680-0172
	2950-0001	8	6	NUT-HEX-DBL-CHAM 3/8-32-THD .094-IN-THK	00000	ORDER BY DESCRIPTION
	2950-0035	8	3	NUT-HEX-DBL-CHAM 15/32-32-THD	00000	ORDER BY DESCRIPTION
	2950-0132	6	1	NUT-HEX-DBL-CHAM 7/16-28-THD .094-IN-THK	00000	ORDER BY DESCRIPTION
	3030-0220	4	9	SCREW-SKT HD CAP 2-56 .188-IN-LG SST-300	00000	ORDER BY DESCRIPTION
	3050-0098	6	2	WASHER-FL MTLC NO. 2 .094-IN-ID	28480	3050-0098
	3050-0152	3	6	WASHER-SHLDR NO. 8 .172-IN-ID .438-IN-OD	28480	3050-0152
	3050-0027	1	3	WASHER-FL MTLC NO. 10 .203-IN-ID	28480	3050-0027
	3050-0837	1	4	WASHER-FL MTLC NO. 6 .149-IN-ID	28480	3050-0837
	8120-2625	3	1	CABLE ASSY 18AWG 2-CNDCT BLK-JKT	28480	8120-2625
	5020-8805	8	1	FRONT FRAME	28480	5020-8805
	5020-8806	9	1	REAR FRAME	28480	5020-8806
	5020-8837	6	3	CORNER STRUT	28480	5020-8837
	08565-00009	3	1	BRACKET-SUPPORT, P.C. BOARD	28480	08565-00009
	5021-3251	0	1	PLATE-RIGHT SIDE	28480	5021-3251
	08565-00018	4	1	BRACKET-REAR,VCXO & 3RD CONVERTER	28480	08565-00018
	08565-20065	3	1	DIVIDER-FRONT VERTICAL	28480	08565-20065
	08565-20100	7	1	STRUT-LOWER RIGHT	28480	08565-20100
	08569-00001	9	1	SHIELD-X-Y AMPLIFIER	28480	08569-00001
	08569-00002	0	1	SHIELD-Z AXIS	28480	08569-00002
	08569-00005	3	1	BRACKET-MOTHERBOARD MOUNTING	28480	08569-00005
	08569-00007	5	1	PLATE-TRANSFORMER MOUNTING	28480	08569-00007
	08569-00008	6	1	DIVIDER-CENTER	28480	08569-00008
	08569-00009	7	1	STIFFENER-CENTER DIVIDER	28480	08569-00009
	08569-00011	1	1	BRACKET-FRONT, I/O P.C. BOARD	28480	08569-00011
	08569-00015	5	1	BRACKET-VCXO & 3RD CONVERTER	28480	08569-00015
	08569-00024	6	1	BRACKET-POWER SUPPLY TIE DOWN	28480	08569-00024
	08569-20025	9	1	CLAMP-CRT SUPPORT	28480	08569-20025
	08569-60041	3	1	KNOB ASSEMBLY-VIDEO FILTER	28480	08569-60041
	1460-1345	5	2	LEG-BOTTOM COVER	28480	1460-1345
	4324-0105	8	2	PAD-TOP COVER	28480	4324-0105
	5040-7201	8	4	FOOT(STANDARD)	28480	5040-7201
	5040-7202	9	1	TRIM, TOP	28480	5040-7202
	5040-7219	8	1	STRAP, HANDLE, CAP-FRONT	28480	5040-7219
	5040-7220	1	1	STRAP, HANDLE, CAP-REAR	28480	5040-7220
	5040-7221	2	4	FOOT-REAR	28480	5040-7221
	5040-7235	8	1	STRAP HANDLE-SIDE	28480	5040-7235
	5040-7253	0	1	BEZEL-CRT	28480	5040-7253
	5060-0428	9	1	FILTER ASSY:AIR	28480	5060-0428
	5060-9835	0	1	COVER-TOP	28480	5060-9835
	5060-9847	4	1	COVER-BOTTOM	28480	5060-9847
	5060-9862	3	1	COVER-SIDE (STD.)	28480	5060-9862
	5060-9942	0	1	COVER-RIGHT SIDE	28480	5060-9942
	5061-2033	8	1	INFO TRAY ASSEMBLY KIT	28480	5061-2033
	08569-90036	9	1	INFORMATION CARD-ENGLISH	28480	08569-90036
	08569-00043	9	1	PANEL-RIGHT DRESS FRONT	28480	08569-00043
	08569-60042	4	1	KNOB ASSEMBLY-SWEEP-TIME/DIV	28480	08569-60042
	08569-00019	9	1	BRACKET-MIXER MOUNTING	28480	08569-00019
	0905-0968	9	1	GASKET-INSULATING YTO	28480	0905-0968

See introduction to this section for ordering information
*Indicates factory selected value

Table 6-3. Replaceable Parts

Reference Designation	HP Part Number	C D	Qty	Description	Mfr Code	Mfr Part Number
	3050-0647	1	2	WASHER-INSULATING SHOULDER	28480	3050-0647
	1490-0841	7	4	COUPLER-SHAFT,DISPLAY ADJUST BOARD	28480	1490-0841
	08569-20018	0	4	SHAFT-DISPLAY ADJUST BOARD	28480	08569-20018
	08569-00012	2	1	BRACKET-P.C. BOARD GUIDE	28480	08569-00012
	08569-00013	3	1	HOUSING-H.V. POWER SUPPLY	28480	08569-00013
	08569-00047	3	1	SHIELD-BIAS ADJUST	28480	08569-00047
	08569-60033	3	1	SHIELD ASSEMBLY-DATA CONVERTER	28480	08569-60033
	08569-00044	0	1	PANEL-REAR	28480	08569-00044
	08569-00026	8	1	SHIELD-HP-IB	28480	08569-00026
	08569-60018	4	1	SHIELD ASSEMBLY-CRT	28480	08569-60018
	08569-60017	3	1	CRT REPLACEMENT ASSEMBLY	28480	08569-60017
	0460-0114	3		TAPE-INDL 1.25-IN-W .25-IN-T POLYU-FM	87730	TESA 761-4763
	4320-0311	0	1	RUBBER-CRT	28480	4320-0311
	7120-3812	1	1	LABEL-SAFETY WARNING, CRT	28480	7120-3812
	08569-00025	7	1	BRACKET-INPUT CONNECTOR & 50 OHM LOAD	28480	08569-00025
	08558-20036	9	1	CIRCUIT ENCLOSURE, 8TH IF ASSEMBLY	28480	08558-20036
	08558-20037	0	1	CIRCUIT ENCLOSURE-1ST IF ASSEMBLY	28480	08558-20037
	08558-20087	0	2	CIRCUIT ENCLOSURE-4TH & 5TH,IF ASSY	28480	08558-20087
	08565-00013	9	1	BRACKET-IF ASSEMBLY, FRONT	28480	08565-00013
	08565-00023	1	1	BRACKET-IF ASSEMBLY, REAR	28480	08565-00023
	08565-20051	7	2	CIRCUIT ENCLOSURE-3RD & 7TH, IF ASSY	28480	08565-20051
	08565-20093	7	1	CIRCUIT ENCLOSURE-6TH, IF ASSEMBLY	28480	08565-20093
	08565-20096	0	1	CIRCUIT ENCLOSURE-2ND, IF ASSEMBLY	28480	08565-20096
	08569-00022	4	1	BRACKET-LOWER RF	28480	08569-00022
	1520-0094	7	4	SHOCK MOUNT-RUBBER, FAN	28480	1520-0094
	08565-00042	4	2	BRACKET-FAN	28480	08565-00042
	08565-00056	0	1	COVER-FAN	28480	08565-00056
	08565-20060	8	4	STUD-SHOCK MOUNT, FAN	28480	08565-20060
	1251-1286	0	1	CONNECTOR-17-PIN F,MAIN CABLE HARNESS	28480	1251-1286
	1251-3957	6	1	CONNECTOR-10-PIN F,MAIN CABLE HARNESS	28480	1251-3957
	1251-3963	4	1	CONNECTOR KEYS-MAIN CABLE HARNESS	28480	1251-3963
	1251-4050	2	1	CONNECTOR-15-PIN F,MAIN CABLE HARNESS	28480	1251-4050
	3100-3403	0	1	SWITCH-VIDEO FILTER	28480	3100-3403
	0380-0089	1	2	STANDOFF-HEX 1.25-IN-LG 8-32THD	00000	ORDER BY DESCRIPTION
	0590-0382	2	9	THREADED INSERT-NUT 2-56 .059-IN-LG SST	28480	0590-0382
	0624-0268	6	99	SCREW-TPG 4-24 .375-IN-LG PAN-HD-POZI	00000	ORDER BY DESCRIPTION
	1400-0017	0	2	CLAMP-CABLE .312-DIA .375-WD NYL	28480	1400-0017
	6960-0001	3	1	PLUG-HOLE DOME-HD FOR .375-D-HOLE STL	28480	6960-0001
	7120-4835	0	1	LABEL-INFORMATION .75-IN-WD 2-IN-LG PPR	28480	7120-4835
	8090-0394	4	3	SOLDER-HS 0-IN-OD PVIF CLR INSUL	28480	8090-0394
	8090-0402	5	1	SOLDER SLEEVE 0-IN-OD PVIF CLR INSUL	28480	8090-0402
	1400-0025	0	5	CLAMP-CABLE .5-DIA .5-WD NYL	28480	1400-0025
	08565-00117	4	1	BRACKET-MOUNTING, RF SWITCH	28480	08565-00117
	08565-00118	5	1	BRACKET-MOUNTING, ATTENUATOR	28480	08565-00118
	9135-0052	8		RFI CRT FACEPLATE 4.235"W	28480	9135-0052
				CHASSIS PARTS - MECHANICAL		
				OPTION 001		
	0370-0606	7	1	BEZEL-PUSHBUTTON 0.330-IN SQ: JADE GRAY	28480	0370-0606
	0520-0173	2	2	SCREW-MACH 2-56 .188-IN-LG PAN-HD-POZI	00000	ORDER BY DESCRIPTION
	2190-0014	1	2	WASHER-LK INTL T NO. 2 .089-IN-ID	28480	2190-0014
	2200-0151	0	2	SCREW-MACH 4-40 .75-IN-LG PAN-HD-POZI	00000	ORDER BY DESCRIPTION
	2260-0009	3	2	NUT-HEX-W/LKWR 4-40-THD .094-IN-THK	00000	ORDER BY DESCRIPTION
	2360-0117	6	4	SCREW-MACH 6-32 .375-IN-LG PAN-HD-POZI	00000	ORDER BY DESCRIPTION
	5040-8821	0	1	PUSHBUTTON-SQUARE, OLIVE GRAY	28480	5040-8821
	08569-00042	8	1	PANEL-DRESS, FRONT DISPLAY	28480	08569-00042
				CHASSIS PARTS - MECHANICAL		
				OPTION 002		
	0360-1666	0	1	TERMINAL STRIP 5-TERM PHEN 1.89-IN-L	28480	0360-1666
	1400-0049	8	1	CLAMP-CABLE .812-DIA .5-WD NYL	28480	1400-0049
	2360-0197	2	1	SCREW-MACH 6-32 .375-IN-LG PAN-HD-POZI	00000	ORDER BY DESCRIPTION
	3050-0227	3	1	WASHER-FL MTLC NO. 6 .149-IN-ID	28480	3050-0227

See introduction to this section for ordering information
*Indicates factory selected value

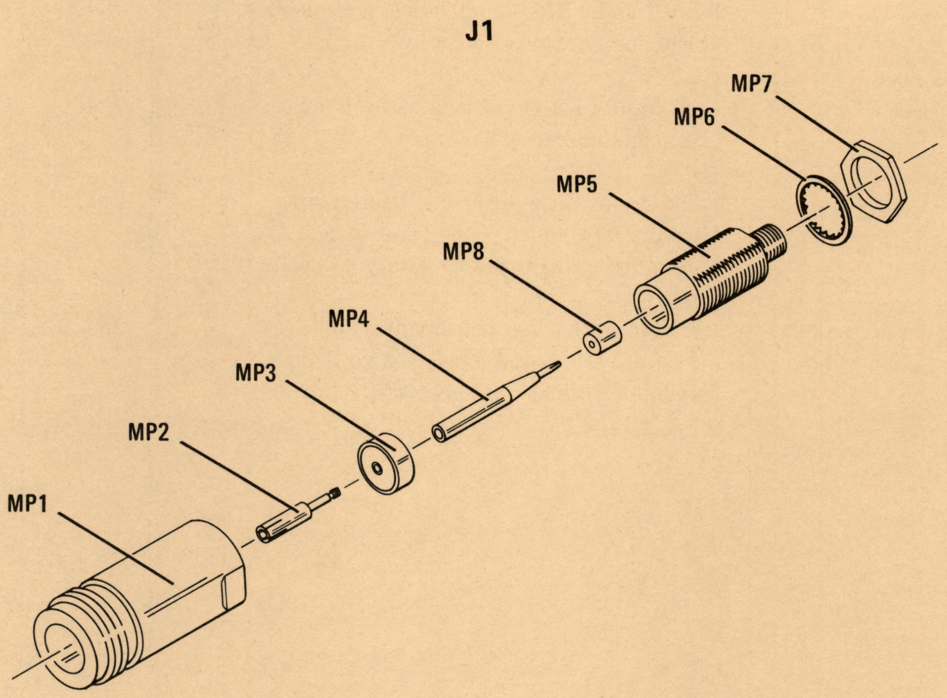

Reference Designation	HP Part Number	C D	Qty	Description	Mfr Code	Mfr Part Number
J1	08569-60079	7	1	Connector Assy (Type N)	28480	08569-60079
J1MP1	1250-0914	7	1	Body: RF Connector (Type N)	02660	131-150
J1MP2	1250-0915	8	1	Contact: RF Connector (Type N)	02660	131-149
J1MP3	5040-0306	0	1	Insulator	28480	5040-0306
J1MP4	08555-20093	5	1	Center Conductor	28480	08555-20093
J1MP5	08555-20094	6	1	Body: Bulkhead	28480	08555-20094
J1MP6	2190-0104	0	1	Washer: Lock 0.439 In. ID	00000	OBD
J1MP7	2950-0132	6	1	Nut: Hex 7/16 – 28	00000	OBD
J1MP8	08761-2027	4	1	Insulator	28480	08761-2027

Figure 6-1. Input 50Ω Connector J1, Exploded View

Table 6-4. Rack Mount and Handle Kits

Item	HP Part Number	C D	Description	Mfr Code	Manufacturer's Part Number
1	5061-0090	3	Front Handle Kit—two handles, seven inches high, and necessary hardware	28480	5061-0090
2	5061-0078	7	Rack Mount Kit—two flanges, seven inches high, and necessary hardware	28480	5061-0078
3	5061-0084	5	Rack Mount Kit with Front Handles—two handles, seven inches high; two flanges, seven inches high; and necessary hardware	28480	5061-0084
4	5061-2072	5	Rack Mount Kit for instrument with previously mounted handles—two flanges, seven inches high, and necessary hardware	28480	5061-2072

SECTION VII
MANUAL BACKDATING CHANGES

7-1. INTRODUCTION

7-2. This section contains information for adapting this manual to earlier HP 8569B Spectrum Analyzers. If the serial number prefix of your spectrum analyzer appears on the title page of this manual, the contents of the manual are directly applicable to your instrument. If, however, your specturm analyzer has serial number prefix 2229A, you must adapt this manual to your instrument by changing it as indicated in this section.

7-3. If your instrument serial number is not listed on the title page of this manual or is not 2229A, it may be documented in a yellow MANUAL CHANGES supplement. For additional important information about serial number coverage, refer to INSTRUMENTS COVERED BY MANUAL in Section I.

7-4. MANUAL CHANGE INSTRUCTIONS

Page 5-5, Table 5-1:
Delete A21R132 OFFSET 2.

Page 5-40, Paragraph 5-17:
Delete steps 11 through 26 and replace with the following steps:

11. Switch SWEEP SOURCE to INT.

Vertical Gain Adjustment

12. Adjust front-panel VERT POSN screwdriver adjustment to set CRT trace at bottom horizontal graticule line. Note voltage at A21TP5.

13. Connect 100 MHz CAL OUTPUT signal to INPUT 50Ω connector and adjust front-panel TUNING control to peak 100MHz signal on CRT display. Set RESOLUTION BW to 1 MHz.

14. Adjust front-panel REF LEVEL CAL screwdriver adjustment for 800mV plus offset as measured at A21TP5. (Be sure signal is peaked with front-panel TUNING control.)

15. Adjust A5R25 VERT GAIN to set signal level on top horizontal graticiule line.

16. Disconnect 100 MHz CAL OUTPUT signal and repeat steps 12 through 15 until no further adjustment is necessary.

17. When adjustment is complete, set LINE switch OFF, disconnect power cord, and install HP 8569B top cover.

Page 5-114:
Add paragraph 7-4 of this section (including Figures 7-1 and 7-2).

Page 6-19, Table 6-3:
Change A6R28 to HP Part Number 0699-0172, Check Digit 8, RESISTOR 3M 5% 1W C TC = 0 ± 250.
Change A6R29 to HP Part Number 2100-3358, Check Digit 3, RESISTOR-TRMR 1M 20% C SIDE-ADJ 1-TRN.
Change A6R30 to HP Part Number 0699-0551, Check Digit 7, RESISTOR 5.3M 5% 1W C TC = 0 ± 250.
Change A6A1 to HP Part Number 08569-60006, Check Digit 0, TRANSFORMER ASSEMBLY-HIGH VOLTAGE.

Page 6-22, Table 6-3:
Delete A8C12 through C20.
Add A8L1, HP Part Number 9100-0210, Check Digit 1, INDUCTOR RF CH-MLD 100UH 5% .166DX.385LG
Delete A8TP11.
Change A8U16 to HP Part Number 1820-2592, Check Digit 0, IC OSC TTL LS.

Page 6-23, Table 6-3:
Delete A8U40 through U42.

Page 6-24, Table 6-3:
Change A9C2, C3, C5, C6, C14, C16, C17, C18, and C19 to HP Part Number 0160-2055, Check Digit 9, CAPACITOR-FXD .01UF +80−20% 100VDC CER.
Change A9C12, C22, C26, C28, and C70 to HP Part Number 0160-4084, Check Digit 8, CAPACITOR-FXD .1UF ±-20% 50VDC CER.
Delete A9C79.

Page 6-25, Table 6-3:
Change A9J1 to HP Part Number 1250-0836, Check Digit 2, CONNECTOR-RF SMC M PC 50-OHM.
Delete A9L4.

Page 6-26, Table 6-3:
Delete A9R80.

Page 6-56, Table 6-3:
Delete A21CR41 through A21CR43

Page 6-58, Table 6-3:
Change A21R69 to HP Part Number 0698-3152, Check Digit 8, RESISTOR 3.48K 1% .125W F TC=0±100.

Page 6-59, Table 6-3:
Change A21R114 to HP Part Number 0698-6721, Check Digit 3, RESISTOR 19K 1% .125W F TC=0±25.
Delete A21R132.

Page 6-60, Table 6-3:
Delete A21CR41 through A21CR43.

Page 6-62, Table 6-3:
Change A21R69 to HP Part Number 0698-3152, Check Digit 8, RESISTOR 3.48K 1% .125W F TC=0±100.

Page 6-63, Table 6-3:
Change A21R114 to HP Part Number 0698-6721, Check Digit 3, RESISTOR 19K 1% .125W F TC=0±25.
Delete A21R132.

Page 8-75/8-76, Figure 8-20:
Change −2350V to −2450V in Function Block E, next to Function Block G, and above the CRT.
Change −2400V to −2500V next to Function Block G.
Change −1525V to −1650V next to Function Block H.
Change A6A1 in Function Block D to HP Part Number 08569-60006.
Change A6R28 to 3M.
Change A6R29 to 1M.
Change A6R30 to 5.3M

Page 8-104, Figure 8-28:
Replace Figure 8-28 with Figure 7-3.

Page 8-105/8-106, Figure 8-29:
Replace Function Blocks C, E, and M with Figure 7-4.

Page 8-115/8-116, Figure 8-31:
Delete A9L4 and A9R80.

Page 8-117/8-118, Figure 8-32:
Delete A9L4 in Function Block I.
Change all −15VF1 to −15VF.

Page 8-119, Figure 8-32:
Delete A9R80 in Function Block F.
Change all −15VF1 and −15VF2 to −15VF.

Page 8-203, Figure 8-66:
Replace Figure 8-66 with Figure 7-5.

Page 8-204, Figure 8-67:
Replace Figure 8-67 with Figure 7-6.

Page 8-205/8-206, Figure 8-68:
Replace Function Blocks D and G with Figure 7-7.

7-5. VIDEO OFFSET ADJUSTMENT

REFERENCE:

A21 Schematic

DESCRIPTION:

First the vertical gain is adjusted in A5 X-Y Amplifier Assembly to place the signal on the REFERENCE LEVEL graticule line of the CRT with a specified voltage at the input to A21 Video Assembly. Then the LIN potentiometer in A22 Log Amplifier Assembly is adjusted so that the signal remains at the REFERENCE LEVEL line as the AMPLITUDE SCALE is switched between LIN and 10 dB/DIV. Finally, the offset is adjusted in A21 Video Assembly so that the signal remains at the REFERENCE LEVEL line as the AMPLITUDE SCALE is switched between 10 dB/DIV and 5, 2, or 1 dB/DIV.

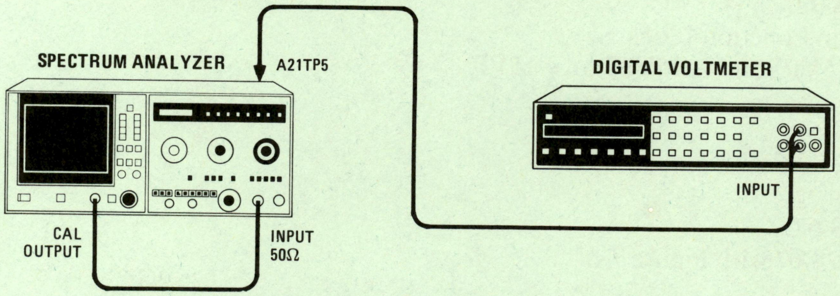

Figure 7-1. Video Offset Adjustment Test Setup

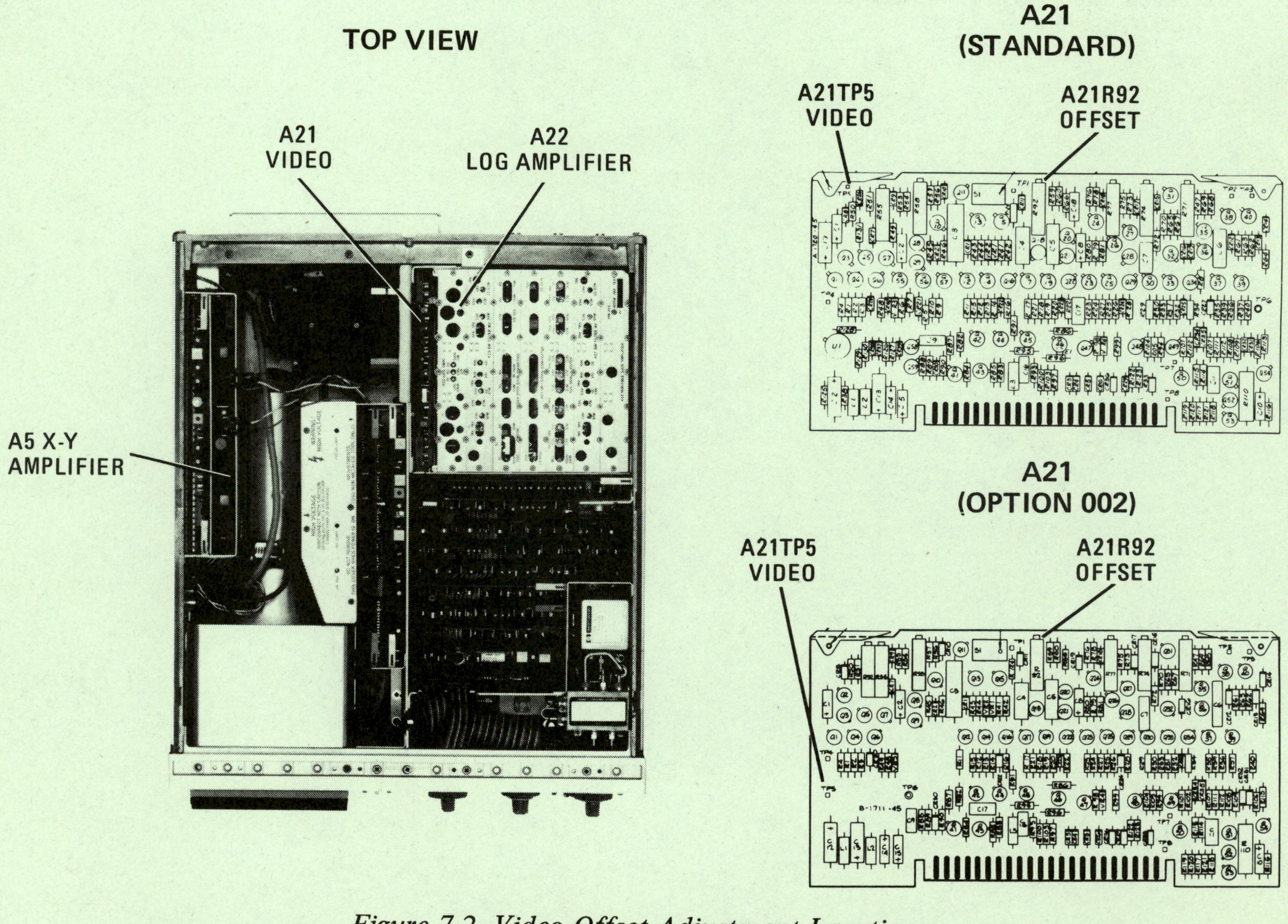

Figure 7-2. Video Offset Adjustment Locations

ADJUSTMENTS

7-5. VIDEO OFFSET ADJUSTMENT (Cont'd)

EQUIPMENT:

Digital Voltmeter . . . . HP 3455A

PROCEDURE:

1. Set LINE switch OFF, disconnect power cord, and remove HP 8569B top cover.

2. Reconnect power cord, set LINE switch on, and connect equipment as shown in Figure 7-1.

3. Set normal (green) settings, except as indicated, and other spectrum analyzer controls as follows:

TRACE A	STORE BLANK
TRACE B	STORE BLANK
FREQUENCY BAND GHz	.01 – 1.8
INPUT ATTEN	10 dB
REF LEVEL dBm	–10
REFERENCE LEVEL FINE	0
RESOLUTION BW	300 kHz
FREQUENCY SPAN MODE	ZERO SPAN
AMPLITUDE SCALE	LIN
AUTO STABILIZER	OFF
TUNING	0.100 GHz

4. With 100 MHz CAL OUTPUT signal disconnected, adjust front-panel VERT POSN to set CRT trace on bottom horizontal graticule line. Note offset voltage measured at A21TP5 VIDEO.

Offset __________ mV

NOTE

Always keep signal peaked with FINE tuning control for maximum output at A21TP5.

5. Connect 100 MHz CAL OUTPUT signal to INPUT 50Ω connector and adjust front panel TUNING control to peak 100 MHz signal on CRT display.

6. Adjust front panel REFERENCE LEVEL FINE control for 800 mV plus offset measured at A21TP5 in step 4.

7. Adjust A5R27 VERT GAIN (Figure 7-2) to set signal level on REFERENCE LEVEL graticule line. (Refer to Horizontal and Veritcal Gain Adjustments.)

8. Disconnect 100 MHz CAL OUTPUT signal and repeat steps 4 through 7 until no further adjustment is necessary.

ADJUSTMENTS

7-5. VIDEO OFFSET ADJUSTMENT (Cont'd)

9. Connect 100 MHz CAL OUTPUT signal to INPUT 50Ω connector and set AMPLITUDE SCALE to 10 dB/DIV. Adjust REFERENCE LEVEL controls for a measurement at A21TP5 of 800 mV plus offset measured in step 4.

10. Set AMPLITUDE SCALE to LIN and adjust A22R34 LIN for 800 mV plus offset, measured at A21TP5. (Precise adjustment of vertical gain, steps 4 through 7, is critical for adjustment of A22R34 LIN.)

11. Adjust A21R92 OFFSET for no signal level change when AMPLITUDE SCALE is switched between 10 dB/DIV and 1 dB/DIV positions.

12. Set AMPLITUDE SCALE to 10 dB/DIV and adjust front panel VERT POSN to set signal level on REFERENCE LEVEL graticule line.

13. Disconnect 100 MHz CAL OUTPUT signal and set AMPLITUDE SCALE to LIN. Check that CRT trace is on bottom horizontal graticule line. If not, repeat steps 4 through 8.

14. Connect 100 MHz CAL OUTPUT signal to INPUT 50Ω connector. Select each AMPLITUDE SCALE (10 dB/DIV, 5 dB/DIV, 2 dB/DIV, 1 dB/DIV, and LIN) and check that signal level does not shift more than 0.5 division from REFERENCE LEVEL graticule line.

15. When adjustment is complete, set LINE switch OFF, disconnect power cord, and install HP 8569B top cover.

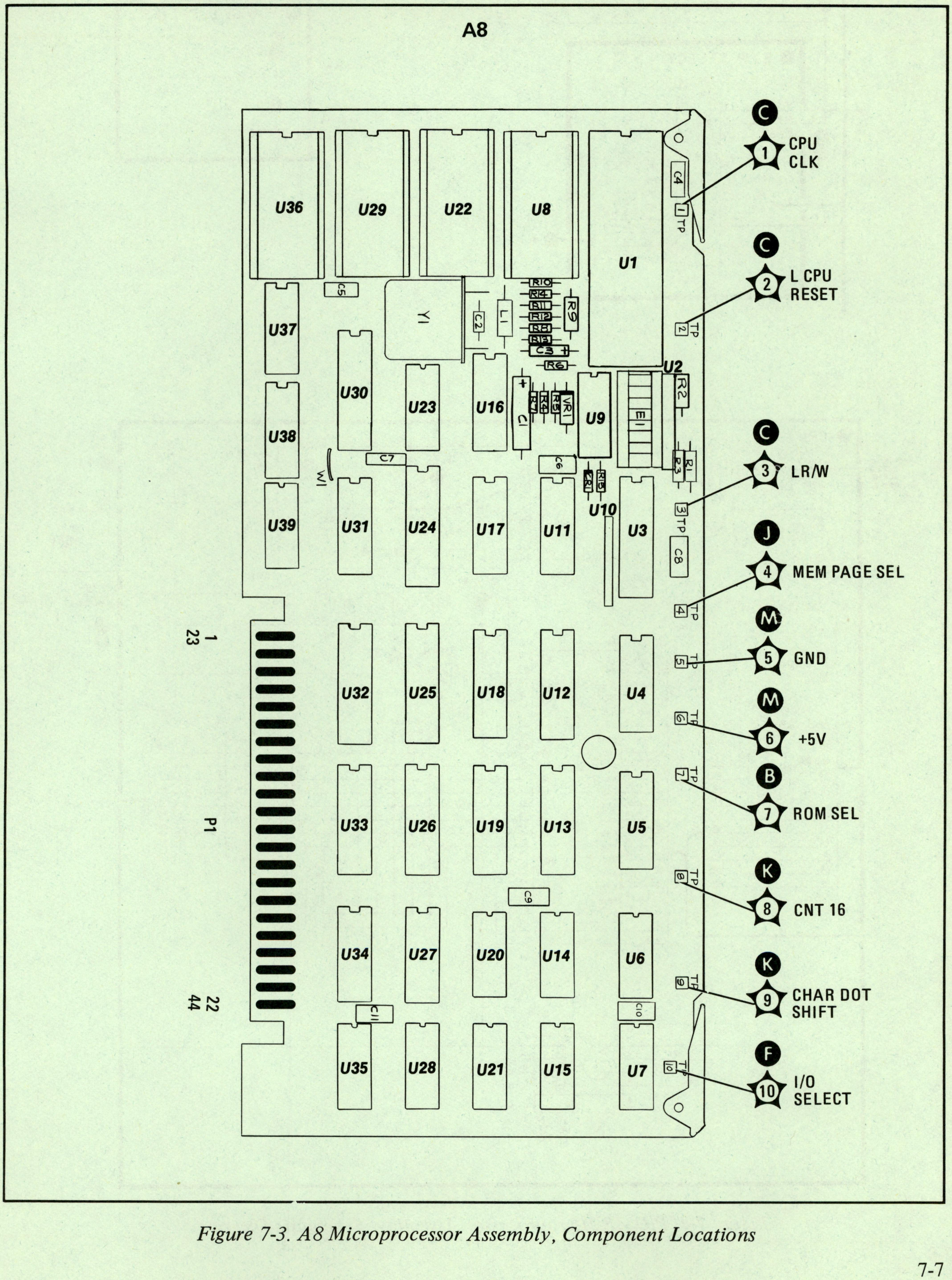

Figure 7-3. A8 Microprocessor Assembly, Component Locations

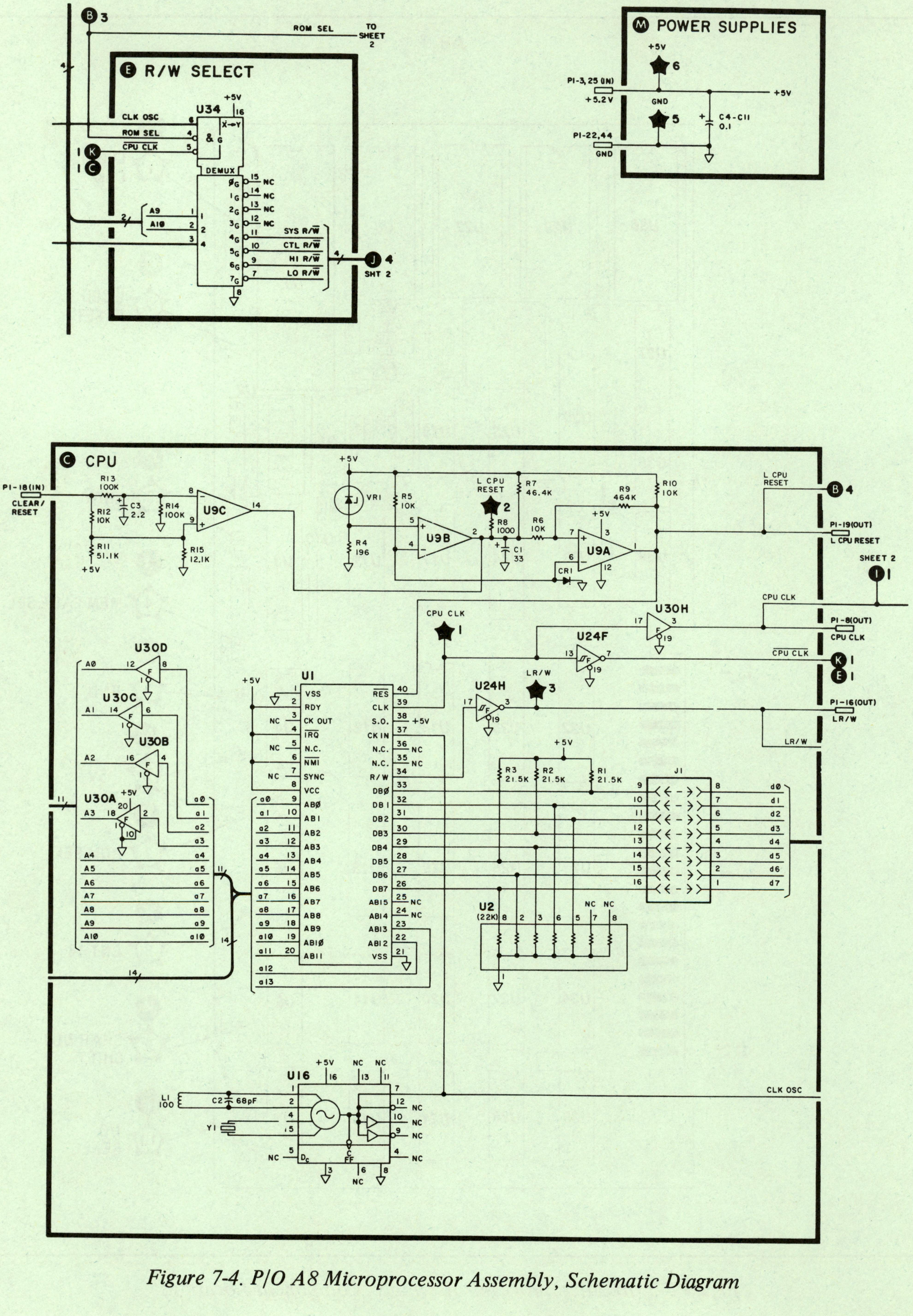

Figure 7-4. P/O A8 Microprocessor Assembly, Schematic Diagram

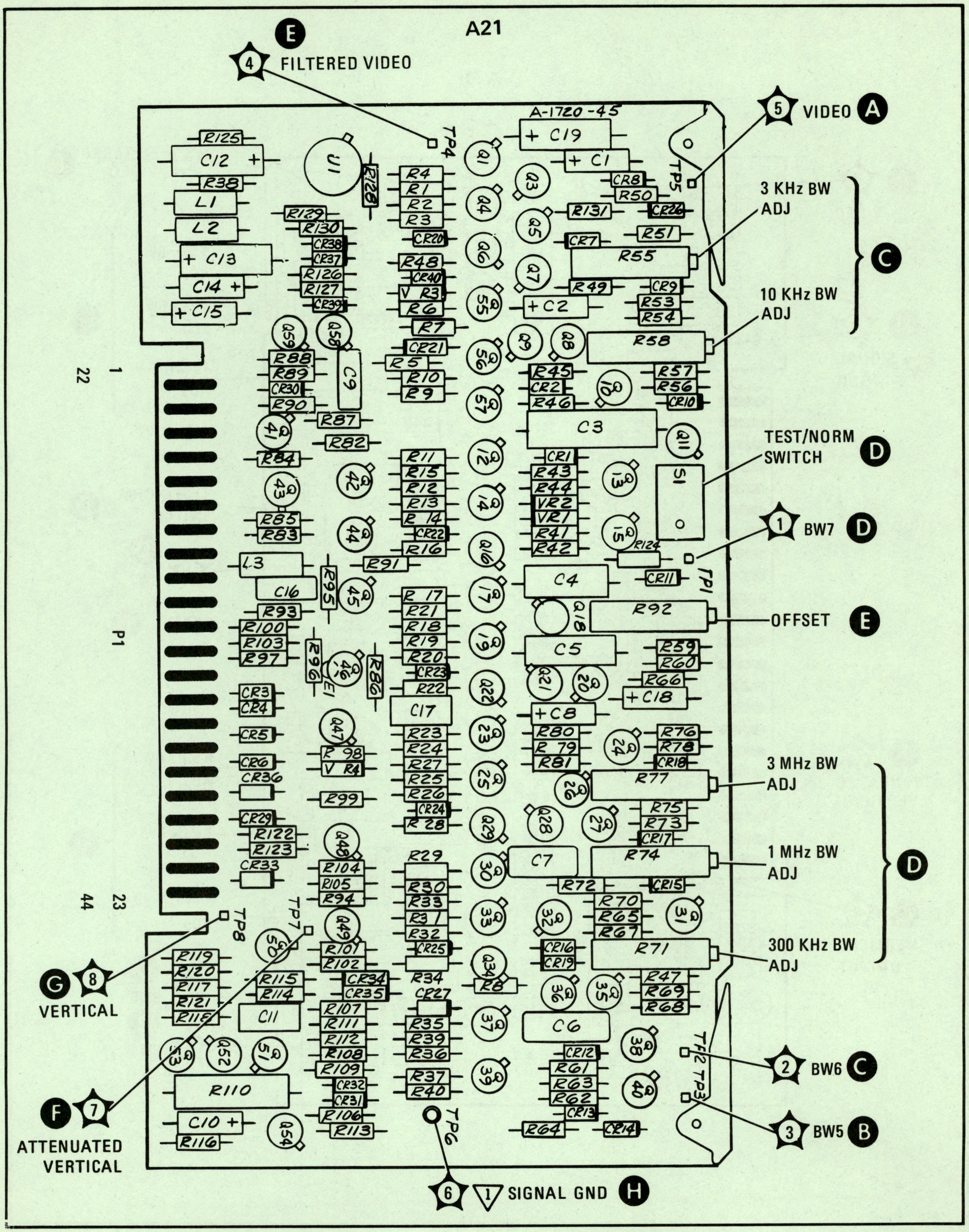

Figure 7-5. A21 Video—100 Hz Assembly, Component Locations

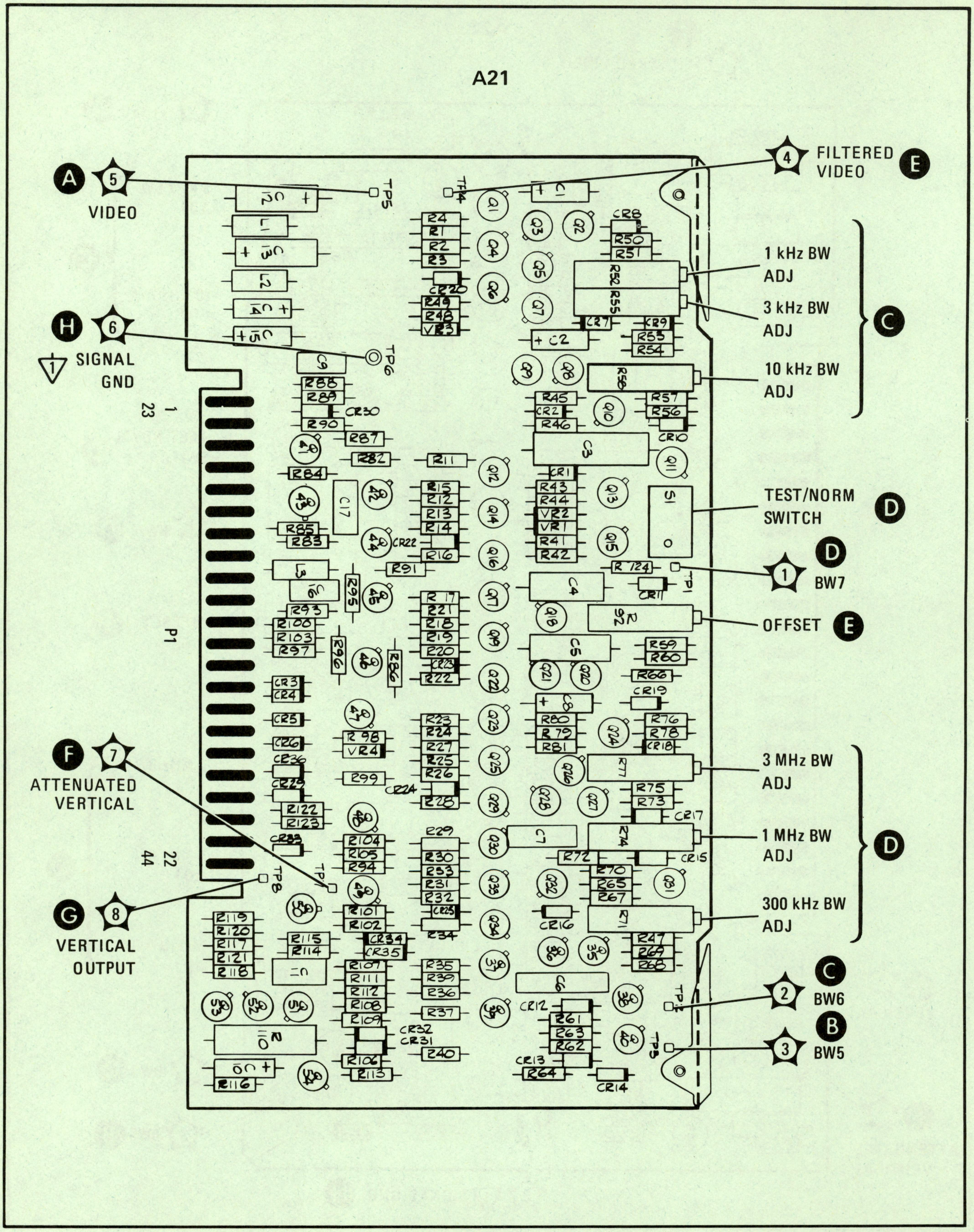

Figure 7-6. A21 Video Assembly (Option 002), Component Locations

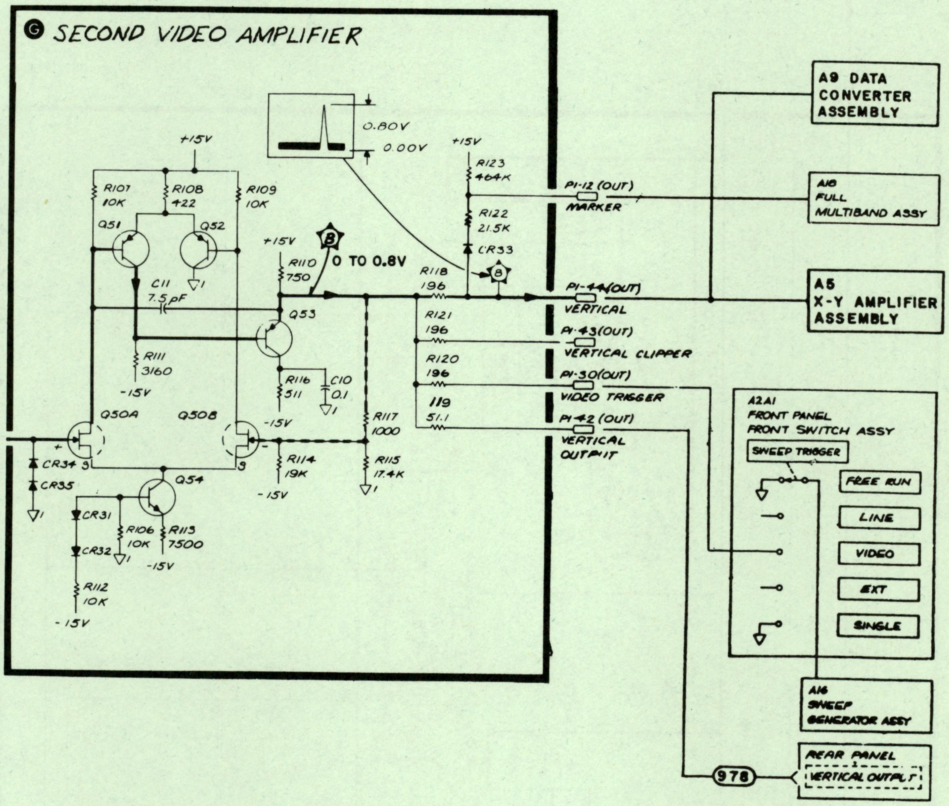

Figure 7-7. P/O A21 Video—100 Hz Assembly, Schematic Diagram (1 of 2)

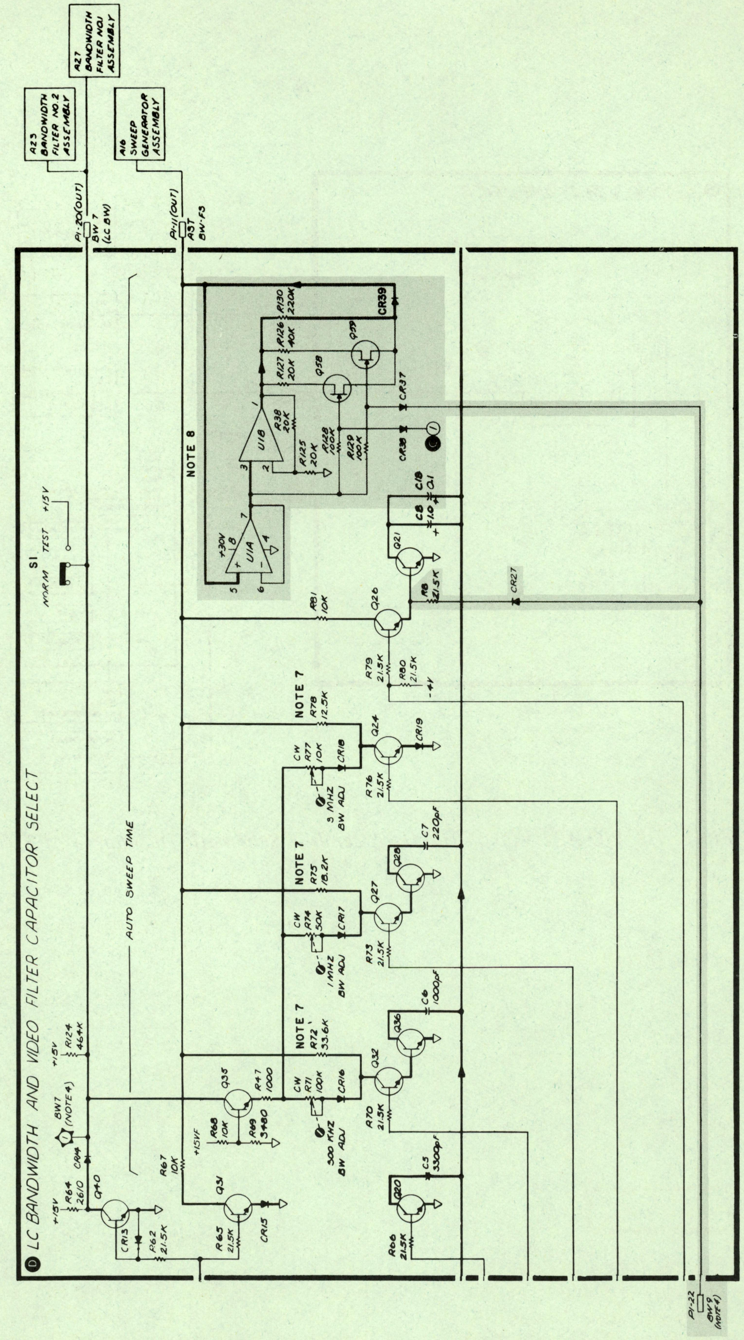

Figure 7-7. P/O A21 Video—100 Hz Assembly, Schematic Diagram (2 of 2)

SECTION VIII
SERVICE

8-1. INTRODUCTION

8-2. This section provides information for troubleshooting and repair of HP Model 8569B Spectrum Analyzer. Circuit descriptions and simplified block diagrams are included with the schematic diagrams of the assemblies. Component location illustrations are also contained in this section. Schematic presentations in this manual show electrical circuit operation and are not intended to serve as wiring diagrams.

WARNING

Troubleshooting and repair of this instrument are performed with power applied to the instrument and protective covers removed. Instrument service should be performed only by service-trained personnel who are aware of the hazards involved. Where maintenance can be performed without power applied, the power should be removed. When any repair is completed, be sure that all safety features, including protective grounds, are intact and functioning.

8-3. SCHEMATIC ARRANGEMENT

8-4. The schematics are arranged in reference designation order. Preceding each schematic are the accompanying circuit description, component location diagram, and related material. See Table 8-1.

8-5. TROUBLESHOOTING

WARNING

With the ac power cable connected, the ac line voltage is present at the terminals of power line assembly A41FL1 (mounted on the rear panel) and at the LINE switch, whether the LINE switch is on or off. When the covers are removed, care must be taken to avoid contact with these exposed terminals, which have voltages capable of causing death. Any maintenance or repair of the opened instrument under voltage should be carried out only by a skilled person who is aware of the hazard involved.

After disconnecting the ac line power cord, allow at least 30 seconds for high-voltage capacitors to discharge before proceeding with maintenance.

8-6. Troubleshooting is generally divided into two maintenance levels in this manual. The first level isolates a trouble to a circuit or assembly. This is done by the use of block diagrams that provide signal levels and techniques to isolate the cause of a malfunction and to identify a defective assembly.

8-7. At the second maintenance level, the trouble is isolated to a component. Schematic diagrams and circuit descriptions for each assembly aid in troubleshooting to this level.

8-8. When troubleshooting a transistor stage, check for a forward bias condition of the base-emitter junction. If this condition exists, the next step is to remove this forward bias by shorting the base to the emitter and checking to see if the collector voltage rises to the approximate level of the supply. The next step, if it is known that the transistor is not operating in a saturated condition, is to check for a voltage drop between emitter and collector. These steps serve only as quick checks, but they will help in getting started with the problem.

8-9. RECOMMENDED TEST EQUIPMENT

8-10. Test equipment required to maintain the HP Model 8569B is listed in Table 1-3. If the equipment listed is not available, equipment that meets the minimum specifications shown may be substituted.

Table 8-1. Service Information Index (1 of 4)

Subject	Location
Repair and Front Panel Assembly/Disassembly Overall Block Diagram	Paragraph 8-11 Figure 8-6
Digital Storage Section Block Diagram Circuit Description	 Figure 8-8 Precedes Figure 8-8
A1 Front Panel Display Assembly Schematic A1A1 Display Switch Assembly Component Locations Circuit Description	 Figure 8-11 Figure 8-9 Precedes Figure 8-9
A2 Front Panel Control Assembly Schematic Component Locations	 Figure 8-13 Figure 8-12
A3 Display Adjust Assembly Schematic Component Locations Circuit Description	 Figure 8-11 Figure 8-10 Precedes Figure 8-10
A4 Z Axis Assembly Schematic Signature Analysis and Troubleshooting Diagram Component Locations Circuit Description	 Figure 8-16 Figure 8-14 Figure 8-15 Precedes Figure 8-14
A5 X-Y Amplifier Assembly Schematic Component Locations Circuit Description	 Figure 8-18 Figure 8-17 Precedes Figure 8-17
A6 High Voltage Power Supply Assembly Schematic Component Locations Circuit Description	 Figure 8-20 Figure 8-19 Precedes Figure 8-19
A7 Input/Output Assembly Schematic Signature Analysis and Troubleshooting Diagram Component Locations Circuit Description	 Figure 8-23 Figure 8-21 Figure 8-22 Precedes Figure 8-21
A8 Microprocessor Assembly Schematic Signature Analysis and Troubleshooting Diagram Component Locations Circuit Description	 Figure 8-29 Figure 8-27 Figure 8-28 Precedes Figure 8-27

Table 8-1. Service Information Index (2 of 4)

Subject	Location
A9 Data Converter Assembly	
Schematic	Figure 8-32
Signature Analysis and Troubleshooting Diagram	Figure 8-30
Component Locations	Figure 8-31
Circuit Description	Precedes Figure 8-30
A10 Display Motherboard Assembly	
Schematic	Figure 8-34
Component Locations	Figure 8-33
A11 DVM Digital Assembly	
Schematic	Figure 8-37
Component Locations	Figure 8-36
Circuit Descriptions	Precedes Figure 8-36
A12 DVM Analog Assembly	
Schematic	Figure 8-41
Component Locations	Figure 8-40
Circuit Descriptions	Precedes Figure 8-40
A13 Relay Driver Assembly	
Schematic	Figure 8-43
Component Locations	Figure 8-42
Circuit Descriptions	Precedes Figure 8-42
A14 Tuning Stabilizer Control Assembly	
Schematic	Figure 8-47
Component Locations	Figure 8-46
Circuit Descriptions	Precedes Figure 8-46
A15 Sweep Attenuator Assembly	
Schematic	Figure 8-49
Component Locations	Figure 8-48
Circuit Descriptions	Precedes Figure 8-48
A16 Sweep Generator Assembly	
Schematic	Figure 8-55
Component Locations	Figure 8-54
Circuit Descriptions	Precedes Figure 8-54
A17 Frequency Control Assembly	
Schematic	Figure 8-57
Component Locations	Figure 8-56
Circuit Descriptions	Precedes Figure 8-56
A18 Full Multiband Assembly	
Schematic	Figure 8-60
Component Locations	Figure 8-59
Circuit Descriptions	Precedes Figure 8-59

Table 8-1. Service Information Index (3 of 4)

Subject	Location
A19 YIG Driver Assembly	
Schematic	Figure 8-62
Component Locations	Figure 8-61
Circuit Descriptions	Precedes Figure 8-61
A20 Bias Assembly	
Schematic	Figure 8-64
Component Locations	Figure 8-63
Circuit Descriptions	Precedes Figure 8-63
A21 Video 100 Hz Assembly	
Schematic	Figure 8-68
Component Locations	Figure 8-66
Component Locations (Option 002)	Figure 8-67
Circuit Descriptions	Precedes Figure 8-66
A22 Log Amplifier Assembly	
Schematic	Figure 8-71
Component Locations	Figure 8-70
Circuit Descriptions	Precedes Figure 8-70
A23 Bandwidth Filter No. 2 Assembly	
Schematic	Figure 8-75
Component Locations	Figure 8-74
Circuit Descriptions	Precedes Figure 8-74
A24 Step Gain Amplifier/Oscillator Assembly	
Schematic	Figure 8-81
Component Locations	Figure 8-79
Component Locations (Option 002)	Figure 8-80
Circuit Descriptions	Precedes Figure 8-79
A25 Up-Down Converter Assembly	
Schematic	Figure 8-83
Component Locations	Figure 8-82
Circuit Descriptions	Precedes Figure 8-82
A26 3 MHz Filter Assembly	
Schematic	Figure 8-86
Component Locations	Figure 8-85
Circuit Descriptions	Precedes Figure 8-85
A27 Bandwidth Filter No. 1 Assembly	
Schematic	Figure 8-75
Component Locations	Figure 8-74
Circuit Descriptions	Precedes Figure 8-74
A28 Variable Gain Assembly	
Schematic	Figure 8-89
Component Locations	Figure 8-88
Circuit Descriptions	Precedes Figure 8-88

Table 8-1. Service Information Index (4 of 4)

Subject	Location
A29 RF-IF Motherboard Assembly Schematic Component Locations	 Figure 8-91 Figure 8-90
A30 First Mixer Assembly A31 YIG-Tuned Oscillator Assembly A32 YIG-Tuned Filter Assembly A33 Limiter A34 RF Attenuator Assembly Schematic Circuit Descriptions	 Figure 8-95 Precedes Figure 8-95
A35 Second Converter Assembly Schematic Component Locations Circuit Descriptions	 Figure 8-97 Figure 8-96 Precedes Figure 8-96
A36 Tuning Stabililzer Assembly Schematic Discriminator Assembly Component Locations VCXO Assembly Component Locations Circuit Descriptions	 Figure 8-103 Figure 8-101 Figure 8-102 Precedes Figure 8-101
A37 Third Converter Assembly Schematic Component Locations Circuit Descriptions	 Figure 8-107 Figure 8-106 Precedes Figure 8-106
A40 Power Supply Assembly Schematic Rectifier Assembly Component Locations Regulator Assembly Component Locations Circuit Descriptions	 Figure 8-111 Figure 8-109 Figure 8-110 Precedes Figure 8-109
A41 Line Module and Cable Assembly Schematic	 Figure 8-111
A42 Comb Generator Assembly (Option 001) Schematic Component Locations Circuit Descriptions	 Figure 8-113 Figure 8-112 Precedes Figure 8-112
A43 HP-IB Connector Assembly Schematic Component Locations Circuit Descriptions	 Figure 8-116 Figure 8-115 Precedes Figure 8-115

GRAPHIC SYMBOLS USED ON SCHEMATIC AND BLOCK DIAGRAMS

R, L, C	Resistance is in ohms, inductance is in microhenries, capacitance is in microfarads, unless otherwise noted.
P/O	Part of
	Circuit assembly borderline
	Heavy line surrounds functional block diagram within circuit assembly.
	Heavy line with arrows indicates path and direction of main signal.
	Heavy dashed line with arrows indicates path and direction of main feedback.
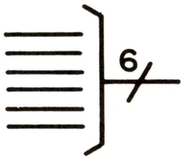	Digital lines are transmitted via a bus line to individual destinations.
	Single pin of a PC board edge connector
	Soldered or mechanical connection
	Soldered jumper wire

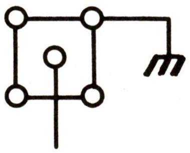	SMC connector jack
	Plug-in connection
	Connection symbol indicates a Jack (except for PC board edge connectors).
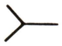	Connection symbol indicates a Plug (except for PC board edge connectors).
	Assembly ground
	Chassis ground
	Earth ground
*	Asterisk denotes a factory-selected value. Value shown is typical.
	Shielded conductor for cables
	Screwdriver adjustment
	Front-panel control

Figure 8-1. Graphic Symbols Used on Schematic and Block Diagrams (1 of 3)

GRAPHIC SYMBOLS USED ON SCHEMATIC AND BLOCK DIAGRAMS (Cont'd)

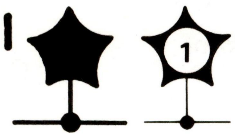

Test point: Terminal provided for test probe.

Measurement point: Used to indicate a convenient point for measurement. No terminal provided for test probe.

Indicates "WARNING: HAZARDOUS VOLTAGE."

Indicates wire or cable color code. Color code same as resistor color code. First number indicates base color, second and third numbers indicate colored stripes.

Variable resistor: CW indicates clockwise rotation of shaft moves wiper towards location of CW.

Thermistor

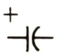

Electrolytic capacitor

Feedthrough capacitor

Ferrite bead (prevents high frequency parasitic oscillations)

General purpose diode

Breakdown diode: Zener

Schottky diode

Varactor diode (Varicap)

Light-emitting diode

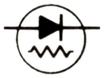
PIN diode

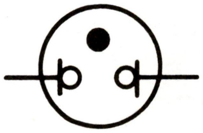
Neon voltage regulator

MOS-FET, N-Channel

MOS-FET, P-Channel

Figure 8-1. Graphic Symbols Used on Schematic and Block Diagrams (2 of 3)

GRAPHIC SYMBOLS USED ON SCHEMATIC AND BLOCK DIAGRAMS (Cont'd)

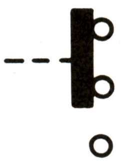
Slide switch

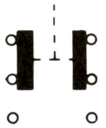
Pushbutton switch

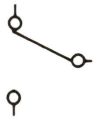
Toggle or rocker switch

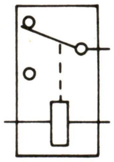
Relay

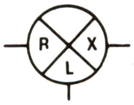

Mixer

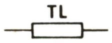

Transmission line

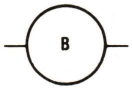

Fan, motor

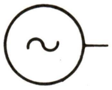
Oscillator

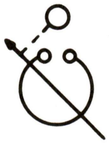
Tunable cavity

Crystal-controlled oscillator

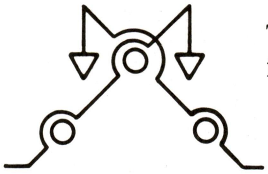
Three-pole, YIG-tuned filter.

Isolator (circulator type)

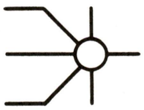
Isolated common connection

Figure 8-1. Graphic Symbols Used on Schematic and Block Diagrams (3 of 3)

SCHEMATIC SYMBOLS FOR DIGITAL INTEGRATED CIRCUITS

The following is a guide to the symbols used for digital or logic ICs in this manual. The symbology is based upon American National Standard ANSI Y32.14, *Graphic Symbols for Logic Diagrams (Two-State Devices),* but does not strictly follow the standard. This figure should be consulted for the explanation of digital IC symbols used in Section VIII.

DEFINITIONS

Logic Element: The part or parts of a logic device symbol having a well-defined logic function (OR, AND, FLIP-FLOP, etc.) and one or more outputs. The inputs of a logic element may be data, address, or control inputs; the outputs are data outputs.

Control Block: The part of a logic device symbol to which all logic lines common to a group of logic elements are connected. Lines connected to a control block are control lines.

Function Label: The notation within a logic device symbol that denotes its overall logic function (counter, shift register, multiplexer, etc.).

Line Label: The symbol or abbreviation associated with an output or input line that defines the action of the line.

Indicator Symbol: A symbol associated with an input or output line which defines the active state or special characteristics of the line.

Figure 8-2. Schematic Symbols for Digital Integrated Circuits and Signature Analysis Troubleshooting Instructions (1 of 14)

SCHEMATIC SYMBOLS FOR DIGITAL INTEGRATED CIRCUITS (Cont'd)

BASIC LOGIC SYMBOLS

Distinctive-Shape Symbols

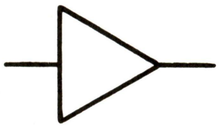

AMPLIFIER/BUFFER — Output is active when input is active.

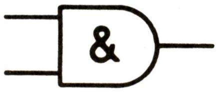

AND FUNCTION — Output is active only when all inputs are active.

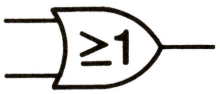

OR FUNCTION — Output is active when one or more inputs are active.

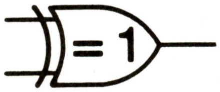

EXCLUSIVE-OR FUNCTION — Output is active when only one input is active.

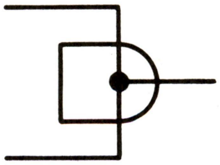

WIRED AND FUNCTION — Two or more elements are joined together to achieve the effect of an AND function.

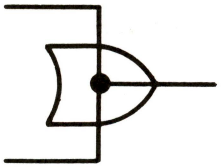

WIRED OR FUNCTION — Two or more elements are joined together to achieve the effect of an OR function.

Figure 8-2. Schematic Symbols for Digital Integrated Circuits and Signature Analysis Troubleshooting Instructions (2 of 14)

SCHEMATIC SYMBOLS FOR DIGITAL INTEGRATED CIRCUITS (Cont'd)

BASIC LOGIC SYMBOLS (Cont'd)

Rectangular Symbols

General Logic Element

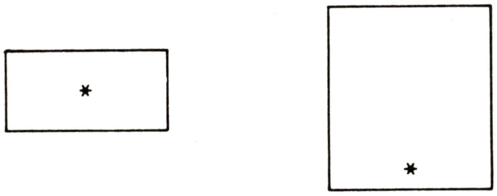

Control Block

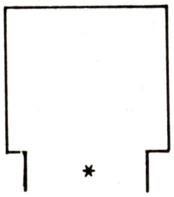

Logic Elements with Common Control Block

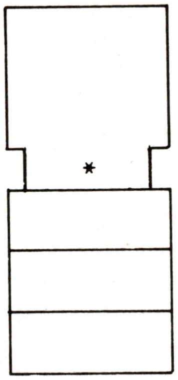

NOTE

If elements sharing control lines are widely separated, each element has a separate control block.

*Asterisk indicates function label placement.

Figure 8-2. Schematic Symbols for Digital Integrated Circuits and Signature Analysis Troubleshooting Instructions (3 of 14)

SCHEMATIC SYMBOLS FOR DIGITAL INTEGRATED CIRCUITS (Cont'd)

BASIC LOGIC SYMBOLS (Cont'd)

Indicator Symbols (positive logic assumed) (Cont'd)

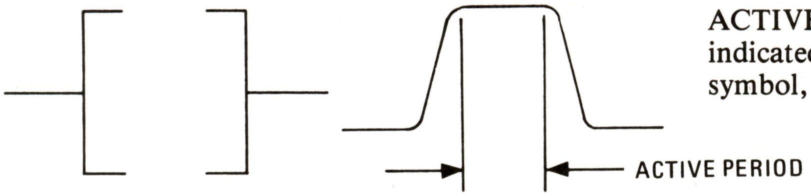

ACTIVE-HIGH inputs and outputs are indicated by the absence of the negation symbol, O.

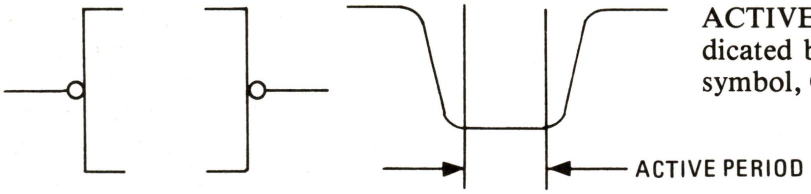

ACTIVE-LOW inputs and oututs are indicated by the presence of the negation symbol, O.

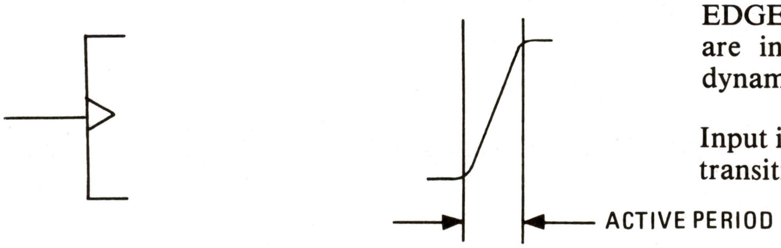

EDGE-TRIGGERED (dynamic) inputs are indicated by the presence of the dynamic input symbol.

Input is active only on the positive-going transition.

Figure 8-2. Schematic Symbols for Digital Integrated Circuits and Signature Analysis Troubleshooting Instructions (4 of 14)

SCHEMATIC SYMBOLS FOR DIGITAL INTEGRATED CIRCUITS (Cont'd)

BASIC LOGIC SYMBOLS (Cont'd)

Indicator Symbols (positive logic assumed) (Cont'd)

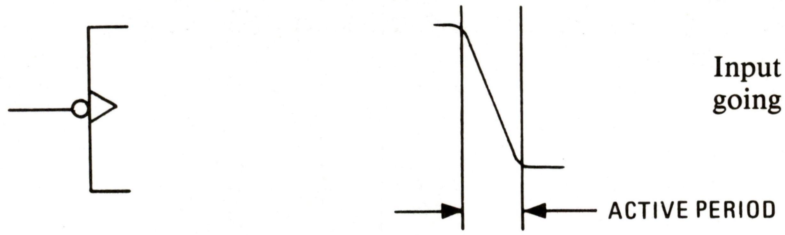

Input is active only on the negative-going transition.

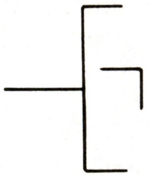

TRAILING-EDGE ACTIVATED outputs are indicated by the output delay symbol, ┐ . These outputs remain active when the signal that initiates the change returns to its original state (example: the outputs of a J-K masterslave flip-flop).

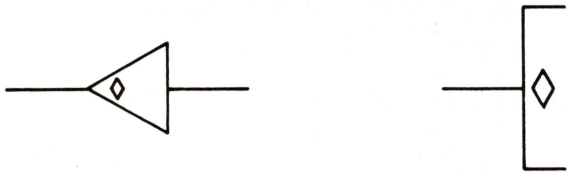

OPEN-COLLECTOR outputs are indicated by the open-collector symbol, ◊ .

Figure 8-2. Schematic Symbols for Digital Integrated Circuits and Signature Analysis Troubleshooting Instructions (5 of 14)

SCHEMATIC SYMBOLS FOR DIGITAL INTEGRATED CIRCUITS (Cont'd)

NOTE

The logic negation symbol (O) alone gives no information about the actual voltage levels used in a digital circuit. For this reason the type of logic system (positive or negative) must be specified. In this manual, unless otherwise noted on the schematic, the logic system is positive; that is, the more positive voltage level is the HIGH or 1-state and the less positive level is the LOW or 0-state.

FUNCTION LABELS

Σ	ADDER
▷	AMPLIFIER/BUFFER
1 ⎍	MONOSTABLE MULTIVIBRATOR (ONE-SHOT)
&	AND FUNCTION
≥1	OR FUNCTION
=1	EXCLUSIVE-OR FUNCTION
◄—►	BILATERAL SWITCH-A binary-controlled circuit which acts as on/off switch to analog or binary signals flowing in both directions.
X—►Y	CODER-Input code (X) is converted to output code (Y) per weighted values.
XMAX—►Y	PRIORITY CODER-Output code corresponds to maximum coefficient assignment of any active input.
⎎	SCHMITT TRIGGER-This symbol indicates that hysteresis exists in the device.
ADC	ANALOG-TO-DIGITAL CONVERTER
ALU	ARITHMETIC AND LOGIC UNIT
CNTR	COUNTER
CPU	CENTRAL PROCESSING UNIT

Figure 8-2. Schematic Symbols for Digital Integrated Circuits and Signature Analysis Troubleshooting Instructions (6 of 14)

SCHEMATIC SYMBOLS FOR DIGITAL INTEGRATED CIRCUITS (Cont'd)

FUNCTION LABELS (Cont'd)

DAC	DIGITAL-TO-ANALOG CONVERTER
DCDR	ENCODER, DECODER
DEMUX	DEMULTIPLEXER
FF	FLIP-FLOP
MPU	MICROPROCESSOR UNIT
MUX	MULTIPLEXER
RAM	RANDOM-ACCESS (READ-WRITE) MEMORY
REG	REGISTER
ROM	READ-ONLY MEMORY
SAREG	SUCCESSIVE APPROXIMATION REGISTER
SREG	SHIFT REGISTER

LINE LABELS

(,) Comma	AND FUNCTION
(/) Slant	OR FUNCTION
←	SHIFT LEFT (OR UP)
→	SHIFT RIGHT (OR DOWN)
+1	COUNT UP
−1	COUNT DOWN
=0, −1	BORROW OUTPUT
=9, +1	CARRY OUTPUT (DECIMAL COUNTER)
=15, +1	CARRY OUTPUT (BINARY COUNTER)

Figure 8-2. Schematic Symbols for Digital Integrated Circuits and Signature Analysis Troubleshooting Instructions (7 of 14)

SCHEMATIC SYMBOLS FOR DIGITAL INTEGRATED CIRCUITS (Cont'd)

LINE LABELS (Cont'd)

An	nTH ADDRESS BIT (ROM, RAM)
C	CLOCK INPUT (D-TYPE FLIP-FLOP ONLY)
CONT	CONTROL INPUT
D	DATA OR DELAY INPUT (FLIP-FLOP)
Dn	nTH DATA BIT INPUT
EN	ENABLE
F	3-STATE ENABLE INPUT (SEE "DEPENDENCY")
G	GATING INPUT (SEE "DEPENDENCY")
J	J-K FLIP-FLOP J INPUT
K	J-K FLIP-FLOP K INPUT
LD	LOAD ENABLE INPUT (SYNCHRONOUS)
PS	PRESET INPUT (ASYNCHRONOUS)
R	RESET OR CLEAR INPUT
RD	READ ENABLE INPUT (RAM, ROM)
RNG	RANGE INPUT
S	SET INPUT
SEL	LINE OR FUNCTION SELECT INPUT
SER	SERIAL DATA INPUT (SHIFT REGISTER)
T	TRIGGER INPUT (MONOSTABLE)
WR	WRITE ENABLE INPUT (RAM)
Yn	nTH DATA BIT OUTPUT OR I/O
3-ST (placed by function label)	3-STATE (used with F notation to symbolize devices that have an output disconnect ability)

Figure 8-2. Schematic Symbols for Digital Integrated Circuits and Signature Analysis Troubleshooting Instructions (8 of 14)

SCHEMATIC SYMBOLS FOR DIGITAL INTEGRATED CIRCUITS (Cont'd)

DEPENDENCY NOTATION

Dependency notation is the technique for defining input/output and input/input relationships without showing all the elements and interconnections involved.

The two ways to represent a dependency are: (1) by suffix, and (2) by prefix.

Suffix form:	D1 or D_1	The suffix "1" indicates a logic connection between the input D and a control line with the same numeral. The suffix may be shown as a subscript.
Prefix form:	1D	The prefix "1" indicates a logic connection between the input D and a control line with the same numeral.

The type of logic relationship is further clarified by the use of the appropriate dependency notation: G, C, F, or A.

The following illustrations provide examples of dependency notation.

Gm The G input gates those inputs or outputs labeled with the same identifier m. The m is replaced with a number.

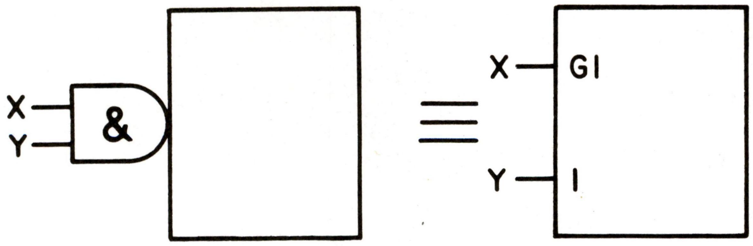

The AND relationship between X and Y is indicated by the AND gate symbol drawn in the figure on the left. In the figure on the right, the need for the AND gate symbol is eliminated by the use of the dependency notation G. "G1" is the input that gates all other inputs labeled with the same indentifying numeral "1."

Figure 8-2. Schematic Symbols for Digital Integrated Circuits and Signature Analysis Troubleshooting Instructions (9 of 14)

SCHEMATIC SYMBOLS FOR DIGITAL INTEGRATED CIRCUITS (Cont'd)

DEPENDENCY NOTATION (Cont'd)

Cm Control Dependency-This is used only with D-type flip-flops and indicates that the basic function of the flip-flop is controlled by inputs with the same identifier. The m is replaced with a number.

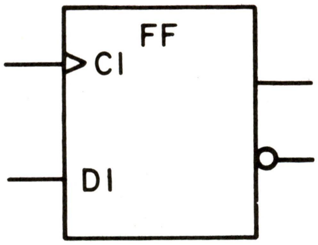

The data input to the D flip-flop is controlled by a clock signal applied to the control input (C). The data input identifier (D) is suffixed with a "1" to indicate the dependency relationship between the two inputs. In most cases, the D flip-flop is enabled by a control signal "C." The " ⊳ " symbol on the "C" input indicates that the D flip-flop is enabled on the positive-going edge of the signal. In a more complex device, there may be more than one control input (e.g., C2, D_2)

Fm Free Dependency-This is an input that acts as a disconnect switch. The m is replaced with a number. Free dependency is usually used with bus lines in 3-state logic.

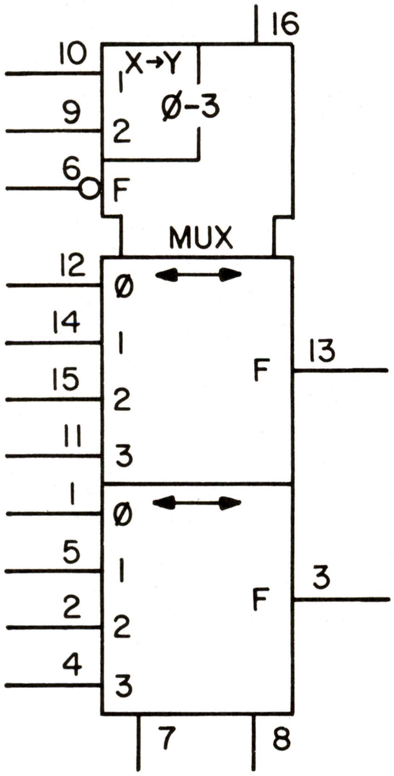

"F" is the free dependency notation. When "F" is enabled (pin 6 low), outputs labeled "F" go to a high-impedance state. If "F" input is not enabled (pin 6 high), multiplexer will output data.

Figure 8-2. Schematic Symbols for Digital Integrated Circuits and Signature Analysis Troubleshooting Instructions (10 of 14)

SCHEMATIC SYMBOLS FOR DIGITAL INTEGRATED CIRCUITS (Cont'd)

DEPENDENCY NOTATION (Cont'd)

Am The m suffix should be replaced with a number indicating the number of locations that can be addressed.

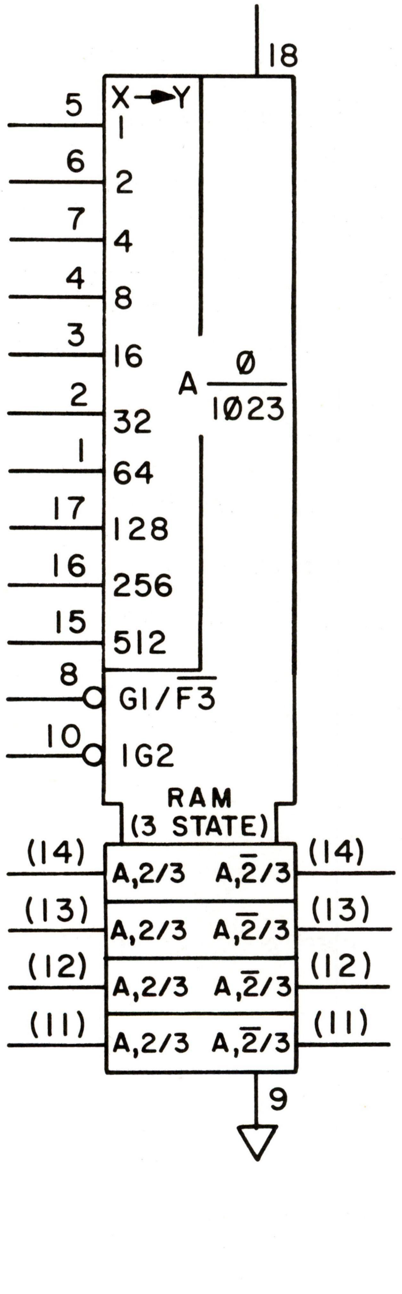

This symbol for Random-Access Memory (RAM) has a ten-bit address, a four-bit input, and a four-bit output.

Inputs and outputs use the same pins as indicated by pin numbers enclosed in parentheses.

Address lines are weighted to correspond to the memory locations that can be accessed (AØ/1Ø23).

Pin 8 is the device enable. Only when G1 is enabled (a low at pin 8) will memory be accessed. The "1" preceding G2 at pin 10 indicates that G2 is dependent on G1. F3 is the free dependency notation. When F3 is enabled (a high at pin 8), input/output pins go to a high-impedance state and data cannot be accessed.

Outputs are labeled "A,$\overline{2}$/3". The "A" indicates the data output (read function) is dependent upon the memory location addressed. The "$\overline{2}$/3" indicates the dependency of the output upon either the G2 enable (a high at pin 10) or F3 enable (a high at pin 8).

Inputs operate identically to outputs except that a low at pin 10 is required for memory access (write function).

Figure 8-2. Schematic Symbols for Digital Integrated Circuits and Signature Analysis Troubleshooting Instructions (11 of 14)

SCHEMATIC SYMBOLS FOR DIGITAL INTEGRATED CIRCUITS (Cont'd)

DEPENDENCY NOTATION (Cont'd)

Dependency can also be indicated with logic elements appearing at inputs to control blocks. These input lines enable either the outputs or inputs of "dependent" logic elements.

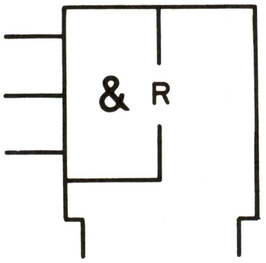

Two inputs are ANDed to enable a reset.

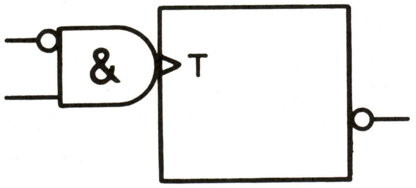

Two inputs are ANDed to enable a trigger.

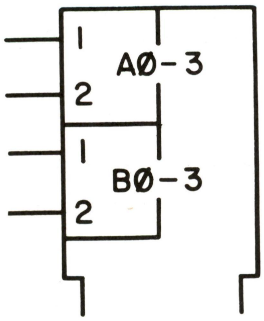

Combinations of inputs enable corresponding outputs Ø − 3.

Figure 8-2. Schematic Symbols for Digital Integrated Circuits and Signature Analysis Troubleshooting Instructions (12 of 14)

SCHEMATIC SYMBOLS FOR DIGITAL INTEGRATED CIRCUITS (Cont'd)

DEPENDENCY NOTATION (Cont'd)

WEIGHT OF INPUT AND OUTPUT LINE

Weight is the decimal equivalent of the binary value assigned to a digital line.

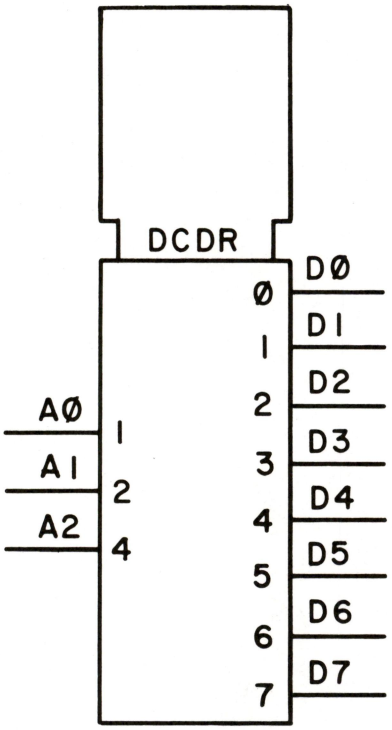

In this binary-to-decimal decoder, the weight of A1 is 2 or 2^1; A2 is 4 or 2^2. If AØ and A2 are active, the total weight of the input is $5(2^0+2^2)$, which produces an output at D5.

Figure 8-2. Schematic Symbols for Digital Integrated Circuits and Signature Analysis Troubleshooting Instructions (13 of 14)

Use of Signature Analysis Troubleshooting Diagrams

1. Connect signature analyzer and set controls according to diagram instructions.

2. Set up test configuration as indicated (connect and/or remove special test jumpers, etc.).

3. Verify the +5 Vdc signature for the test being performed, as indicated in green lettering on main verification path (green line). This signature can be verified by probing the +5 Vdc supply or by pushing and releasing the reset key on the signature analyzer probe. If +5 Vdc signature is incorrect, first check equipment settings and connection. Then check for activity at CLOCK, START, and STOP connections using signature analyzer probe. If no activity, refer to appropriate schematic for troubleshooting.

4. Begin probing the printed circuit board at the beginning of the green line on the diagram (A).

5. Probe every point indicated by the green line.

6. If signature at node is incorrect, node is suspect. Information printed in red on the troubleshooting diagram is helpful for tracing problem to its source; location instructions (B) indicate the next closest pin connected to the circuit node. For example, instruction "24-5" indicates that a circuit node signature originates at U24, pin 5. (Note that pin 1 on each IC is square.)

   Interconnecting red lines show related input and output pins. Red lines (C) connect inputs that affect only the outputs to which they are connected.

   Interconnecting black lines (D) represent a physical connection between IC pins.

7. To locate the faulty source node, use the troubleshooting diagram and circuit schematics to check signatures.

8. Verify signatures to all IC pins connected to a suspect node. If all signatures for a circuit node are not identical, the printed circuit board, connectors, and solder joints should be checked for faults. After locating faulty node, proceed with conventional troubleshooting. Use the HP 546A Logic Pulser and HP 547A Current Tracer.

9. Before replacing any suspected defective component, follow instructions printed in red on the troubleshooting diagram. These troubleshooting instructions are usually referenced by an asterisk (*).

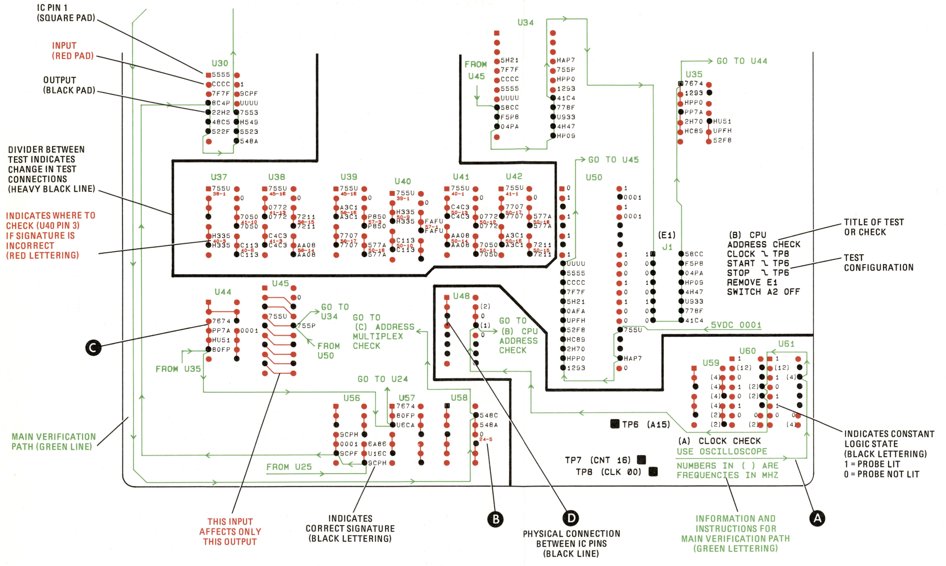

Figure 8-2. Schematic Symbols for Digital Integrated Circuits and Signature Analysis Troubleshooting Instructions (14 of 14)

8-11. REPAIR

8-12. After-Service Product Safety Checks.

Visually inspect the interior of the instrument for any signs of abnormal, internally generated heat such as discolored printed circuit boards or components, damaged insulation, or evidence of arcing. Find and remedy the cause of any such condition.

8-13. Using a suitable ohmmeter, check the resistance from the instrument enclosure to the ground pin on the power cord plug. The reading must be less than one ohm. Flex the power cord while making this measurement to check for intermittent opens.

8-14. Check resistance from the instrument enclosure to line and neutral (tied together) with the line switch ON and the power source disconnected. The minimum acceptable resistance is two megohms.

8-15. Check the line fuse to verify that a correctly rated fuse is installed.

8-16. Removal of A1 Front Panel Display Assembly

1. Pry up and remove top trim strip from front frame.
2. Remove trim strip from left side of front frame (standard) or from left handle (Option 907).
3. If instrument is Option 907, remove left handle.
4. Remove two screws from left side of front frame.

NOTE

In the following step, do not remove the two small screws in the top of the front panel frame.

5. Remove one screw (close to center on Front Panel Display Assembly side) from top and one screw (close to center on Front Panel Display Assembly side) from bottom of front frame.
6. Carefully remove Front Panel Display Assembly and disconnect three ribbon cables. (A special tool, HP Part Number 8710-0580, for ease of disconnecting ribbon cable connectors, is contained in HP 8569B Service Accessories Package, HP Part Number 08569-60035.

8-17. Remove of A2 Front Panel Control Assembly

1. Pry up and remove top trim strip from front frame.
2. Remove two screws from top of front frame (Front Panel Control Assembly side).

NOTE

In the following step, do not remove the two screws nearest the right-hand side of the instrument in the bottom of the front frame.

3. Remove two screws closest to center screw on bottom of front frame (control assembly side).
4. Carefully remove A2 Front Panel Control Assembly and disconnect the three ribbon cables. (A special tool, HP Part Number 8710-0580, for ease of disconnecting ribbon cable connectors, is contained in the HP 8569B Service Accessories Package, HP Part Number 08569-60035.) The cable between A2A3 Tuning Assembly and A29 RF-IF Motherboard must also be disconnected.

8-18. Disassembly of A2 Front Panel Control Assembly Rotary Switches

8-19. Removal of Front Dress Panel and Sub-Front Panel

1. Remove A2 Front Panel Control Assembly.
2. Remove following front-panel knobs: TUNING (FINE and coarse), RESOLUTION BW, FREQUENCY SPAN/DIV, MANUAL SWEEP, TRIGGER LEVEL, SWEEP TIME/DIV, PRESELECTOR PEAK, and REF LEVEL FINE.
3. Remove REFERENCE LEVEL knob. First remove retaining ring from shaft, then black index disc, then REFERENCE LEVEL knob.
4. Remove 3/8-inch nut and lockwasher from SWEEP TIME/DIV control.
5. Remove two 1/2-inch nuts (FREQUENCY SPAN/DIV and REFERENCE LEVEL controls). Remove INPUT ATTEN pointer. Remove front dress panel.

6. Remove ten 4-40 screws (A2MP143 through A2MP152) from rear side of A2A1 Front Switch Assembly. Remove one long 4-40 screw (A2MP92) and spacer (A2MP105) from A2A4 Rear Switch Assembly (see Figure 8-3).

WARNING

If an attempt is made to repair the clutch mechanism of A2A3 Tuning Assembly, HP Part Number 08565-60006, use extreme care. The ball bearings are under spring tension and could cause serious injury if they were suddenly released during the clutch mechanism disassembly.

7. Remove switch assemblies from sub-front panel, carefully maneuvering PC boards to clear A2A3 Tuning Assembly. (Remove Tuning Assembly, if necessary, by removing four 4-40 screws from bottom plate of Tuning Assembly.)

8. Unsolder the five wires from A2A5 Reference Level Encoder Assembly.

8-20. Disassembly of RESOLUTION BW Switch (Figure 8-3)

1. Remove A2 Front Panel Control Assembly.
2. Remove Front Dress Panel and Sub-Front Panel.
3. Remove two 4-40 nuts and lockwashers from top portion of A2A4 Rear Switch Assembly.
4. Remove Rear Switch Assembly; remove two spacers from screws.
5. Remove bandwidth rotor (A2MP91).
6. Remove resolution bandwidth shaft (A2MP85) by removing retaining ring and spacer washers, if any, at front of resolution bandwidth shaft. Slide shaft, with brass drive hub (A2MP75) attached, toward rear of switch assembly.

NOTE

The brass drive hub on the resolution bandwidth shaft is preset against the collar on the shaft (see Figure 8-4b). Do not remove the drive hub unless the drive hub or the resolution bandwidth shaft has been damaged.

8-21. Disassembly of FREQUENCY SPAN/DIV Switch (Figure 8-5)

1. Remove A2 Front Panel Control Assembly.
2. Remove Front Dress Panel and Sub-Front Panel.
3. Disassembly RESOLUTION BW switch.
4. Remove bandwidth detent (A2MP82).
5. Remove four 4-40 nuts from rear of A2A1 Front Switch Assembly, holding FREQUENCY SPAN/DIV switch against front of Front Switch Assembly.
6. Remove two long 4-40 screws, two spacers, and frequency span detent (A2MP83) with brass bushing (A2MP88) attached.
7. Loosen set screws in brass coupling hub (A2MP72) on rear side of Front Switch Assembly and remove coupling hub from frequency span shaft (A2MP210).
8. Remove frequency span shaft with frequency span rotor (A2MP84), slotted bushing (A2MP79), brass drive hub (A2MP73), and torsion spring (A2MP118) attached.
9. Remove torsion spring from contact side of frequency span rotor and slide frequency span rotor with slotted bushing off end of frequency span shaft.

NOTE

The brass drive hub on the frequency span shaft is preset at 15.200 mm (0.600 inch) from the end of the shaft (see Figure 8-4e). Do not remove the brass drive hub unless the drive hub or the frequency span shaft has been damaged.

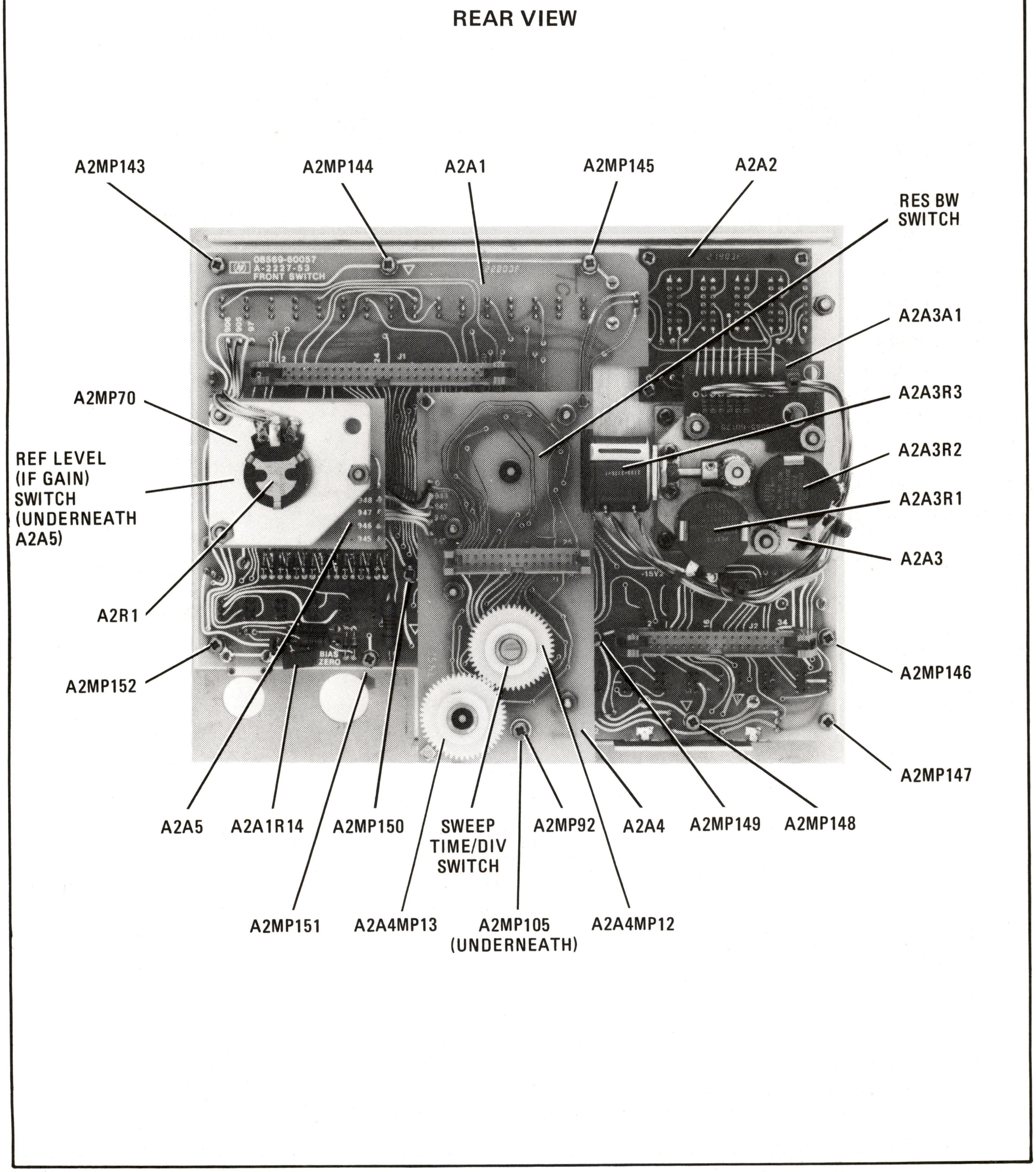

Figure 8-3. A2 Front Panel Control Assembly, Rear View

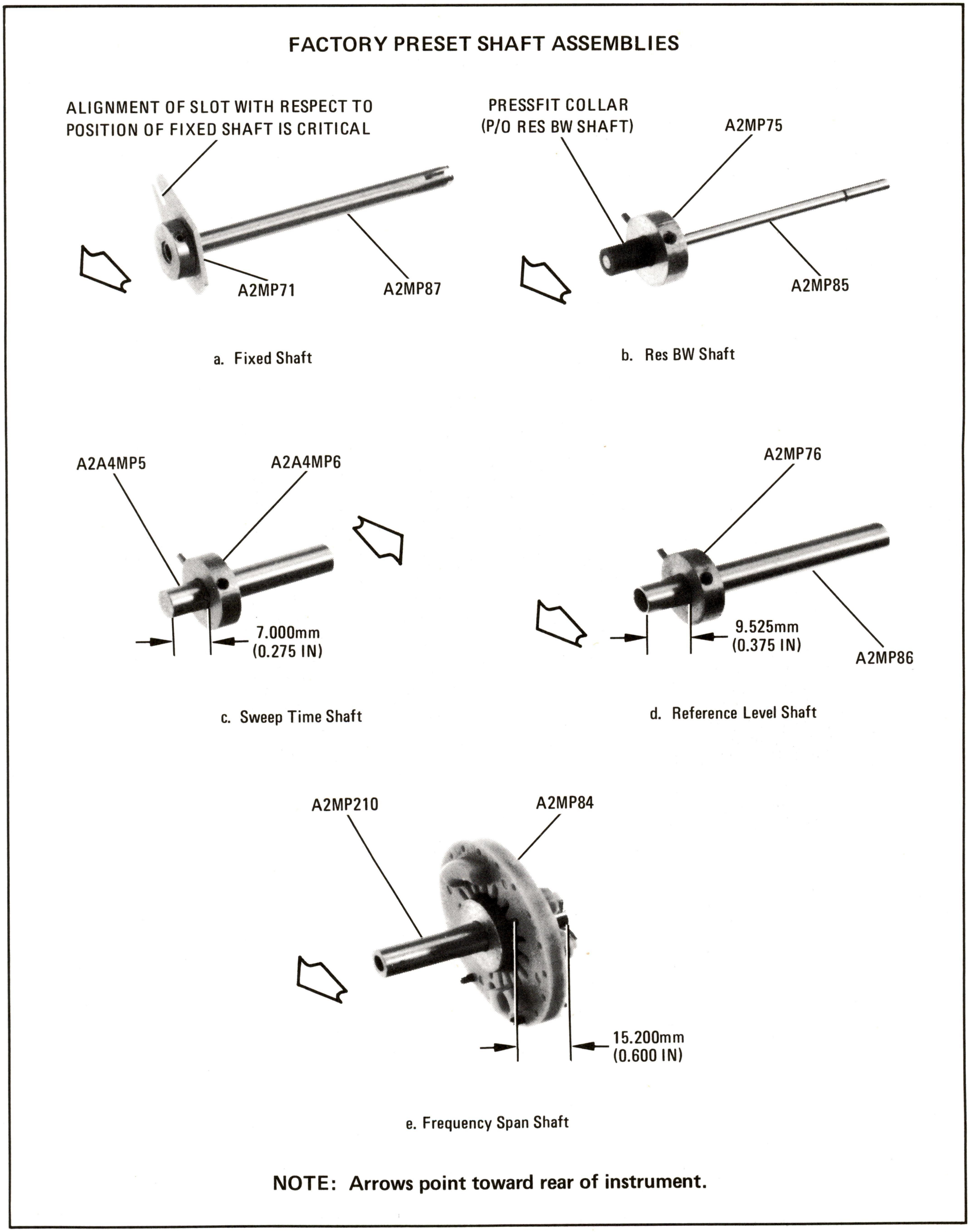

Figure 8-4. Factory Preset Shaft Assemblies

FRONT VIEW

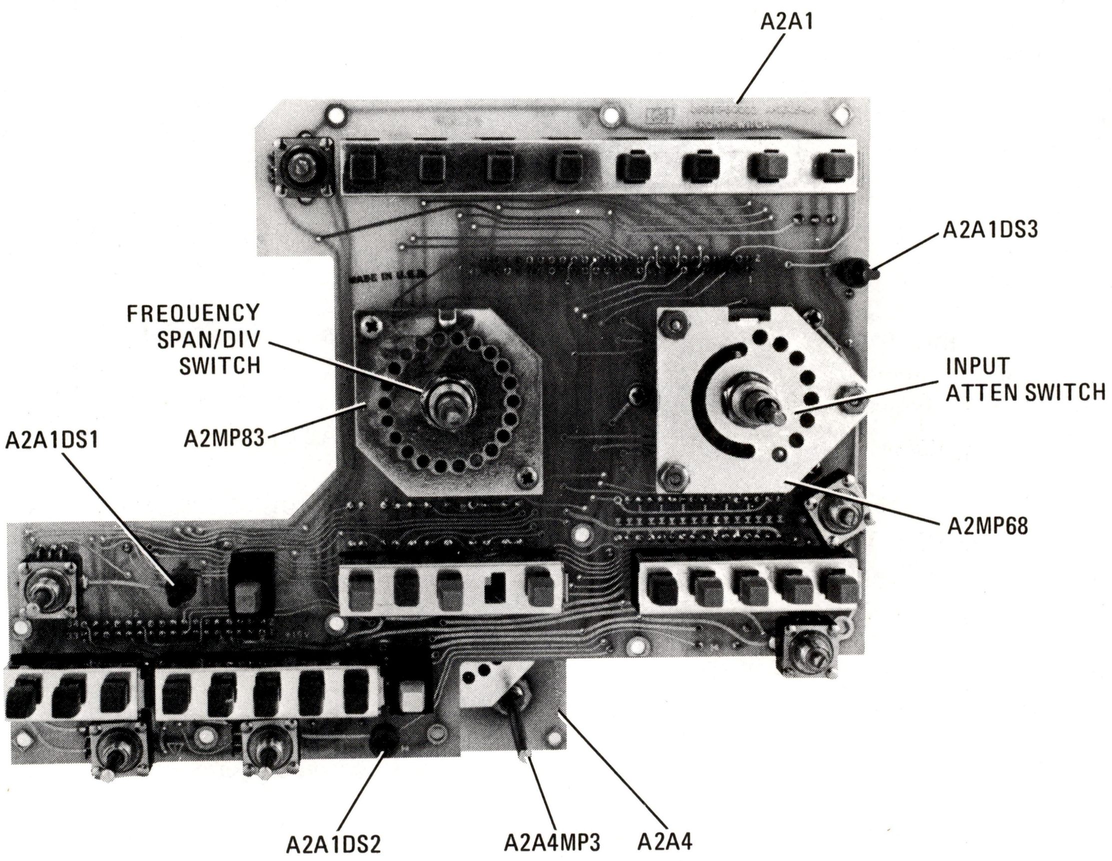

Figure 8-5. Switch Assemblies, Front View

8-22. Disassembly of REF LEVEL Switch (Figure 8-3)

1. Remove A2 Front Panel Control Assembly.

2. Remove Front Dress Panel and Sub-Front Panel.

3. Remove three 4-40 nuts and lockwashers from level pot plate (A2MP70 . There are four set screws in Reference Level Encoder Assembly rotary switch hub (A2A5MP2). Loosen two set screws closest to Front Switch Assembly PC board. Slide REF LEVEL FINE shaft (A2MP68) out toward front of Front Switch Assembly.

4. Remove level pot plate (A2MP70), REF LEVEL FINE pot (A2R1), and Reference Level Encoder Assembly (A2A5) together. Remove three short spacers (A2MP92 through A2MP94) from between level pot plate and Reference Level Encoder Assembly.

5. Unsolder three REF LEVEL FINE pot leads from Front Switch Assembly PC board.

6. Remove three long spacers (A2MP106) from long screws. Remove fixed shaft (A2MP87) with slotted crank (A2MP71) attached.

NOTE

The slotted crank on the fixed shaft is preset for proper alignment (see Figure 8-4a). Do not remove the slotted crank unless it or the fixed shaft has been damaged.

7. Loosen set screws in rotating lockout (A2MP77) and remove rotating lockout.

8. Remove three 4-40 nuts and lockwashers holding IF gain detent (A2MP69). Remove three long screws (A2MP97 through A2MP99) and spacers. Remove conical compression spring (A2MP113).

9. Remove ball bearing and small spring from double-contact (reference level) rotor (A2MP81).

NOTE

The rear brass drive hub (A2MP76) on the reference level shaft (A2MP86) is preset at 9.525 mm (0.375 inch) from the end of the shaft (see Figure 8-4d). Do not remove the rear brass drive hub unless the drive hub or the reference level shaft has been damaged.

10. Press reference level shaft from rear side of switch assembly and loosen set screws in front brass drive hub (A2MP74) on front side of Front Switch Assembly.

11. Remove reference level shaft with rear brass drive hub attached. Remove rotor.

8-23. Disassembly of INPUT ATTEN Switch (Figure 8-5)

1. Remove A2 Front Panel Control Assembly.

2. Remove Front Dress Panel and Sub-Front Panel.

3. Remove three 4-40 nuts, lockwashers, spacers, and screws holding attenuator detent (A2MP68). Remove attenuator detent.

4. If REF LEVEL switch has not been disassembled, loosen set screws in front brass drive hub (A2MP74).

5. Remove double-contact (attenuator) rotor (A2MP80). Remove ball bearing and small spring from rotor.

8-24. Disassembly of SWEEP TIME/DIV Switch (Figure 8-3)

1. Remove A2 Front Panel Control Assembly.

2. Remove Front Dress Panel and Sub-Front Panel.

3. Loosen set screws in 48-tooth spur gear (A2A4MP12) closest to center on rear side of A2A4 Rear Switch Assembly. Remove 48-tooth spur gear and flat washer.

4. Remove two 4-40 nuts and lockwashers from rear side of A2A4 Rear Switch Assembly.

5. Remove two 4-40 screws, spacers, and sweep time detent (A2A4MP1). Remove ball bearing and small spring from sweep time rotor (A2A4MP4).

6. Remove sweep time rotor and sweep time shaft (A2A4MP5) with brass drive hub (A2A4MP6) attached.

NOTE

The brass drive hub on the sweep time shaft is preset at 7.000 mm (0.275 inch) from the end of the shaft (see Figure 8-4c). Do not remove the brass drive hub unless the drive hub or the sweep time shaft has been damaged.

8-25. Assembly of SWEEP TIME/DIV Switch

1. Place sweep time rotor (A2A4MP4), with contact fingers down, on front side of A2A4 Rear Switch Assembly. The sweep time rotor is a double-contact rotor with no stop pins.

2. Place black sweep time shaft (A2A4MP5) with preset brass drive hub (A2A4MP6) in sweep time rotor with pin (on brass drive hub) in one of 22 slots in rotor and with long end of sweep time shaft through sweep time rotor.

3. Place flat washer (A2A4MP27) over long end of sweep time shaft (rear side of A2A4 Rear Switch Assembly).

4. Place 48-tooth spur gear (A2A4MP12) on sweep time shaft (rear side of A2A4 Rear Switch Assembly). Be sure 48-tooth spur gear is as far down on sweep time shaft as it will go. Tighten set screw in 48-tooth spur gear.

CAUTION

Do not apply lubricant to the metal contact fingers on the rotor or to the contacts on the PC board.

5. Place small spring in hole in sweep time rotor and apply small amount of lubricant grease to small spring and rubbing part of sweep time rotor.

6. Place ball bearing on small spring in sweep time rotor.

7. Hold sweep time detent (A2A4MP1) with stop tab point downward. Sweep time detent has 22 detent holes and has short brass bushing (no threads showing) fastened to it. Place two 3/4-inch 4-40 screws through top side of sweep time detent.

8. Place one 1/2-inch spacer on each 3/4-inch screw and place sweep time detent over sweep time rotor.

9. Hold in place and fasten on rear side of A2A4 Rear Switch Assembly with small lockwashers and 4-40 nuts.

10. Check switch for mechanical ease of movement by rotating 48-tooth spur gear. This switch has no stop pins, so it should rotate freely through 360 degrees. Position sweep time rotor so contacts are positioned with 10 ms arrow on front side of A2A4 Rear Switch Assembly PC board.

8-26. Assembly of FREQUENCY SPAN/DIV and RESOLUTION BW Switches

1. Insert slotted bushing (A2MP79) into frequency span rotor (A2MP84) from contact finger side of rotor. Insert frequency span shaft (A2MP210) with brass drive hub (A2MP73) attached, short end through opposite side of frequency span rotor (side without contact fingers). Rotate frequency span shaft so pin (on brass drive hub) falls into one of 22 slots in frequency span rotor.

2. Align slotted bushing and slip hairpin-like torsion spring (A2MP118) through slots of slotted bushing from side of frequency span rotor with single raised pin. Place bent ends of torsion

spring between two raised pins on opposite side of frequency span rotor to secure torsion spring.

CAUTION

Do not apply lubricant to the metal contact fingers on the rotor or to the contacts on the PC board.

3. Place small spring in hole in frequency span rotor and apply small amount of lubricant grease to small spring and rubbing part of frequency span rotor.

4. Place ball bearing on small spring. Place frequency span detent (A2MP83) over frequency span shaft with stop tab pointing downward. The frequency span detent has 22 detent holes and has long brass bushing secured with two nuts. Position frequency span rotor so stop tab of frequency span detent does not fall within the small space between stop pins on the frequency span rotor.

5. Place 41 mm (1-5/8 inch) screws in holes of frequency span detent with screw heads on same side of frequency span detent as threaded part of brass bushing. Place 13 mm (1/2 inch) spacer on each screw.

6. Carefully place partially assembled FREQUENCY SPAN/DIV switch on A2A1 Front Switch Assembly PC board with frequency span detent positioned so stop tab is toward top of A2A1 PC board (see Figure 8-5). Secure FREQUENCY SPAN/DIV switch with two 4-40 nuts on each long screw (rear side of A2A1 Front Switch Assembly PC board). Do not use lock washers.

7. Rotate FREQUENCY SPAN/DIV switch to check for proper alignment. If switch is binding, loosen four 4-40 nuts on rear side of A2A1 Front Switch Assembly and realign as necessary.

8. Place bandwidth detent (A2MP82) over long screws with stop tab pointed outward and toward top of A2A1 Front Switch Assembly. The bandwidth detent has 22 detent holes and has a large (22 mm) center hole.

9. Place ball bearing in detent hole near bottom of bandwidth detent.

10. Place brass coupling hub (A2MP72) over frequency span shaft with pin pointing outward. Place black end of resolution bandwidth shaft (A2MP85), with preset brass drive hub (A2MP75) attached (see Figure 8-4b), through single-contact bandwidth rotor (A2MP91). Insert resolution bandwidth shaft from side opposite finger contact of bandwidth rotor, allowing pin in brass drive hub to fall into one of 22 slots in bandwidth rotor.

CAUTION

Do not apply lubricant to the metal contact fingers on the rotor or to the contacts on the PC board.

11. Place small spring in hole in bandwidth rotor and apply small amount of lubricant grease to small spring and rubbing part of bandwidth rotor.

12. Insert long part of resolution bandwidth shaft in frequency span shaft on A2A1 Front Switch Assembly, making sure that small spring in bandwidth rotor is directly over ball bearing on bandwidth detent.

13. Place 13 mm (1/2 inch) spacer on each long screw and place A2A4 Rear Switch Assembly over screws. Secure with lockwashers and 4-40 nuts. End of resolution bandwidth shaft must not bind against hole in A2A4 Rear Switch Assembly PC board.

14. Place small flat washer over front end of resolution bandwidth shaft and secure with small retaining ring.

15. Switch should be pushed in. Adjust brass coupling hub by holding switch assemblies front side up. Be sure brass coupling hub has dropped down as far as possible with pin (on brass coupling hub) in one of 22 slots in bandwidth rotor.

16. Tighten two set screws in brass coupling hub. Switch should rotate freely and push or pull freely in any position of switch.

8-27. Assembly of REF LEVEL and INPUT ATTEN Switches

CAUTION

Do not apply lubricant to the metal contact fingers on the rotor or to the contacts on the PC board.

1. Place small spring in hole in double-contact (attenuator) rotor (A2MP80) and apply small amount of lubricant grease to small spring and rubbing part of rotor. Rotor has a long pin protruding from side opposite contact fingers.

2. Place three 19 mm (3/4 inch) 4-40 screws through attenuator detent (A2MP68) with heads on same side of attenuator detent as threaded part of brass bushing. Attenuator detent has only eight detent holes and has long brass bushing secured with two nuts.

3. While holding three screws in place, hold attenuator detent with threaded portion of brass bushing facing downward. Place one 13 mm (1/2 inch) spacer on each of the three screws.

4. Place brass drive hub (A2MP74) on attenuator detent, making sure the pin (set off-center on side of brass drive hub) is toward bottom side, closest to attenuator detent. Place ball bearing on second or third hole from stop tab on attenuator detent.

5. Place double-contact (attenuator) rotor on top of brass drive hub with long pin pointed downward and small spring over ball bearing.

6. Place A2A1 Front Switch Assembly, front side down, over three screws with stop tab of attenuator detent toward top edge of A2A1 Front Switch Assembly PC board. Secure switch with three lockwashers and 4-40 nuts on rear side of A2A1 Front Switch Assembly.

7. Insert large, hollow reference level shaft (A2MP86), with preset brass drive hub (A2MP76) attached, through double-contact (reference level) rotor (A2MP81), long end first through slotted side of rotor. Pin in brass drive hub should fall into one of 22 slots in rotor.

8. Align brass drive hub and rotor using shaft of small pozi-drive screwdriver. Insert long part of reference level shaft through rear side of A2A1 Front Switch Assembly PC board, rotor, and brass drive hub so reference level shaft protrudes through front of switch assembly.

9. Place three 57 mm (2-1/4 inch) screws through front side of A2A1 Front Switch Assembly PC board. Place one 13 mm (1/2 inch) spacer on each of the three screws protruding through rear side of A2A1 Front Switch Assembly.

CAUTION

Do not apply lubricant to the metal contact fingers on the rotor or to the contacts on the PC board.

10. Place small spring in hole in double-contact (reference level) rotor and apply small amount of lubricant grease to small spring and rubbing part of rotor.

11. Place conical compression spring (A2MP113) on reference level shaft with small end of spring down (toward brass drive hub). Place ball bearing on small spring in rotor.

12. Place IF gain detent (A2MP69), with fixed lockout (A2MP78) attached, over three long screws with fixed lockout facing outward. Hold in position and secure with three 4-40 nuts. Do not use lockwashers. Make sure IF gain detent is properly aligned to allow free movement of reference level shaft before tightening the three 4-40 nuts.

13. Looking at INPUT ATTEN switch from front and top of A2A1 Front Switch Assembly, double-contact (attenuator) rotor should be positioned so its stop pin is on right side of stop tab of attenuator detent. Looking at REF LEVEL switch from rear side of A2A1 Front Switch Assembly, rotor should be positioned so its stop pin is on right side of stop tab of IF gain detent.

CAUTION

If the set screws in the knob are tightened too much, the hollow reference level shaft will collapse and be ruined.

14. Turn switch assembly front side down and make sure front brass drive hub is as close as it can be to brass bushing in attenuator detent. Temporarily tighten one set screw in front brass drive hub and turn switch assembly over (front side up). Keeping front brass drive hub as close as possible to brass bushing in attenuator detent, loosen set screw in front brass drive hub and position so drive hub pin is centered over second slot from long dowel pin in double-

contact (attenuator) rotor. Tighten both set screws in front brass drive hub.

15. Using one of large knobs (from front panel), turn switch shaft to test mechanical ease of movement over full range of each switch. Switch should move in and out freely with spring action and should rotate freely with control pushed in or not pushed in.

16. Place rotating lockout (A2MP77) over reference level shaft on rear side of A2A1 Front Switch Assembly with small pin on fixed lockout centered between teeth of rotating lockout. Tighten set screws in rotating lockout.

17. Place one 22 mm (7/8 inch) spacer on each long screw. Place fixed shaft (A2MP87), with slotted crank (A2MP71) attached to it, through hollow reference level shaft with slot of slotted crank slid over large pin on fixed lockout.

18. Place A2A5 Reference Level Encoder Assembly (rotor side toward A2A1 Front Switch Assembly) over three long screws. Place one 8 mm (5/16 inch) spacer on each long screw.

19. Set A2R1 REF LEVEL FINE potentiometer fully counterclockwise (using small knob from front panel controls, if necessary). Place level pot plate (A2MP70), with potentiometer A2R1 attached, over three long screws. Secure with three lockwashers and 4-40 nuts.

20. Set PC rotor assembly (A2A5MP1) so fingers contact encoder PC board at arrow labeled "o". Tighten two set screws closest to PC rotor assembly in rotary switch hub (A2A5MP2).

21. Insert reference level fine shaft (A2MP67) from front side of switch assembly as far as it will go. Tighten remaining two set screws in rotary switch hub. Solder three leads from REF LEVEL FINE potentiometer to A2A1 Front Switch Assembly PC board. (Color codes of wires are etched on PC board.)

8-28. Installation of Sub-Front Panel and Front Dress Panel

1. Place 1/4-28 bushing over sweep time control shaft (A2A4MP3) so threaded portion is toward front of switch assemblies. Place switch assemblies over sub-front panel and fasten A2A1 Front Switch Assembly to sub-front panel using ten 4.75 mm (3/16 inch) 4-40 pan head screws (A2MP143 through 152).

2. Place 19 mm (3/4 inch) spacer (A2MP105) between A2A1 Front Switch Assembly and A2A4 Rear Switch Assembly (see Figure 8-3). Place 25 mm (1 inch) 4-40 pan head screw (A2MP92) with lockwasher through A2A4 Rear Switch Assembly, spacer, and A2A1 Front Switch Assembly. Tighten screw.

3. Solder five wires from A2A4 Rear Switch Assembly to A2A5 Reference Level Encoder Assembly. (Color codes of wires are etched on PC board.)

4. Place front dress panel over control shafts, pushbuttons, and LEDs.

5. Place input attenuator pointer (A2MP9) over brass bushing on REFERENCE LEVEL control. Secure with 3/8-32 nut with collar. Align input attenuator pointer so collar of 3/8-32 nut slips down through pointer.

6. Place 3/8 inch lockwasher and 3/8-32 nut over brass bushing on FREQ SPAN/DIV control and tighten nut.

7. Place 1/4-28 bushing (on SWEEP TIME/DIV control shaft) through sub-front and front dress panels. Secure with 1/4 inch lockwasher and 1/4-28 nut.

8. Set sweep time rotor (A2A4MP4) by turning 48-tooth spur gear (A2A4MP13) until fingers contact PC board at arrow labeled "10 ms".

9. Place SWEEP TIME/DIV knob on SWEEP TIME/DIV control and tighten set screws with knob set to 10 mSEC.

10. Place coarse tuning knob on TUNING control and tighten set screws. Place FINE tuning knob on TUNING control, leaving a slight amount of space between coarse tuning knob and FINE tuning knob. Tighten set screws.

11. Place FREQUENCY SPAN/DIV knob on FREQUENCY SPAN/DIV control and tighten one set screw. Turn FREQUENCY SPAN/DIV control fully clockwise. Loosen set screw and set knob to indicate a FREQUENCY SPAN/DIV setting of "F" (full span). Tighten set screws.

12. Place RESOLUTION BW knob on RESOLUTION BW control, leaving a slight amount of space between FREQUENCY SPAN/DIV knob and RESOLUTION BW knob. Tighten one set screw and turn RESOLUTION BW control fully clockwise. Loosen set screw and set RESOLUTION BW knob so green OPTIMUM arrows are aligned. Tighten set screws.

13. Place large knob on REFERENCE LEVEL control and tighten one set screw. Turn control fully clockwise. Push knob in and again turn fully clockwise. Loosen set screw. Hold slotted crank (A2MP71) against fixed lockout (A2MP78) at rear of switch assemblies. Place black index disc (A2MP10) over front end of fixed shaft with REF LEVEL dBm window toward top of front panel. Secure index disc with small retaining ring.

14. Pull large knob away from front dress panel until index disc is properly seated in recess of large knob. Turn knob so "−90" appears in REF LEVEL dBm window and tighten set screws.

15. Place REF LEVEL FINE knob on REF LEVEL FINE control and tighten one set screw. Turn REF LEVEL FINE control fully counterclockwise. Loosen set screw and set REF LEVEL FINE knob for an indication of 0 (centered under REF LEVEL dBm window). Tighten set screws.

16. Turn three small shafts (PRESELECTOR PEAK, MANUAL SWEEP, and TRIGGER LEVEL) fully clockwise. Place small knob on MANUAL SWEEP control and position so mark on small knob points to last mark on front dress panel (approximately 5 o'clock). Tighten set screws. Place small knobs on PRESELECTOR PEAK and TRIGGER LEVEL controls. Position each small knob so mark points to same relative position as setting for MANUAL SWEEP control. Tighten set screws.

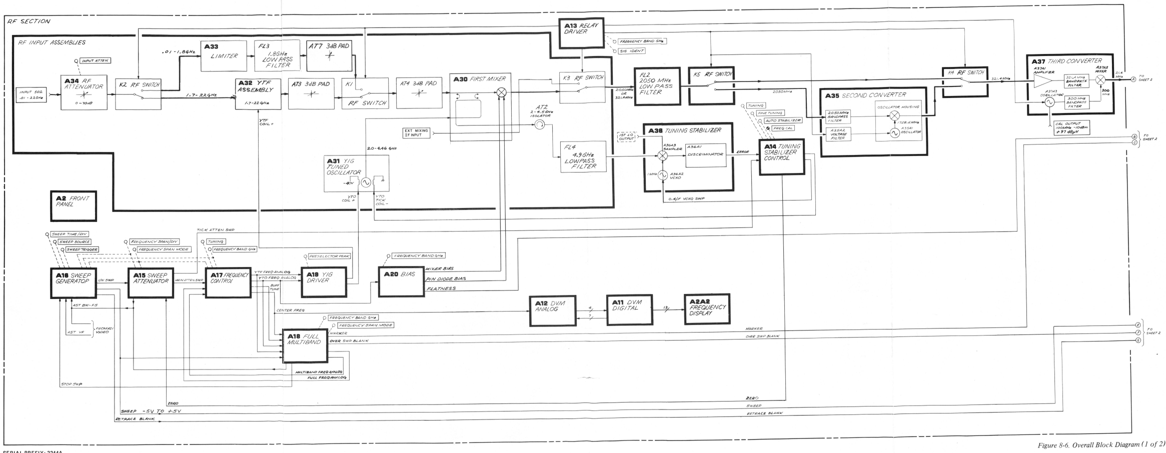

Figure 8-6. Overall Block Diagram (1 of 2)

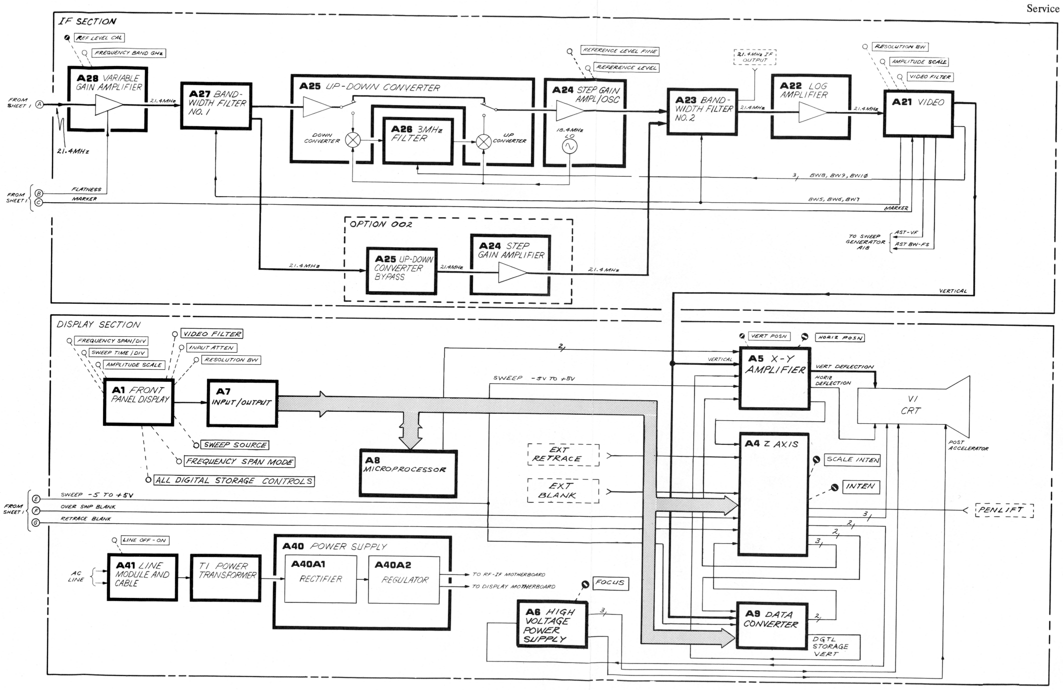

Figure 8-6. Overall Block Diagram (2 of 2)

DIGITAL STORAGE SECTION, CIRCUIT DESCRIPTION

The Digital Storage Section consists of the following assemblies:

- A4 Z Axis Assembly
- A7 Input/Output Assembly
- A8 Microprocessor Assembly
- A9 Data Converter Assembly

These circuits perform two major functions. One major function – controlled by the Center Processing Unit (CPU) in A8 – is to acquire display data, process it, and store it in Stroke Memory. The other major function – controlled by the Counter – is to retrieve data from Stroke Memory and to display it as individual strokes on the CRT.

To acquire display data, the CPU measures the analog horizontal voltage (SWEEP −5 to +5V) and the analog VERTICAL voltage. Since the CPU can only process digital information, it uses the Control Latches in A7 Input/Output Assembly to control the circuitry (in A9 Data Converter) that converts the analog signals to digital information. This circuitry consists of Multiplexer, Peak Detector, Track and Hold, and Analog to Digital Converter. A16 Sweep Generator Assembly establishes the rate of data acquisition, which varies with instrument sweep speed. During normal operation, the CPU alternately takes samples of the horizontal and vertical signals; the horizontal (X) value determines the memory address at which the vertical (Y) value is stored.

The Counter in A8 controls the other major function of the Digital Storage Section: to retrieve data from Stroke Memory in A8 and to convert that data to individual strokes on the CRT.

The vertical signal is generated by the Digital Y Generator in A9 Data Converter Assembly. Since the Y data is stored sequentially in Stroke Memory in A8, the Counter can determine the address of the data needed to draw each successive stroke. The Counter accesses Stroke Memory whenever the CPU is accessing the Program ROM to guarantee that there is no conflict between the CPU and the Counter in addressing Stroke Memory. The data acquired during this access is then stored in the Y Data Buffer in A9. Control logic from A8 determines the time at which the Y Data Buffer transfers its data to the Digital Y Generator. The Digital Y Generator converts the retrieved data to an analog voltage that is applied through A5 X-Y Amplifier Assembly to the vertical deflection plates of the CRT.

The horizontal (X) signal for the digital storage display is generated in A5. The Digital X Generator in that assembly receives control signals derived from the Counter in A8 and generates an appropriate ramp voltage that is amplified and applied to the horizontal deflection plates of the CRT.

The Z signal, generated in A4 Z Axis Assembly, controls both the brightness and the blanking of the trace. The Digital Y Generator in A9 Data Converter sends stroke length information to Z Modulation in A4. Stroke length information is then converted to a brightness signal, so that long strokes will not be dimmer than short ones. Blanking Logic in A4 combines all blanking inputs and control logic inputs to produce one blanking signal that controls the blanking of the CRT.

The Digital Storage Display section also performs secondary functions that are integral to the operation of the instrument but are not necessarily involved with the acquisition and display of X and Y signals.

Secondary functions performed by the CPU include response to display control push buttons, interpretation of instrument control switches, operation of the HP-IB interface, and execution of test routines.

Input Interfaces in A7 Input/Output Assembly provide the CPU with information about instrument controls. Two of the interfaces send data from the display push buttons to the CPU to establish the display mode of operation. Another interface establishes instrument options that are controlled by the CPU. Nine of the interfaces receive data about the control settings of the RF-IF portion of the instrument. The CPU converts this data into character strings and stores them in System Memory in A8 Microprocessor Assembly. The Character

Generator in A4 Z Axis Assembly retrieves these character strings to generate the control setting display on the CRT.

The HP-IB Interface allows the CPU to input and output data to external devices and to receive commands via A43 HP-IB Connector Assembly.

Nine test routines in the Program ROM are used to adjust, verify, and troubleshoot the digital storage circuitry. For example, at instrument turn-on, the CPU uses four of the routines to perform a system self-test to verify the integrity of the Program ROM, the System Memory, and the Stroke Memory.

Secondary functions controlled by the Counter include display of characters, graticule illumination, an analog trace for fast sweep speeds, and an analog dot in the manual sweep mode.

To draw characters on the CRT screen (see Figure 8-7), character dot data is imposed on a fixed vertical raster, which is approximately one division high at the top of the screen. To create the raster, two fixed Y values are held in the Y Data Buffer in A9 and are fed alternately to the Digital Y Generator. Since 16 vertical strokes are dedicated to each character, the Counter must access a new character in System Memory once every 16 strokes. The Counter accesses the System Memory and inputs the data to the Character Generator whenever the CPU accesses the Program ROM.

For graticule illumination, a vertical raster, of full screen amplitude, is generated by holding zero and full-scale as the two values in the Y Data Buffer. At the same time, the beam is defocused to give uniform illumination.

At sweep speeds of 2 ms or faster, the microprocessor does not have enough time to convert analog data to digital information and to store it. To maintain display information, a mixed mode takes place in which character display and graticule illumination are digitally controlled while the displayed trace is analog. Both of the digitally derived traces are blanked (but not cleared) during mixed mode operation. The Counter cycles through its normal display sequence: trace A (blanked), graticule illumination, trace B (blanked), and characters; except that the trace B timing is altered. (Display refresh waveforms are illustrated in Figure 8-7.) At the start of trace B, the Counter stops and waits for the next analog sweep to begin. The CRT then displays the analog signal for the same amount of time it would have normally displayed trace B. When the trace B time is over, the Counter stops again and waits for the analog trace in progress to finish. (The RETRACE BLANK line from A16 Sweep Generator signals the start and completion of the analog trace.) When the analog trace is finished, the Counter resumes operation.

When the instrument is in manual sweep mode, the digital display operates normally except for the blanking of both traces A and B. The display is switched to analog for a brief time at the start of the time slots allotted to traces A and B to produce an analog signal that is no brighter than the rest of the display.

DIGITAL STORAGE TROUBLESHOOTING

The firmware of the HP 8569B contains a set of nine test routines that are used to perform adjustments, to verify correct operation of the digital storage section, and to troubleshoot the digital storage circuitry. The test and adjustment procedures are found in Section V, Adjustments.

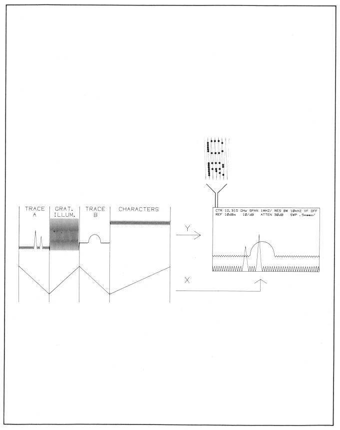

Figure 8-7. Display Refresh Waveforms

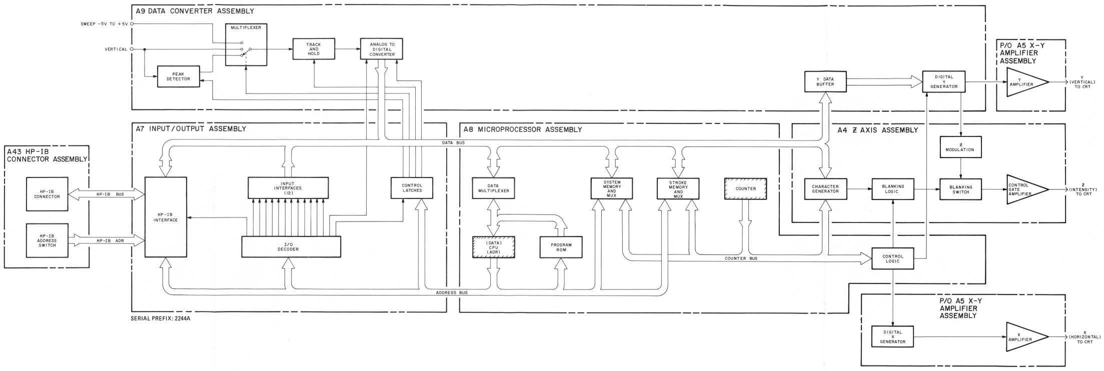

SERIAL PREFIX: 2244A

Figure 8-8. Digital Storage Section, Block Diagram

A1 FRONT PANEL DISPLAY ASSEMBLY, CIRCUIT DESCRIPTION

A1 Front Panel Display Assembly consists only of A1A1 Display Switch Assembly, which provides the switches and potentiometers affecting the CRT display.

A1A1 Display Switch Assembly

A1A1 Display Switch Assembly includes 15 push button switches and 2 potentiometers:

□ CLEAR/RESET

□ TRACE A WRITE

□ TRACE B WRITE

□ TRACE A MAX HOLD

□ TRACE B MAX HOLD

□ TRACE A STORE VIEW

□ TRACE B STORE VIEW

□ TRACE A STORE BLANK

□ TRACE B STORE BLANK

□ SAMPLE

□ DGTL AVG

□ INP – B→A

□ PLOT GRAT

□ PLOT CHAR

□ PLOT TRACE

O SCALE INTEN

O INTEN

Refer to Section III for a description of the individual controls. References to these controls, as they apply to other assemblies, may be found in the circuit descriptions of A4 Z Axis Assembly and A7 Input/Output Assembly.

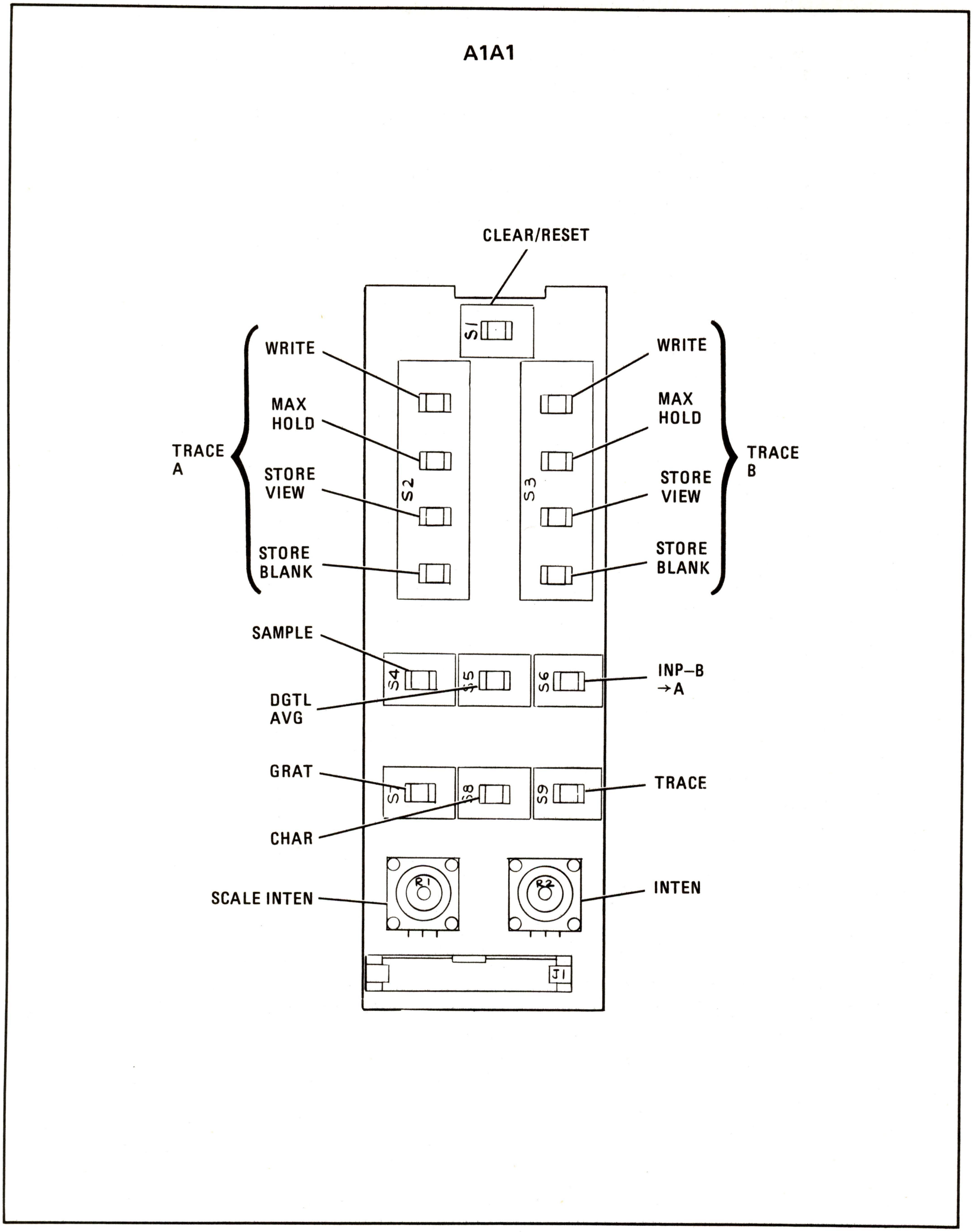

Figure 8-9. A1A1 Display Switch Assembly, Component Locations

A3 DISPLAY ADJUST ASSEMBLY, CIRCUIT DESCRIPTION

A3 Display Adjust Assembly includes four front-panel screwdriver adjustments: FOCUS, TRACE ALIGN, HORIZ POSN, and VERT POSN.

A3R1 FOCUS varies the potential on the focus grid of the CRT. (Refer to A6 High Voltage Power Supply Assembly.)

A3R2 TRACE ALIGN adjusts the amount of current through the Trace Align coil. (Refer to A6 High Voltage Power Supply Assembly.)

The potentiometers A3R3 HORIZ POSN and A3R4 VERT POSN are discussed in the circuit description of A5 X-Y Amplifier Assembly.

A3

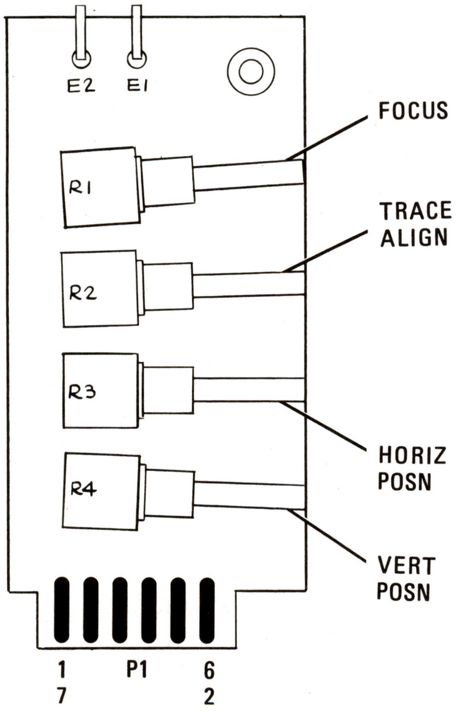

Figure 8-10. A3 Display Adjust Assembly, Component Locations

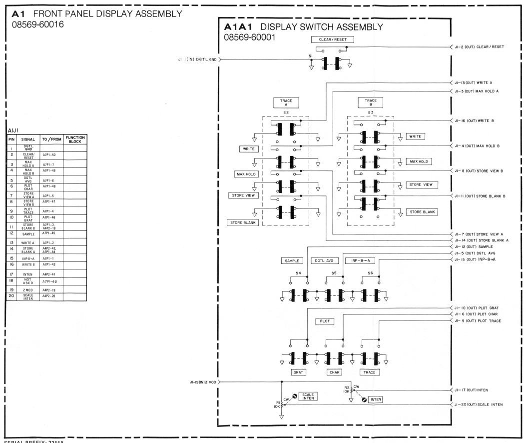

SERIAL PREFIX: 2244A

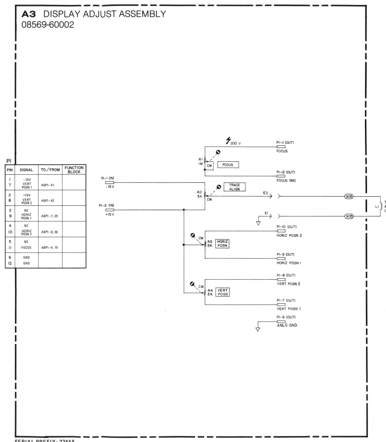

SERIAL PREFIX: 2244A

NOTES

1. REFERENCE DESIGNATORS WITHIN THIS ASSEMBLY ARE ABBREVIATED. FOR COMPLETE REFERENCE DESIGNATION, PREFIX ABBREVIATION WITH ASSEMBLY DESIGNATION.
2. UNLESS OTHERWISE INDICATED:
   RESISTANCE IS IN OHMS (Ω)
   CAPACITANCE IS IN PICOFARADS (PF)
   INDUCTANCE IS IN MICROHENRIES (μH)
3. MNEMONIC TABLE

MNEMONIC	DEFINITION
CLEAR/ RESET	CLEARS TRACES AND RESETS CPU.
DGTL AVG	DIGITAL AVERAGE
FOCUS	DISPLAY FOCUS CONTROL
HORIZ POSN 1	HORIZONTAL POSITION 1 CONTROL
HORIZ POSN 2	HORIZONTAL POSITION 2 CONTROL
INP–B→A	DISPLAYS TRACE A AS DIFFERENCE BETWEEN INPUT SIGNAL AND STORED TRACE B.
INTEN	DISPLAY INTENSITY CONTROL
MAX HOLD A	HOLDS MAXIMUM VALUE OF TRACE A.
MAX HOLD B	HOLDS MAXIMUM VALUE OF TRACE B.
PLOT CHAR	TRANSMITS CHARACTER DATA TO PLOTTER.
PLOT GRAT	TRANSMITS GRATICULE DATA TO PLOTTER.

MNEMONIC	DESCRIPTION
PLOT TRACE	TRANSMITS TRACE DATA TO PLOTTER.
SAMPLE	SAMPLES INPUT SIGNAL AT REGULAR INTERVALS.
SCALE INTEN	CONTROLS GRATICULE ILLUMINATION.
STORE BLANK A	BLANKS TRACE A ON DISPLAY.
STORE BLANK B	BLANKS TRACE B ON DISPLAY.
STORE VIEW A	STORES CURRENT TRACE A.
STORE VIEW B	STORES CURRENT TRACE B.
VERT POSN 1	VERTICAL POSITION 1 CONTROL
VERT POSN 2	VERTICAL POSITION 2 CONTROL
WRITE A	UPDATES AND DISPLAYS TRACE A.
WRITE B	UPDATES AND DISPLAYS TRACE B.

A1, A3

Figure 8-11. A1 Front Panel Display Assembly and A3 Display Adjust Assembly, Schematic Diagram

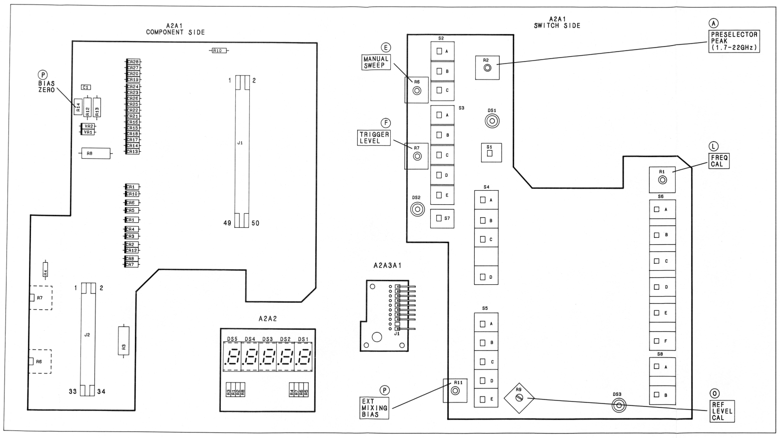

Figure 8-12. A2A1 Front Switch Assembly, A2A2 Frequency Display Assembly, and A2A3A1 Tuning Innerconnect, Component Locations

A2 FRONT PANEL ASSEMBLY

08569-60057
(SHEET 1 OF 2)

A2A1J1

PIN	SIGNAL	TO/FROM	FUNCTION BLOCK
1	NARROW	A15P1-30, A16P1-42, A7P1-8, A18P1-42, A19P1-15	G
2	B6	A13P1-30, A16P1-20, A17P1-20, A18P1-20, A20P1-20, RPJ2-6 (918)	K
3	B5	A13P1-13, A16P1-19, A17P1-19, A18P1-19, A20P1-19, A28P1-40, RPJ2-5 (917)	K
4	B7	A11P1-14 A13P1-14 A16P1-21 A17P1-21 A18P1-21 A20P1-21 A29CR1	K
5	ZERO	A14P1-29, A15P1-29, A7P1-9	H
6	B8	A16P1-22 A17P1-22 A20P1-22 A29CR2	K
7	B4	A16P1-18, A17P1-18, A18P1-18, A20P1-18, A28P1-39, RPJ2-4 (916)	K
8	1FG6	A22P1-40, A7P1-51	M
9	MULTIBAND	A7P1-10, A16P1-40, A17P1-40, A18P1-40	H
10	1FG5	A22P1-39, A7P1-52	M
11	B3	A16P1-17, A17P1-17, A18P1-17, A20P1-17, RPJ2-3 (915), A28P1-38	K
12	1FG4	A22P1-38, A7P1-53	M
13	FULL	A15P1-27, A16P1-39, A17P1-39, A18P1-39, A7P1-11	H
14	1FG3	A24P1-33, A7P1-54	M
15	B2	A17P1-16, A18P1-16, A16P1-16, A20P1-16, RPJ2-2 (914)	K
16	1FG2	A24P1-34, A7P1-55	M
17	B1	A13P1-12, A14P1-15, A16P1-15, A17P1-15, A18P1-15, A20P1-15, RPJ2-1 (913)	K
18	1FG1	A24P1-35, A7P1-56	M
19	EXT/MNL SWP	A16P1-38, A7P1-12	C
20	FS X2.5	A15P1-11, A16P2-1, A7P1-57	G
21	2ØA2	A34P1-10, A7P1-13	N
22	FS÷2	A15P1-12, A16P2-2, A7P1-58	G
23	2ØA3	A34P1-9, A7P1-14	N
24	FS÷4	A15P1-13, A16P2-3, A7P1-59	G
25	ØA3	A34P1-3	N
26	FS÷10	A15P1-14, A16P2-4, A7P1-60	G
27	1ØA1	A34P1-2, A7P1-15	N
28	FS÷100	A15P1-15, A7P1-61	G
29	ØA2	A34P1-4,	N
30	FSK	NOT USED	G
31	ØA1	A34P1-13	N
32	FSM	NOT USED	G
33	+26V RETURN	A40A2J2-3 (1)	N
34	+26V UNREG	A40A2J2-1 (903)	N
35	−15V	A40A2J2-15 (97)	NOT USED
36	2ØA4	A34P1-5, A7P1-62	N
37	2dB/DIV	A21P1-33, A7P1-17	J
38	+15V	A40A2J2-11 (92)	NOT USED
39	5dB/DIV	A21P1-32, A7P1-18	J
40	ØA4	A34P1-11	N
41	10dB/DIV	A21P1-31, A7P1-19	J
42	NC		
43	MNL SWP	A7P1-20	C
44	B9	A16P1-41, A17P1-37, A20P1-37, A29CR3	K
45	BWØ	A21P1-13, A7P1-22	H
46	B10	A17P1-38, A20P1-38, A29CR4	K
47	BW4	A21P1-17, A7P1-64	H
48	ST FAST	A16P1-37, A2A4J1-16, A7P1-28	C
49	LOG/LIN	A22P1-31, A7P1-21	J
50	ST CAL	A16P1-36, A2A4J1-18, A7P1-27	C

A2A1J2

PIN	SIGNAL	TO/FROM	FUNCTION BLOCK
1	+15V	A40A2J2-7,11 (92)	W
2	VIDEO TRIG	A21P1-30	D
3	LINE TRIG	A40A2J2-4 (91)	D
4	▽	A29	W
5	−15V	A40A2J2-15 (97)	W
6	TUNE STAB	A14P1-23	B
7	START/RESET	A16P1-43, A7P1-37 (938)	D
8	FREQ CAL	A14P1-8	L
9	+5.2V	A40A2J2-10 (92)	W
10	REF LEVEL CAL	A28P1-36, A32-R6, A29R6	O
11	▽1	A29	W
12	TRIG LEVEL	A16P2-10	F
13	EXT SWP -5V TO +5V	A16P1-10	C
14	TRIG	A16P2-9	D
15	BW COM	A2A4J1-7, S1 (94)	H
16	SWP LIGHT	A16P2-8	I
17	FINE W	A24P1-41, (A29R7) (906)	R
18	MNL SWP LEVEL	A16P2-7	E
19	FINE CW	A24P1-40 (905)	R
20	PRESELECT PEAK	A19P1-12	A
21	BW4X	A2A4J1-23	H
22	NC		
23	BWØX	A2A4J1-25	H
24	FMB VF	A21P1-29	H
25	EXT MIX BIAS	A30 (908)	P
26	NC		
27	INT SWP -5V TO +5V	A16P1-8	C
28	NC		
29	SWEEP -5V TO +5V	A16P1-9, A18P1-32, A19P1-13, A10R4, A29R10	C
30	-BVT	A22P1-8	J
31	1MHz/DIV	A13P1-11	H
32	+15V	A40A2J2-7,11 (92)	W
33	FREE RUN	A16P1-44	D
34	ATTEN EXT TRIG	A29R4	D

A2A3J1

PIN	SIGNAL	TO/FROM	FUNCTION BLOCK
1	NC		
2	NC		
3	NC		
4	+22.3V REF	A17P1-10 (913)	S
5	+10V REF	A17P1-9 (914)	S
6	TUNE	A17P1-32 (915)	S
7	FINE TUNE	A14P1-9 (916)	S
8	VCXO SWP	A14P1-12 (917)	S
9	2/F VCXO SWP	A14P1-13 (918)	S
10	NC		

A2A2J1

PIN	SIGNAL	TO/FROM	FUNCTION BLOCK
1	NC		
2	CFDf	A11J2-2	Q
3	CFDg	A11J2-3	Q
4	CFDe	A11J2-4	Q
5	CFDd	A11J2-5	Q
6	NC		
7	CFDdp	A11J2-7	Q
8	CFDc	A11J2-8	Q
9	CFDb	A11J2-9	Q
10	CFDa	A11J2-10	Q
11	CFDO	A11J2-11	NOT USED
12	CFD1	A11J2-12	Q
13	CFD2	A11J2-13	Q
14	CFD3	A11J2-14	Q
15	CFD4	A11J2-15	Q
16	CFD5	A11J2-16	Q

A2A3W1P1

PIN	SIGNAL	TO / FROM	FUNCTION BLOCK
1	NC		
2	NC		
3	NC		
4	+22.3V REF	A17P1-10 VIA A29J5-4	S
5	+10V REF	A17P1-9 VIA A29J5-5	S
6	TUNE	A17P1-32 VIA A29J5-6	S
7	FINE TUNE	A14P1-9 VIA A29J5-7	S
8	VCXO SWP	A14P1-12 VIA A29J5-8	S
9	2/F VCXO SWP	A14P1-13 VIA A29J5-9	S
10	NC		

A2A4J1

PIN	SIGNAL	TO/FROM	FUNCTION BLOCK
1	BW2	A21P1-15, A7P1-71	T
2	BW3	A21P1-16	T
3	BW1	A21P1-14, A7P1-70	T
4	BW8	A21P1-21, A26P1-36, A7P1-30	T
5	BW9	A21P1-22, A26P1-37, A7P1-69	T
6	BWK	NOT USED	T
7	BW COM	A2A1J2-15, RP J2-9 (94)	T
8	STS	NOT USED	V
9	NOT USED	A29U3-9	T
10	+5.2V	A40A2J2-10 (92), A7P2-3,43	NOT USED
11	▽	A29	V
12	STM	NOT USED	V
13	STU	NOT USED	V
14	+10VTV	A16P2-12, A7P1-29	NOT USED
15	GØ	A7P1-68	U
16	ST FAST	A16P1-37, A2A1J1-48, A7P1-28	V
17	G1	A7P1-67	U
18	ST CAL	A16P1-36, A2A1J1-50, A7P1-27	V
19	G2	A7P1-66	U
20	ST X100	A16P1-14, A7P1-26	V
21	G3	A7P1-65	U
22	ST X10	A16P1-13, A7P1-25	V
23	BW4X	A2A1J2-21	T
24	ST X5	A16P1-12, A7P1-24	V
25	BWØX	A2A1J2-23	T
26	ST X2	A16P1-11, A7P1-23	V

A2

SERIAL PREFIX: 2244A

Figure 8-13. A2 Front Panel Control Assembly, Schematic Diagram (1 of 2)

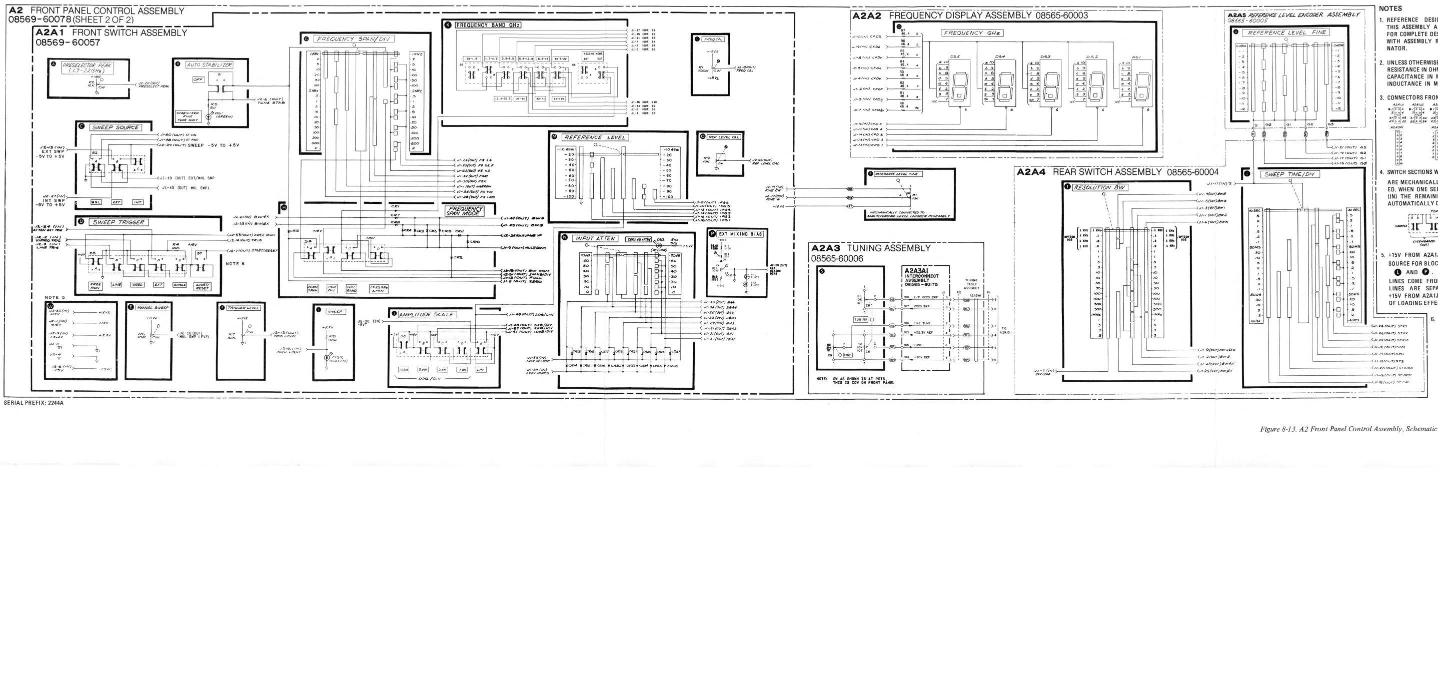

NOTES

1. REFERENCE DESIGNATORS WITHIN THIS ASSEMBLY ARE ABBREVIATED. FOR COMPLETE DESIGNATOR, PREFIX WITH ASSEMBLY REFERENCE DESIGNATOR.
2. UNLESS OTHERWISE INDICATED:
   RESISTANCE IN OHMS (Ω)
   CAPACITANCE IN MICROFARADS (μF)
   INDUCTANCE IN MICROHENRIES (μH)
3. CONNECTORS FRONT VIEW
4. SWITCH SECTIONS WITHIN DASHED BOX ARE MECHANICALLY INTERCONNECTED. WHEN ONE SECTION IS ENGAGED (IN) THE REMAINING SECTIONS ARE AUTOMATICALLY DISENGAGED (OUT).
5. +15V FROM A2A1J2-32 IS THE +15V2 SOURCE FOR BLOCKS A E F L AND P. ALL OTHER +15V LINES COME FROM A2A1J2-1. THESE LINES ARE SEPARATED SO THAT +15V FROM A2A1J2-32 WILL BE FREE OF LOADING EFFECTS.
6. ACTION OF START/RESET SWITCH IS MOMENTARY.

A2

Figure 8-13. A2 Front Panel Control Assembly, Schematic Diagram (2 of 2)

A4 Z AXIS ASSEMBLY, CIRCUIT DESCRIPTION

A4 Z Axis Assembly provides character generator circuitry for cathode ray tube (CRT) annotation and controls blanking and intensity of the signals to the CRT.

Character Generator Ⓐ

The Character Generator circuit translates the data from System Memory into character information. During the character portion of the display refresh cycle, a small vertical raster is drawn in the space above the top graticule line of the CRT. By unblanking portions of the raster, dot matrix characters are generated.

Buffer U15 receives the data stored in the System RAM of A8 Microprocessor Assembly. The character data received is in the form of the American Standard Code for Information Interchange (ASCII). These codes, combined with the count signals from the Counter in A8, are used as the address to the character ROM, U3.

The dot matrix output from U3 is the input to both U8 and U14 shift registers. U8 shifts out the even dot positions; U14 shifts out the odd dot positions. Each dot is 250 ns wide. U8 and U14 alternately transfer out these dots from top to bottom in an 8- by 8-dot matrix for each symbol.

The logic from U2A, U2B, and U2C interleaves the even and odd dot positions. U2D inverts the SYS CLK signal.

U9 provides a timing signal (DOT CLK EN) for U8 and U13. This signal is the STROKE SEL signal delayed by one SYS CLK pulse.

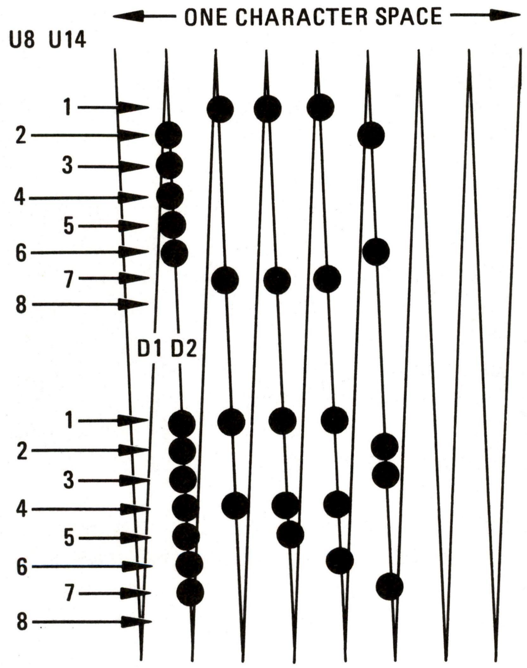

(See also Figure 8-7.)

For one stroke of a character:

Counter addresses System Memory location $82. (Refer to Table 8-2 in A7 circuit description of microprocessor addresses.) ASCII letter C is latched into buffer U15. The ASCII code is used as the address to ROM U3. The data out of U3 is the left column of ASCII letter C. Odd bits are loaded into shift register U14; even bits are loaded into U8. U14 and U8 are loaded at time D1. (See preceding illustration.) U14 and U8 alternately shift out the bits from top to bottom.

The Counter then addresses System Memory location $182. ASCII letter R is latched into buffer U15. The ASCII code is used as the address to ROM U3. The data out of U3 is the left column of ASCII letter R. Odd bits are loaded into shift register U14, even bits are loaded into U8. U14 and U8 are loaded at time D2. Shift registers U14 and U8 alternately shift out the bits from top to bottom.

The preceding sequence occurs eight times for each character space. Sixty-four repetitions of character space are required to complete one sweep of characters. Succeeding character spaces are sequentially numbered. (For example, T and E, the next character space, are numbered $83 and $0183, respectively.)

Blanking Logic (B)

The Blanking Logic circuit decodes timing and switch positions to turn off the beam on the CRT. During analog display, blanking is based on the sweep ramp. During digital display, blanking is based on the count chain in A8 Microprocessor Assembly.

The signal at TP2 (BLANK) is the blanking signal that turns off the beam on the CRT. When the signal at TP2 is high, the CRT is blanked. The following input lines control the blanking of the CRT:

- RETRACE BLANK or EXT RETRACE, when high, blanks the CRT during analog display.
- OVERSWP BLANK or EXT BLANK, when high, blanks the CRT during analog sweep.
- STROKE GEN TIMING, when low, blanks for 1 μs, each 7 μs stroke. This blanking prevents display of transient signals associated with data changing to U14 in A9 Data Converter Assembly. C43 and L4 are used to delay the STROKE GEN TIMING signal.
- STROKE BLANK LATCHED transfers all blanking information (from Stroke Memory on A8 Microprocessor) to blank the digital display. Blanking information includes oversweep blanking, external blanking, and the blank ahead marker. When STROKE BLANK LATCHED is high, digitally displayed strokes are blanked.
- STORE BLANK A and STORE BLANK B respond to the front-panel push buttons that have the same name. When STORE BLANK A is low, trace A is blanked during trace A display time. When STORE BLANK B signal is low, trace B is blanked during trace B display time. When both signals are low, digital display is blanked and analog display is selected (via HDGTL/LANLG signal).
- ANLG FAST SWP EN, when high, blanks digital traces. This blanking enables a mixed mode to take place in which character display and graticule illumination are digitally controlled, and trace data is derived from analog information. (For a detailed analysis of this mixed mode of operation, refer to circuit descriptions of both A8 Microprocessor Assembly and the Digital Storage Section.)
- The (not) CHAR DOTS signal controls blanking and unblanking of character dots. Character dots are drawn when the signal is low; the dots are blanked when the signal is high.

The following control lines are not directly involved in the blanking of the CRT:

- HDGTL/LANLG is used to select digital or analog display. When this signal is high, digital display is selected; when the signal is low, analog display is selected. The HDGTL/LANLG signal is also used to select digital or analog blanking signals at the AND gates in U6.
- ANLG FAST SWEEP is the timing signal for the mixed mode of operation described earlier.
- L X CLAMP RIGHT is a timing signal used to reset the Digital X Generator circuit on the A5 X-Y Amplifier Assembly during digital display. In the manual sweep mode, an analog dot is displayed during the short time when L X CLAMP RIGHT is low so that the normal display refresh cycle is not interrupted.

- ROM SEL and SYS CLK are two of the three signals that combine to form Ⓐ 1, which is the clock input to U15 in the Character Generator circuit.
- DSPL CHAR is a timing signal that is high for the 7.16 ms that characters are drawn on the CRT.
- DSPL TRACE is a timing signal that is high for the two 3.58 ms periods that trace A and trace B are drawn on the CRT.
- Signals Ⓖ 4 and Ⓖ 3 are control signals for U1 in the Z Modulation circuit.
- L INT/EXT RETRACE and OVERSWP/EXT BLANK are monitored in A9 Data Converter Assembly by the microprocessor to control the blanking bits in Stroke Memory on A8. The L INT/EXT RETRACE signal is also processed by circuitry in A8 Microprocessor Assembly and is fed back to the Blanking Logic circuit as the ANLG FAST SWP signal.
- PENLIFT is used to provide an external penlift voltage whenever analog blanking occurs.

Z Modulation Ⓒ

The Z Modulation circuit is used to convert stroke length information into an intensity signal.

Input to the Z Modulation circuit is a bidirectional current that is proportional to the length of each 6 μs stroke. INTEN BAL adjusts the crossover point of the varying current. The absolute value of this current is converted (by U4 and Q18) to a corresponding voltage, 0V to +4V. The voltage, observed at TP3 (MOD OUT), varies the Z modulation signal going to the INTEN and SCALE INTEN potentiometers so that long strokes are as bright as short strokes.

GRAT EN and INTEN MOD EN control the inputs to the multiplexer U1.

Example:

> When U1 pins 10 and 9 are low, pins 1 and 12 are selected as inputs.

The front-panel SCALE INTEN control is used to vary the intensity of graticule illumination; the INTEN control is used to vary the intensity of traces and of characters.

Voltage-to-Current Converter Ⓓ

The Voltage-to-Current Converter circuit converts the input voltage from the Z Modulation circuit into two current sinks to drive the Control Gate Amplifier and the Focus Gate Amplifier.

Common-emitter amplifiers Q5 and Q6 provide one current sink; Q8 and Q7 provide the other current sink. The differential amplifier pair, Q5 and Q8, have a nominal input voltage range from 0 to +1V. INTEN GAIN adjustment R4 controls the relative gain of the inverting and non-inverting sides of the amplifier.

Blanking Switch Ⓔ

The Blanking Switch circuit turns off the CRT beam whenever there is a logic high from the Blanking Logic circuit.

Control Gate Amplifier Ⓕ

The Control Gate Amplifier supplies a voltage to drive the control grid of the CRT. This voltage varies from +25V to +70V.

The amplifier is stabilized by both ac and dc feedback. R25 provides the dc feedback and HF TRIM potentiometer C6 adjusts the high frequency feedback. C5 acts in conjunction with C6 and HF GAIN R26 to set the high frequency response of the amplifier.

MIN INTEN adjust, R77, sets the minimum voltage at TP5. Maximum intensity is obtained when the output signal (CONTROL GATE) is at +70V.

Focus Gate Amplifier Ⓖ

The Focus Gate Amplifier circuit supplies a correction voltage to the focus grid of the CRT to compensate for defocusing effects as intensity levels vary. This correction voltage varies from +5V to +70V. The voltage gain is set by INTEN DYN FOCUS adjust R30.

POSN DYN FOCUS input is used to maintain sharp focus as the horizontal input is swept. Correction increases as CRT beam moves away from the center of the screen.

Q1 is turned on during the graticule illumination portion of the display refresh cycle. This action defocuses the beam to provide a more uniform raster when graticule illumination is displayed.

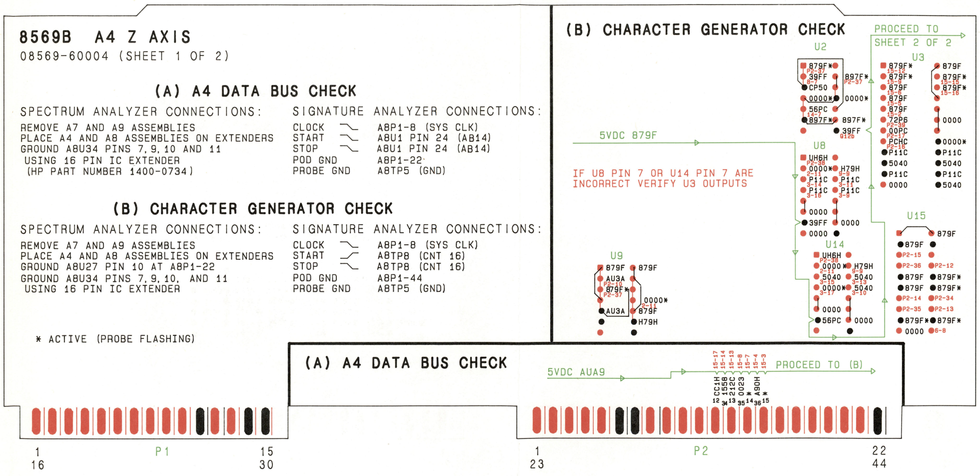

Figure 8-14. A4 Z Axis Signature Analysis and Troubleshooting Diagram (1 of 2)

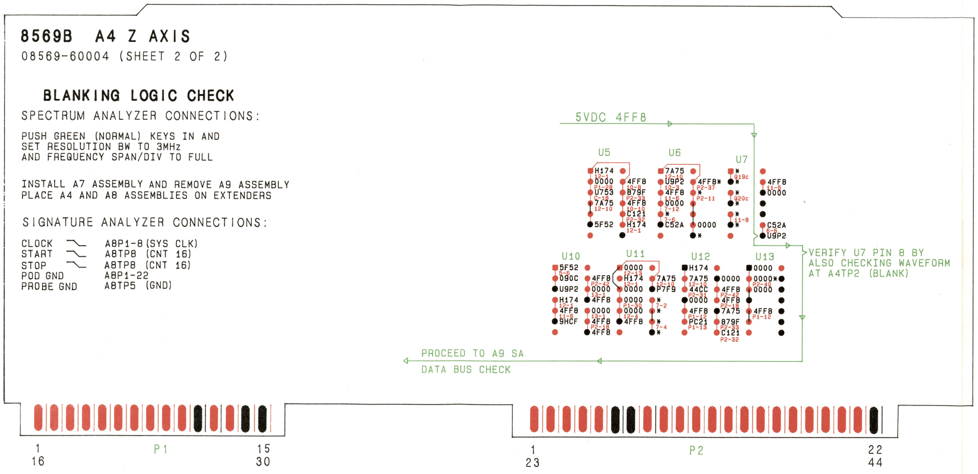

Figure 8-14. A4 Z Axis Signature Analysis and Troubleshooting Diagram (2 of 2)

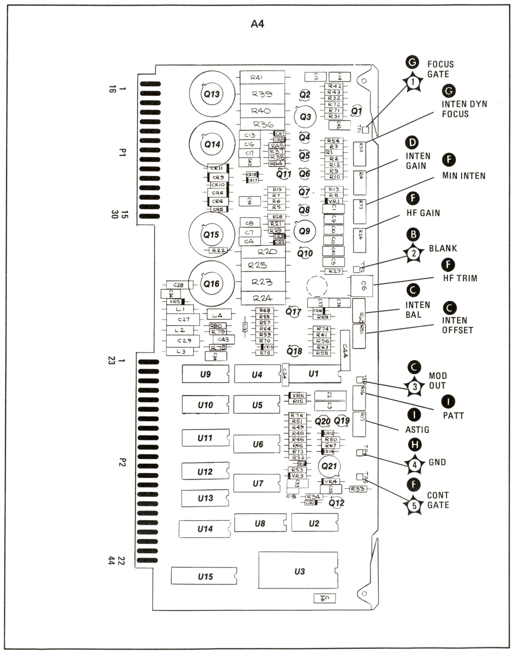

Figure 8-15. A4 Z Axis Assembly, Component Locations

A4 Z AXIS ASSEMBLY
08569-60004 (SHEET 1 OF 2)

P1

PIN	SIGNAL	TO/FROM	FUNCTION BLOCK
1	ANLG GND		H
16	ANLG GND		H
2	GND		H
17	STROKE LEN	A9P1–43	C
3	GND		H
18	GND		H
4	EXT RETRACE	RP J11 (935)	B
19	NC		
5	OVERSWP BLANK	(937) A18P1–38	B
20	NC		
6	NC		
21	NC		
7	NC		
22	NC		
8	NC		
23	NC		
9	NC		
24	POSN DYN FOCUS	A5P1–9, 31	G
10	NC		
25	NC		
11	NC		I
26	DSPL CHAR	A5P1–11, 33	B
12	L MKR EN	A7P2-24,64	B
27	DSPL TRACE	A5P1–12, 34	B
13	L X CLAMP RIGHT	A5P1–16, 38, A8P1–43	B
28	ANLG FAST SWP EN	A7P2-25, A8P1–17	B
14	L INT/EXT RETRACE	A8P1–38, A9P1–12	B
29	STROKE GEN TIMING	A8P1–40, A9P1–37	B
15	HDGTL/ LANLG	A5P1–13, 35	B
30	ANLG FAST SWP	A8P1–26	B

P2

PIN	SIGNAL	TO/FROM	FUNCTION BLOCK
1	–15V		H
23	–15V		H
2	+15V		H
24	+15V		H
3	+158V		H
25	+158V		H
4	DGTL GND		H
26	DGTL GND		H
5	+5.2V		H
27	+5.2V		H
6	ACCEL	(8) CRT	I
28	PATT	(98) CRT	I
7	ASTIG	(96) CRT	I
29	RETRACE BLANK	(934) RP, A7, A16	B
8	OVERSWP/ EXT BLANK	A9P1-35	B
30	PENLIFT	RP J5 (957)	B
9	EXT BLANK	RP J8 (956)	B
31	CNT14	A8P1-37	B
10	STROKE SEL	A7, A8, A9	A
32	CNT15	A7, A8	B
11	ROM SEL	A7P2-18,58 A8P1–14	B
33	CNT 16	A7,A8	B
12	D14	A7, A8, A9	A
34	D13	A7, A8, A9	A
13	D12	A7, A8, A9	A
35	D11	A7, A8, A9	A
14	D10	A7, A8, A9	A
36	D9	A7, A8, A9	A
15	D8	A7, A8, A9	A
37	SYS CLK	A7, A8	A B
16	CNT6	A8P1–29	A
38	CHAR DOT SHIFT	A7, A8	A
17	CNT7	A8P1–28	A
39	CNT8	A7, A8	A
18	STORE BLANK B	A7P1–3, A1A1J1-11	B
40	STROKE BLANK LATCHED	A9P1–26	B
19	Z MOD	A1A1J1-19	C
41	INTEN	A1A1J1-12	C
20	SCALE INTEN	A1A1J1-20	C
42	STORE BLANK A	A7P1–44, A1A1J1-14	B
21	HV GND		H
43	HV GND		H
22	FOCUS GATE	A6P1–6, 21	G
44	CONTROL GATE	A6P1–5, 20	F

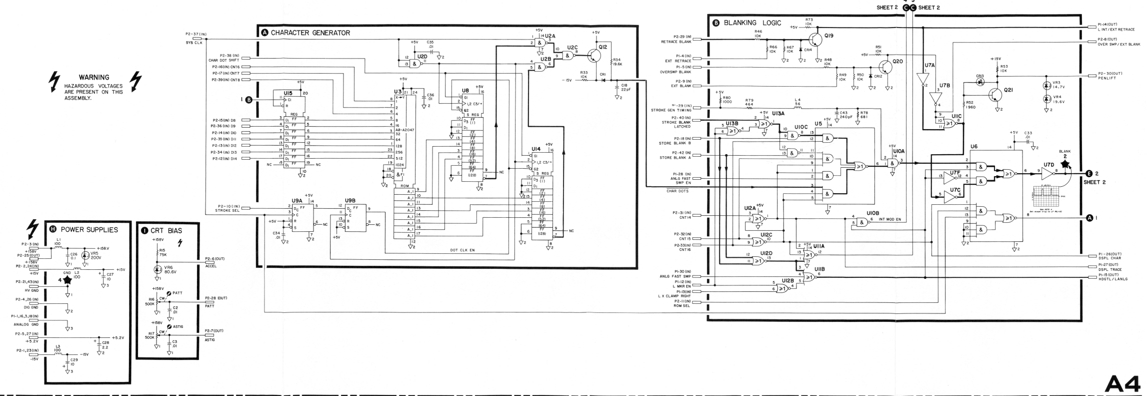

A4

SERIAL PREFIX: 2244A

Figure 8-16. A4 Z Axis Assembly, Schematic Diagram (1 of 2)

A4 Z AXIS ASSEMBLY
08569-60004 (SHEET 2 OF 2)

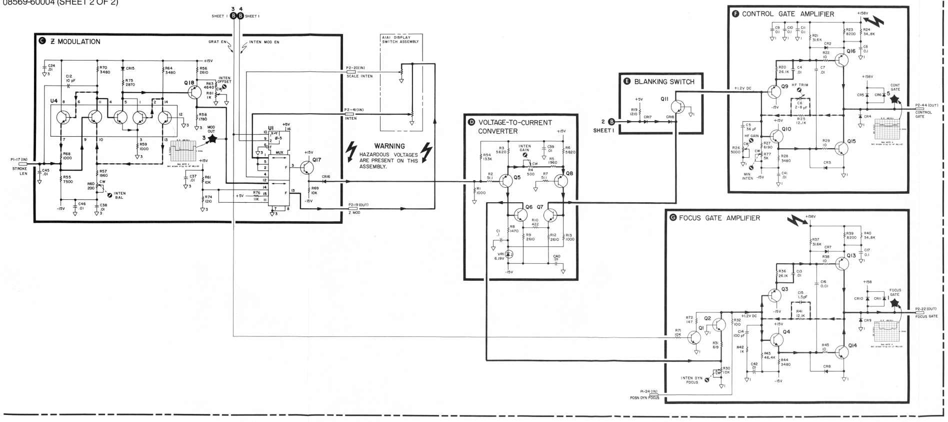

NOTES

1. REFERENCE DESIGNATORS WITHIN THIS ASSEMBLY ARE ABBREVIATED. FOR COMPLETE REFERENCE DESIGNATION, PREFIX ABBREVIATION WITH ASSEMBLY DESIGNATION.

2. UNLESS OTHERWISE INDICATED:
   RESISTANCE IS IN OHMS (Ω)
   CAPACITANCE IS IN PICOFARADS (PF)
   INDUCTANCE IS IN MICROHENRIES (μH)

3. MNEMONIC TABLE

MNEMONIC	DESCRIPTION
ACCEL	ACCELERATOR
ASTIG	ASTIGMATISM
CONTROL GATE	CONTROLS CRT BEAM INTENSITY.
DSPL CHAR	CHARACTER REFRESH TIME PERIOD
DSPL TRACE	TRACE REFRESH TIME PERIOD
FOCUS GATE	MAINTAINS CRT FOCUS WITH VARYING INTENSITY.
HDGTL/ LANLG	SWITCHES DIGITAL STORAGE ON AND OFF.
L INT/EXT RETRACE	PROVIDES RETRACE INFORMATION TO THE MICROPROCESSOR.
OVER SWP EXT/BLANK	PROVIDES BLANKING INFORMATION TO THE MICROPROCESSOR.
PATT	PATTERN
PENLIFT	PROVIDES EXTERNAL PENLIFT VOLTAGE.
Z MOD	STROKE LENGTH INTENSITY COMPENSATION

4. TEST POINT WAVEFORMS ASSUME THE FOLLOWING SETTINGS:
   GREEN (NORMAL) SETTINGS
   FREQ SPAN/DIV: 1 MHz
   FREQUENCY BAND: .01–1.8 GHz
   FREQUENCY: 0.100 GHz
   REFERENCE LEVEL: –10 dBm
   INPUT ATTEN: 10 dB

A4

Figure 8-16. A4 Z Axis Assembly, Schematic Diagram (2 of 2)

A5 X-Y AMPLIFIER ASSEMBLY, CIRCUIT DESCRIPTION

A5 X-Y Amplifier Assembly selects either analog or digital signals for the X and Y axes of the display and amplifies them to drive the horizontal and vertical deflection plates of the CRT. The assembly also generates the digital X sawtooth ramp, and it provides an X-axis compensating current for position dynamic focus.

Digital X Generator (A)

The Digital X Generator circuit produces the digital X sawtooth ramp. The display sequence is trace A, graticule illumination, trace B, and characters. (See Figure 8-7 in the Digital Storage Section circuit description.) This sequence, known as display refresh, repeats itself continually at an approximate rate of 55 Hz. The refresh rate should not be confused with the sweep rate controlled by the front-panel SWEEP TIME/DIV control. Traces A and B are swept from right to left. Graticule illumination and characters are swept from left to right.

Operational amplifier U4 and C40 form the integrator that generates the digital X sawtooth ramp. The fixed negative current (provided by U3A) through R105 combines with one of the two currents through R103 and R104 to drive the integrator. The currents through R103 and R104 are controlled by driver U2 with its two switching inputs, DSPL TRACE and DSPL CHAR, which originate in the Blanking Logic circuit of A4 Axis Assembly. (See Figure 8-25 in the circuit description of A8.) Since U2 is a CMOS device, it reacts to input logic levels by pulling its corresponding outputs to its supply voltage levels, which are +5V and ground. If the input voltage exceeds +2.5V, the output voltage is +5V; if input voltage is less than +2.5V, the output is at ground.

U3B provides +5V and U3A provides a matching −5V. DGTL X GAIN potentiometer R100 adjusts the outputs of U3A and U3B and the output of the integrator, thus controlling horizontal sweep length. The −5V output from U3A is the drive for the fixed negative current through R105.

To ensure that displayed traces A and B are not offset from each other, J-FET switch Q32 must instantaneously discharge C40 before either of these traces begins sweeping. When L X CLAMP RIGHT goes low, Q34 turns on and CR9 is reverse-biased. This turns on Q32, discharges C40, and sets the voltage level of the integrator at ground, causing the sweep to start at the same place on the screen for each trace.

At sweep times of 2 ms and faster, digital display circuitry does not have enough time to convert analog data to digital information and to store it. To maintain display information, a mixed mode takes place in which character display and graticule illumination are digitally controlled, while trace data is derived from analog information. (See Figure 8-26 in the A9 Microprocessor Assembly circuit description. Refer to both the A8 and the Digital Storage Section circuit descriptions for a more detailed analysis of this mixed mode of operation.) In this mixed mode, an analog sweep is displayed during the Trace B time frame. (Trace A is blanked.) A number of complete sweeps must be displayed to maintain uniform brightness of the analog trace. J-FET switch Q31 is held open by the X HOLD LEFT line from the Counter in A8 Microprocessor Assembly. This delays the start of character sweep until X HOLD LEFT returns to its normally low state.

The output voltage of the Digital X Generator is from −1.0V to 0V. Resistor divider network R107, R108, and R109 provides a positive 1.0-volt shift to change the output to 0V to +1.0V at TP4 (DGTL X).

Digital Storage/Conventional Switch (B)

The Digital Storage/Conventional Switch circuit selects either the digital storage mode or the analog mode for both X and Y amplifiers.

The four SPST JFET analog switches provided in U1 are connected as two DPDT switches. U1C and U1D are normally closed, and U1A and U1B are normally open. To select the digital storage display, the HDGTL/LANLG control line goes to +5V, selecting DGTL STORAGE VERT as the Y input and DGTL X from the Digital X Generator as the X input. To select the conventional display, the HDGTL/LANLG control line goes to 0V, selecting the two analog inputs as VERTICAL for Y (from A21 Video Assembly) and SWEEP −5 to +5V for X (from A16 Sweep Generator Assembly).

Voltage to Current Input Amplifier, Y Axis (C)

The Voltage to Current Input Amplifier, Y Axis circuit converts the input voltage from the Digital Storage/ Conventional Switch circuit into two current sinks to drive Current to Voltage Output Driver Amplifier A, Y Axis and Current to Voltage Output Driver Amplifier B, Y Axis.

The differential amplifier pair, Q24 and Q27, uses only one of the two available inputs. The nominal input voltage range is from 0V to +0.8V.

Common emitter amplifiers Q3, Q23, and Q24 provide one current sink, and Q9, Q26 and Q27, the other. All six stages have current gain, but only Q24 and Q27 have any significant voltage gain. The VERT POSN adjustment of A3 Display Adjust Assembly controls the relative gain of the inverting and non-inverting sides of the amplifier.

VERT GAIN adjustment R25 compensates for varying deflection factors of different CRTs. If R25 does not have enough range, the factory-selected resistor R23* may be changed.

Voltage to Current Input Amplifier, X Axis (D)

The operation of this circuit is identical to that of the Voltage to Current Input Amplifier, Y Axis except that the nominal input voltage range is from 0V to +1.0V.

Current to Voltage Output Driver Amplifier A, Y Axis (E) and Current to Voltage Output Driver Amplifier B, Y Axis (F)

These two amplifiers are identical. Amplifier A is driven by the non-inverting output of the Voltage to Current Input Amplifier, Y Axis (collector of Q3), and amplifier B is driven by its inverted output (collector of Q9). Amplifiers A and B are both wide-band, inverting amplifiers that drive the CRT vertical deflection plates. Only Amplifier A is described.

Emitter follower Q2 is ac coupled to Q1 and Q4 to improve the high frequency performance of the circuit. Q2 can be ignored as a current path for low frequency operation.

Assume that the input to amplifier A is open and that all the transistors have infinite beta; that is, their base currents are zero. The base voltage of Q4 is approximately +0.6V. The base voltage of Q1 is determined by the drop across R30 and R32 to be approximately +148V. This sets the collector current of Q1 to about 7 mA. The collector current of Q4 is also about 7 mA, since any current shunted through R31 into the base of emitter follower Q5 increases the voltage at the base of Q4, and that transistor is turned on sufficiently to sink 7 mA.

Now assume that the input of amplifier A is connected to the output of the Voltage to Current Input Amplifier, Y Axis. The current sunk by that input amplifier must be supplied by Q1 through R31. For every milliamp of current sunk by the input amplifier, the output voltage of amplifier A rises +23.7V to keep its input voltage near 0V.

The combined voltage gain of the Voltage to Current Input Amplifier, Y Axis and the Current to Voltage Output Driver Amplifier A, Y Axis is about 120.

Current to Voltage Output Driver Amplifier A, X Axis (G) and Current to Voltage Output Driver Amplifier B, X Axis (H)

The operation of these circuits is identical to that of the Current to Voltage Output Driver Amplifiers A and B, Y Axis.

Dynamic Focus, X Axis (I)

This current sinks varying amounts of current from the Focus Gate Amplifier of A4 Z Axis Assembly (via POSN DYN FOCUS) to maintain sharp focus as the X input is swept. Q11 and Q12 are alternately turned on to generate this current sink, which is a non-linear function of the absolute value of X. X DYN FOCUS rheostat R91 adjusts the amount of dynamic focus compensation. CR5 and CR6 provide temperature compensation for Q11 and Q12, respectively.

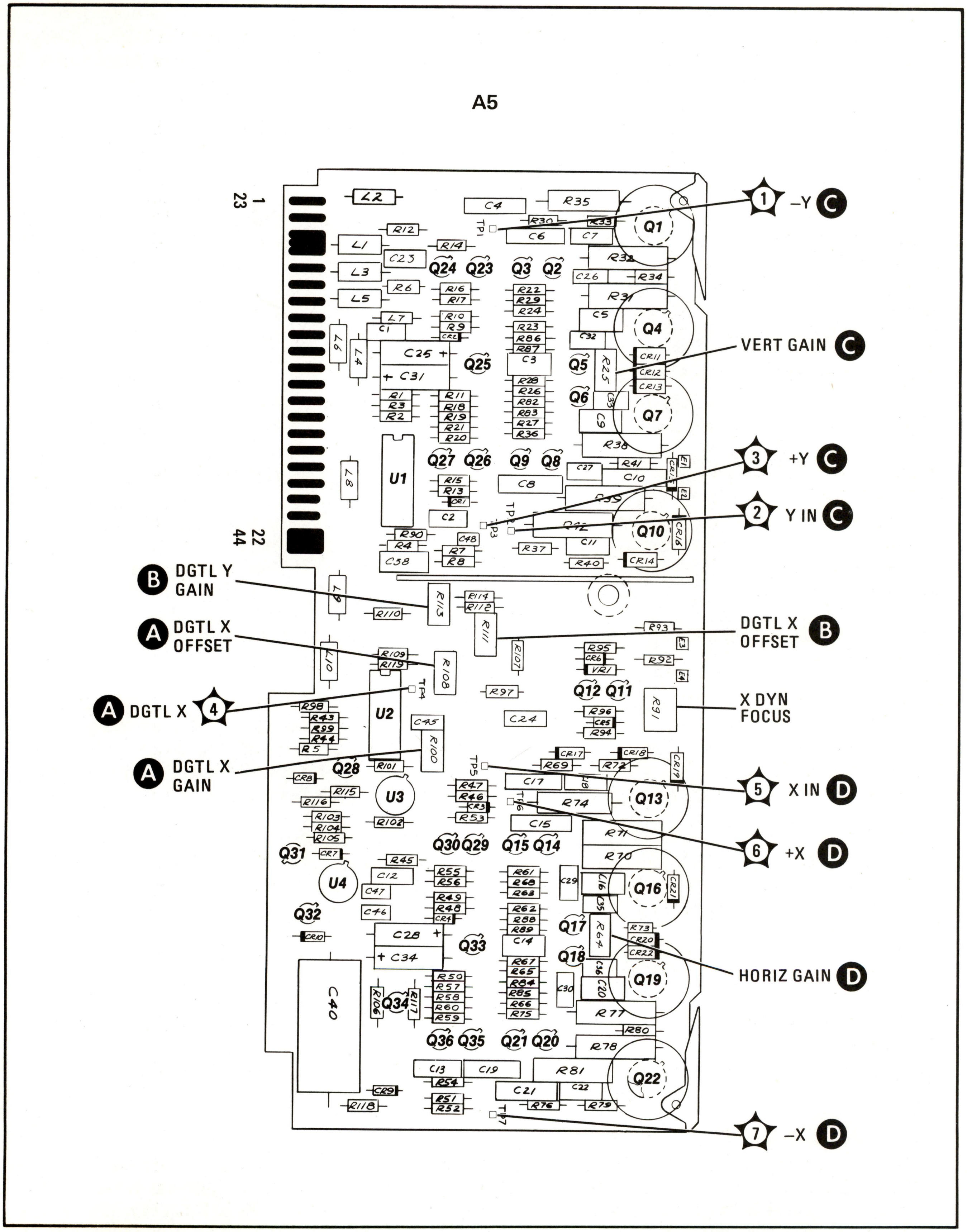

Figure 8-17. A5 X-Y Amplifier Assembly, Component Locations

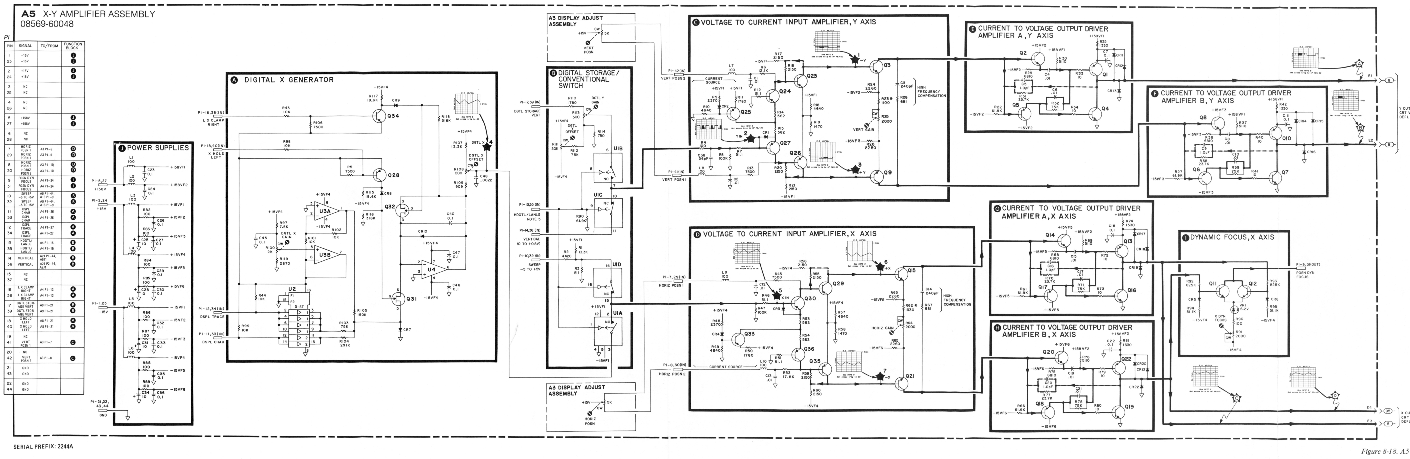

NOTES

1. REFERENCE DESIGNATORS WITHIN THIS ASSEMBLY ARE ABBREVIATED. FOR COMPLETE REFERENCE DESIGNATION, PREFIX ABBREVIATION WITH ASSEMBLY DESIGNATION.
2. UNLESS OTHERWISE INDICATED:
   RESISTANCE IS IN OHMS (Ω)
   CAPACITANCE IS IN PICOFARADS (PF)
   INDUCTANCE IS IN MICROHENRIES (μH)
3. THERE ARE GUARD RING TRACES ON THE PC BOARD WHICH ARE NOT SHOWN ON THE SCHEMATIC. THESE TRACES GUARD SENSITIVE CIRCUIT POINTS FROM LEAKAGE CURRENTS.
4. MNEMONIC TABLE

MNEMONIC	DEFINITION
POSN DYN FOCUS	MAINTAINS SHARP FOCUS AS X INPUT IS SWEPT.

5. 0V = ANALOG
   +5V = DIGITAL STORAGE
6. TEST POINT WAVEFORMS ASSUME THE FOLLOWING SETTINGS:
   GREEN (NORMAL) SETTINGS
   FREQ SPAN/DIV: 1 MHz
   FREQUENCY BAND: .01–1.8 GHz
   FREQUENCY: 0.100 GHz
   REFERENCE LEVEL: –10 dBm
   INPUT ATTEN: 10 dB

A5

Figure 8-18. A5 X-Y Amplifier Assembly, Schematic Diagram

A6 HIGH VOLTAGE POWER SUPPLY ASSEMBLY, CIRCUIT DESCRIPTION

WARNING

Hazardous voltages are present in this assembly.

A6 High Voltage Power Supply Assembly provides operating potentials for the cathode-ray tube (CRT). The nominal potentials are:

- Cathode, −2350 Vdc
- Control grid, −2400 Vdc
- Post accelerator (from High Voltage Quadrupler), +9000 Vdc
- Focus grid, −1525 Vdc
- Filament, 5.9 Vac floating at −2350 Vdc

+26V Filter (A)

This circuit serves two purposes:

- Filtering by L1, L2, C1, and C2 reduces the level of the 40-kHz ripple (from the high-voltage oscillator) that is present in the power supply.

- Filtering by R1, C3, and the Darlington pair Q2 and Q3 removes the 120-Hz ripple on the +26V UNREG supply line before it is applied to the primary of the high-voltage transformer A1T1, thus reducing line-related intensity modulation.

Oscillator Driver (B)

The collector of Q1 is connected to the primary winding of high-voltage transformer A1T1, and a feedback winding is connected to the base of Q1. Positive feedback from this winding causes the circuit to oscillate at a frequency (approximately 40 to 45 kHz) determined primarily by the characteristics of A1T1. Q1 operates as a Class C amplifier, supplying a current of about 2A peak over a conduction period of less than one-half cycle.

Oscillator Bias Current Regulator (C)

Amplifier U1 regulates the dc level of the CRT cathode voltage by controlling the base drive to Q1 through the feedback winding. The cathode voltage is sampled via current through the Feedback circuit, which is compared with a reference current through R3 and R4 at U1 pin 3. The output of U1 drives the base of Q1 at the level (set by HV potentiometer R4) necessary to maintain about −2450 Vdc at the cathode of the CRT. Note that U1 does not switch at the 40-kHz rate. It controls the average bias current for the base of Q1, which controls its conduction period.

High Voltage Transformer (D)

WARNING

The CRT filament potential is connected to the hazardous cathode potential of −2350 Vdc. Measurement of the filament voltage is not recommended, as most voltmeters are not rated to withstand a floating input of this magnitude.

Transformer A1T1 and transistor Q1 form an oscillator circuit whose power is provided by the +26V UNREG line. The primary winding is connected to the collector of Q1, and the feedback winding is connected to the base of Q1. A1T1 has two secondary windings: one supplies high voltage and the other, a filament voltage of 5.9 Vac to the CRT.

The high-voltage winding of A1T1 is tapped to provide a sine wave for the level shifters. The winding is also tapped at another point that is connected to the high-voltage quadrupler, in which the voltage is quadrupled, rectified, and filtered. The resulting +9000 Vdc is applied to the post accelerator of the CRT. The full output of the secondary is rectified by A1CR1 and applied to the High Voltage Filter.

High Voltage Filter (E) and Feedback (F)

The components C9, C10, and R13 filter out the 40-kHz ripple on the rectified high voltage from A6A1 High Voltage Transformer. The output of the filter is a nominal −2350 Vdc whose value is set by HV potentiometer R4 to the value marked on A1T1. This sets the CRT filament voltage to 5.9 Vac, the potential required for maximum CRT life. The output of −2350 Vdc goes directly to the cathode of the CRT and floats the filament at the same potential via R12. The CONT GRID and FOCUS GRID voltages are derived from this voltage. Feedback current for the Oscillator Bias Current Regulator is provided through R14 and C12.

Control Grid Level Shifter (G)

WARNING

Turn power off before connecting or disconnecting a test probe. TP5 in this block is located near high voltage.

The CONT GRID voltage is referenced to the CATH voltage with an intensity control bias developed by means of a level shift circuit. This bias voltage is generated by a sine-wave signal, from a tap on a secondary winding of A1T1, that is coupled through A1C1. The top and bottom of the sine wave are clipped, with the top being clipped by diode CR8. The upper clipping level is set by INT LIM potentiometer R18. The bottom of the sine wave is clipped by the action of diode CR11. The lower clipping level is set by the CONTROL GATE voltage from A4 Z Axis Assembly. The clipped sine wave is coupled through C14 to the rectifier circuit CR9 and CR10 to generate a dc bias voltage across R21. The dc level established is negative with respect to the cathode and is applied to the CRT control grid. Capacitor C15 removes 40-kHz ripple from the bias voltage and allows fast pulse signals to be coupled directly to the control grid. Neon tubes VR3 and VR4 go into conduction if the cathode-to-grid potential is greater than about 180 Vdc. This provides protection to the CRT and associated circuitry, especially during instrument turn-off. Spark gaps are provided to protect components from possible arcing between electrodes in the CRT.

With the CONTROL GATE input at the maximum level of +70 Vdc, the maximum clipping of the bottom of the sine wave occurs. This results in the smallest peak-to-peak swing of the sine wave, since the upper clipping level is held constant by the intensity limit divider network. The rectified and clipped sine wave is then at its minimum dc value, providing the minimum reverse bias of the control grid with respect to the cathode voltage. This provides maximum CRT intensity.

CAUTION

Misadjustment of INT LIM potentiometer R18 can permanently damage the CRT, in as little as 10 seconds, by allowing the grid-to-cathode to be forward biased.

INT LIM potentiometer R18 is set so that a +30 Vdc level at the CONTROL GATE input corresponds to the CRT beam cutoff point. The maximum CONTROL GATE voltage is +70 Vdc at maximum intensity.

At this maximum level of 40 Vdc above cutoff, the control grid is still reverse-biased by 20 Vdc to 50 Vdc, depending on the CRT.

The control grid must not be allowed to go positive with respect to the cathode. If this should happen, permanent damage to the CRT (a hollow cathode) can occur in as little as 10 seconds. The symptom of a hollow cathode is that increasing the front-panel INTENSITY control at some point causes the CRT intensity to diminish rather than to continue increasing.

Zener diode VR5 protects the CRT cathode from any excessive voltage on the CONTROL GATE line that might result from a failure or misadjustment in A4 Z Axis Assembly. It has a voltage limit of 75 Vdc, which, even in the worst case, results in a grid-to-cathode reverse bias of 10 Vdc.

The CONTROL GATE level, and hence the CRT intensity, is a function of the front-panel INTENSITY control. In digital storage modes, this level is modulated by the trace stroke length and by the type of information being refreshed in the display; i.e., traces, characters, and graticule illumination.

Focus Grid Level Shifter (H)

WARNING

Turn power off before connecting or disconnecting a test probe. TP6 in this block is located near high voltage.

The FOCUS GRID voltage is set by a resistor divider string (R28, R29, R30, and front-panel FOCUS control) from the cathode with a dynamic focus correction bias developed by means of a level shift circuit. Zener diodes VR6 and VR7 clamp the FOCUS line voltage to +300 Vdc if the line should be opened. The wiper of FOCUS LIMIT potentiometer R29 is filtered by C18. The focus grid is a little more negative than this because of the bias voltage developed by the level shift circuit. This bias voltage is generated by a sine-wave signal from a tap on a secondary winding of A1T1. The signal is coupled through A1C2. The top and bottom of the sine wave are clipped, with the top being clipped by diode CR12. The upper clipping level is set at a fixed voltage by VR8. The bottom of the sine wave is clipped by the action of CR15. The lower clipping level is set by the FOCUS GATE voltage from A4 Z Axis Assembly. The clipped sine wave is coupled through C19 to the rectifier circuit CR13 and CR14 to generate a dc voltage across R33. Capacitor C20 removes 40-kHz ripple from the bias voltage and also allows fast pulse signals to be coupled directly to the focus grid.

The FOCUS GRID signal provides dynamic focus correction to compensate for defocusing caused by changes in trace position and CONTROL GRID level. The CONTROL GRID level is itself dynamically changed as a function of trace stroke length. During the time the graticule illumination raster is being refreshed on the CRT, the FOCUS line is pulled to ground, defocusing the trace to give even background illumination.

Spark gaps are provided to protect components from possible arcing between electrodes of the CRT.

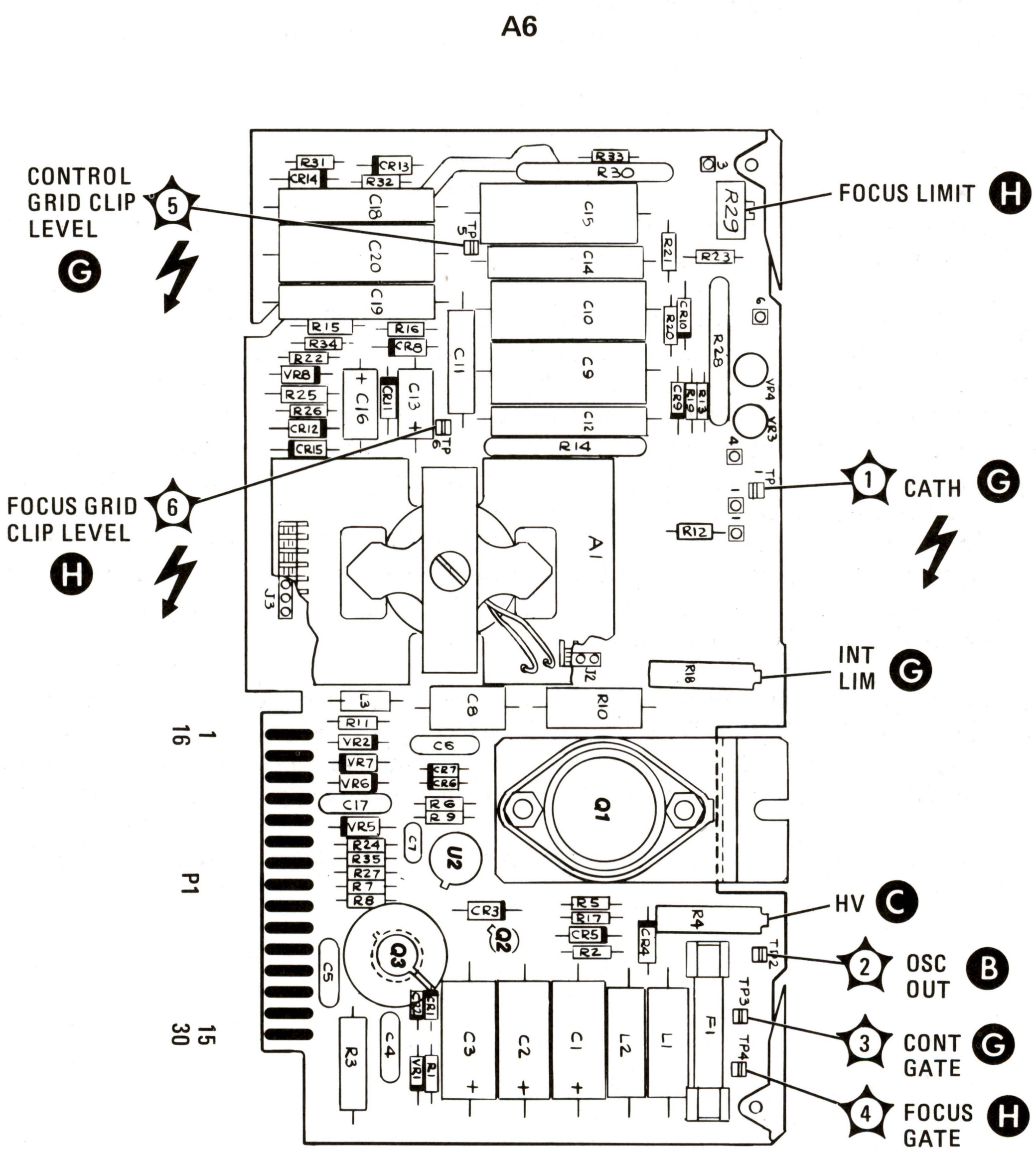

Figure 8-19. A6 High Voltage Power Supply Assembly, Component Locations

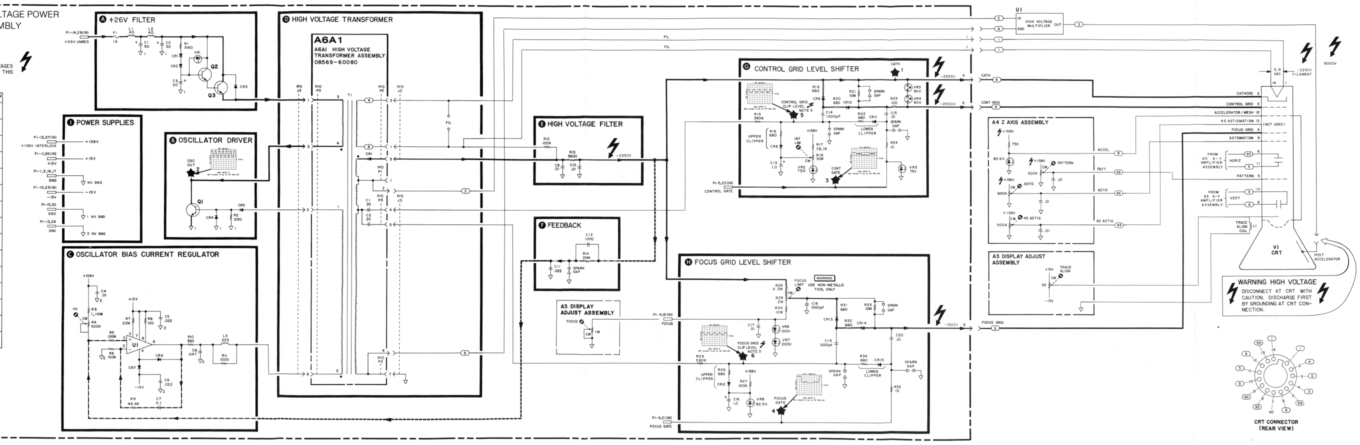

P1

PIN	SIGNAL	TO/FROM	FUNCTION BLOCK
1	GND		I
16	GND		I
2	GND		F
17	GND		I
3	NC		
18	NC		
4	FOCUS	A3P1-11	H
19	FOCUS	A3P1-11	H
5	CONTROL GATE	A4P2-44	G
20	CONTROL GATE	A4P2-44	G
6	FOCUS GATE	A4P2-22	H
21	FOCUS GATE	A4P2-22	H
7	NC		
22	NC		
8	NC		
23	NC		
9	NC		
24	NC		
10	-15V		I
25	-15V		I
11	+15V		I
26	+15V		I
12	+158V INTERLOCK	A4P2-25	I
27	+158V INTERLOCK	A4P2-25	I
13	GND		I
28	GND		I
14	+26V UNREG		A
29	+26V UNREG		A
15	GND		I
30	GND		I

NOTES

1. REFERENCE DESIGNATORS WITHIN THIS ASSEMBLY ARE ABBREVIATED. FOR COMPLETE DESIGNATOR, PREFIX WITH ASSEMBLY REFERENCE DESIGNATOR.
2. UNLESS OTHERWISE INDICATED:
   RESISTANCE IN OHMS (Ω).
   CAPACITANCE IN MICROFARADS (μF).
   INDUCTANCE IN MICROHENRIES (μH).
3. **WARNING**
   TURN POWER OFF BEFORE CONNECTING OR DISCONNECTING PROBE. TEST POINT IS NEAR HIGH VOLTAGE.
4. MNEMONIC TABLE

MNEMONIC	DEFINITION
CONTROL GATE	CONTROLS INTENSITY OF CRT BEAM
FOCUS	FRONT-PANEL FOCUS CONTROL
FOCUS GATE	CONTROLS DYNAMIC FOCUS OF CRT BEAM

5. TEST POINT WAVEFORMS ASSUME THE FOLLOWING SETTINGS:
   GREEN (NORMAL) SETTINGS
   FREQ SPAN/DIV: 1 MHz
   FREQUENCY BAND: .01–1.8 GHz
   FREQUENCY: 0.100 GHz
   REFERENCE LEVEL: –10 dBm
   INPUT ATTEN: 10 dB

A6

Figure 8-20. A6 High Voltage Power Supply Assembly, Schematic Diagram

A7 INPUT/OUTPUT ASSEMBLY

A7 Input/Output Assembly consists of 12 interface circuits that input data indicating the control settings of the instrument, an HP-IB interface, and control latches that allow the CPU to control various display functions. A summary of microprocessor addresses is provided in Table 8-2.

I/O Decoder Ⓐ

The I/O Decoder accepts the I/O SEL line and address lines A0 – A5 to generate 16 enable signals, each of which corresponds to one address location. Twelve of these signals go to interfaces located in A7. The remaining four are used in A9 Data Converter Assembly: two to acquire data from the ADC (Analog to Digital Converter), one to acquire the status of the ADC, and one to acquire the status of the instrument sweep. The data corresponding to these four lines is accessed by the CPU at locations $00 to $03.

In addition, three other outputs are generated, each of which enables a block of 16 address locations. These outputs enable the Center Frequency Interface, the Control Latches, and the HP-IB Interface.

Control Latches Ⓑ

The Control Latches, U36, provide the means for the central processing unit (CPU) in A8 Microprocessor Assembly to manipulate certain parts of the instrument circuitry. The latches occupy 16 locations in the CPU address space ($20 to $2F). Address lines A1 – A3 specify which one of the eight latches is accessed, and A0 determines whether the latch is set or cleared. The data bus does not affect the state of the latches. The function of each of the eight latches is as follows:

The first latch (no name) allows the CPU to start or reset a sweep for the instrument (output low), just as the front-panel START/RESET push button does.

The REQ CONV latch is used to request that the ADC (in A9) start converting an analog value to a digital word. When the REQ CONV output is high, three separate events occur: the Track and Hold circuit (in A9) holds the analog signal at a fixed level for the ADC; the ADC begins the conversion process; and the Peak Detector (in A9) is reset.

The MEM PAGE SEL latch allows the CPU to select which page of STROKE MEMORY is accessed. Each stored trace requires two pages of memory (blocks of 256 bytes), corresponding to the left (output high) and right (output low) halves of the screen.

The SMPL/PEAK latch enables the analog switch, which either passes the analog VERTICAL signal straight to the ADC in A9 (output high) or sends the signal first through the Peak Detector in A9 and then to the ADC (output low).

The X CONV latch enables the analog switch, which connects the ADC to either the analog VERTICAL signal (output low) or the SWEEP – 5 to + 5V (output high).

When the ANLG FAST SWP EN latch output is high, the display goes into the mixed mode, in which digitally generated characters and graticule illumination are displayed in conjunction with the analog signal. To accomplish this, the Counter in A8 is made to stop counting while waiting for the start of an analog sweep, to resume counting when the sweep begins, and to stop again at the end of the Trace B time slot while waiting for the analog sweep to finish. (Refer to the circuit description of A8 Microprocessor Assembly.)

The high state of the SWP TIME LIMIT latch output reduces the fastest sweep time achievable by the AUTO sweep circuit in A16 Sweep Generator Assembly. This function is invoked by the CPU when complex display functions are used that require more computation time and thus a slower sweep speed.

Center Frequency Interface Ⓒ

The Center Frequency Interface allows the CPU to access the BCD digits on the front-panel FREQUENCY GHz readout. Since this LED display is scanned a digit at a time and the CPU might need to access any digit at

Table 8-2. Microprocessor Addresses (1 of 2)

CPU Address	Function
	General I/O Interfaces
$0	Analog-to-Digital Converter (Low Byte)
$1	Analog-to-Digital Converter (High Byte)
$2	Analog-to-Digital Converter Status
$3	Instrument Sweep Status
$4	Display Pushbuttons, Write Control
$5	Display Pushbuttons, Store Control
$6	HP-IB Address Switch
$7	Option Control Jumpers
$8	Bandwidth Switch
$9	IF Gain Switch (Reference Level)
$A	Fine Gain Control (Reference Level)
$B	Input Attenuator Switch
$C	Amplitude Scale Pushbutton Switch
$D	Sweep Time Switch
$E	Frequency Span Switch
$F	Video Filter Switch
	Center Frequency Interface
$10	0.1 MHz Digit
$11	1 MHz Digit
$12	10 MHz Digit
$13	100 MHz Digit
$14	1 GHz Digit
$15	10 GHz Digit
$16–$1F	Not used
	Control Latch Interface
$20	Trigger Sweep Start/Reset Function
$21	Arm the Sweep Start/Reset Function
$22	End Request Conversion Pulse
$23	Start Request Conversion Pulse
$24	Select Low Page (Right Half) of Stroke Memory
$25	Select High Page (Left Half) of Stroke Memory
$26	Turn Peak Detector Function On
$27	Turn Peak Detector Function Off
$28	Connect ADC Input to Y Signal (Vertical)
$29	Connect ADC Input to X Signal (Sweep –5 to +5V)
$2A	Disable Analog Fast Sweep Function
$2B	Enable Analog Fast Sweep Function
$2C	Set Sweep Time Limit to Shorter Sweep Time
$2D	Set Sweep Time Limit to Longer Sweep Time
$2E	Turn Manual Sweep Marker On
$2F	Turn Manual Sweep Marker Off

Table 8-2. Microprocessor Addresses (2 of 2)

CPU Address	Function
	HP-IB Registers
$30	HP-IB Data Register
$31	Interrupt Status Register for Incoming Data
$32	Interrupt Status Register for Bus Handshake
$33	Not used
$34	HP-IB Address Status Register
$35	Not used
$36	HP-IB Switch Selected Address Register
$37–$7F	Not used
	System Memory
$80–$BF	Character Buffer for Upper Printed Line On Display
$C0–$FF	Scratchpad Memory for CPU
$100–$17F	Not used
$180–$1BF	Character Buffer for Lower Printed Line On Display
$1C0–$1FF	Scratchpad Memory and Machine Stack for CPU
	Stroke Memory
$200–$2FF	Blanking Data for Trace B
$300–$3FF	Blanking Data for Trace A
$400–$4FF	Stroke Data for Trace B (High Byte)
$500–$5FF	Stroke Data for Trace A (High Byte)
$600–$6FF	Stroke Data for Trace B (Low Byte)
$700–$7FF	Stroke Data for Trace A (Low Byte)
$800–$1FFF	Not used
	Program Memory (ROM)
$2000–$27FF	HP-IB and Plot Subroutines
$2800–$2FFF	Control Setting Display Subroutines
$3000–$37FF	Executive Program and Trace Data Handling
$3800–$3FFF	Initialization and Test Subroutines

any time, a means of storing the digit data is provided. U3 and U4 are a memory for eight BCD digits with independent read and write addresses. The inputs come from A11 DVM Digital Assembly. The four binary-coded decimal (BCD) data lines CF1, CF2, CF4, and CF8, are the data input for the memory; the three digital select lines CFX, CFY, and CFZ provide the address at which the data is stored, and CF CK is used as the data strobe. The CPU in A8 Microprocessor Assembly accesses the data on lines D8 – D11 while using address lines A0 – A2 to select the digit to be read. Of the 16 locations allocated for this interface, only 6 locations ($10 to $16) are defined; one for each of the 6 center-frequency digits.

Frequency Span Interface (D)

There are nine input lines to the Frequency Span Interface. All but two swing from approximately + 15V to – 14V. FULL and MULTIBAND swing from + 15V to – 39V. Four of the inputs are reduced to TTL levels by series resistors, diodes, and pull-down resistors. Another two lines have resistor dividers to reduce the inputs to 5-volt CMOS levels. The ZERO, FULL and MULTIBAND lines are ORed by means of diodes and then reduced to 5-volt CMOS levels by a resistor divider referenced to ground. All the inputs are combined by diodes and gates to yield six lines. These last six lines go to U14, which is accessed by the CPU at address $0E.

Sweep Time Interface (E)

There are six main inputs to the Sweep Time Interface from Sweep Generator Assembly A16 that swing between ground and a temperature-variable + 10V level. The inputs are buffered with 100K ohm resistors to prevent cross talk of digital noise from Input/Output Assembly A7. CMOS inverters form high input impedance operating at a + 10V level; their outputs are resistively divided down to TTL levels. The MAN/SWP (manual sweep) line is a switch closure to ground that is pulled up with R31 to a + 5V CMOS level. The EXT/MAN SWP (external/manual sweep) line swings from ground to approximately + 12V. It is reduced to about + 10V to drive the enable input of U2. All these inputs are reduced to six lines to U16, which is accessed by the CPU at address $0D.

Video Filter Interface (F)

The six video filter lines swing from ground to + 15V and are reduced to TTL levels by resistors and diodes. These six lines go to parts of U30, U28, and U26, which are simultaneously accessed by the CPU at address $0F.

Log Scale Interface (G)

Three of the inputs to the Log Scale Interface switch between + 15V and – 3.5V, and the fourth (LOG/LIN) swings between + 15V and a temperature-variable – 8V level. These levels are reduced to TTL levels by resistors and diodes and go to part of U28, which is accessed by the CPU at address $0C.

Input Attenuator Interface (H)

The inputs to the Input Attenuator Interface swing between ground and approximately + 28V. These levels are reduced to TTL levels by resistor dividers and go to part of U26, which is accessed by the CPU at address $0B.

Fine Gain Interface (I)

The inputs to the Fine Gain Interface are switch closures to ground and are pulled up with resistors to yield TTL levels. These inputs go to part of U30, which is accessed by the CPU at address $0A.

IF Gain Interface (J)

The IF Gain Interface has two types of inputs. IFG1, IFG2, and IFG3 swing between ground and a temperature-variable + 10V level. These three lines go directly into CMOS inverters operating at the + 10V level, the outputs of which are resistively divided down to TTL levels. IFG4, IFG5, and IFG6 have three possible input levels. These are reduced to + 5V CMOS levels by resistors going to U10. When one of these inputs is approximately at ground potential, the output of the corresponding gate is low. When the input assumes either a high

level of approximately +15V or a low level of approximately −10V, the output of the gate goes high. These six lines go to U12, which is accessed by the CPU at address $09.

Bandwidth Interface Ⓚ

The six inputs to the Bandwidth Interface swing from approximately +15V to −3.5V. These levels are translated to TTL levels by resistors and diodes and sent to U20, which is accessed by the CPU at address $08.

Option Status Interface Ⓛ

Four of the inputs to the Option Status Interface come from J2, which is used to set the instrument options that are controlled by A8 Microprocessor Assembly. The inputs are pulled up with resistors, but may be grounded with the jumpers provided in J2 to select the options specified for a particular instrument.

The dpc line from A11 DVM Digital Assembly is also input to this interface so that the CPU can determine the position of the decimal point in the FREQUENCY GHz display.

The sixth input to the Option Status Interface indicates the status of the START/RESET line used by the sweep circuitry of the instrument. The state of the START/RESET line may be established either by the CPU in A8, via a latch in the Control Latches circuit of A7, or by the instrument-sweep START/RESET push button. All six of these inputs are accessed by the CPU at address $07.

Store Control Switch Ⓜ

The Store Control Switch interface accepts seven inputs from the push button switches that control the CRT display. These inputs are contact closure to ground, so pull-up resistors are used to yield TTL input levels. The eighth input is the CF SIGN from A11 DVM Digital Assembly, which is used by the CPU to establish the sign of the center frequency. These eight inputs go to U22, which is accessed by the CPU at address $05.

Write Control Switch Ⓝ

The Write Control Switch interface accepts eight lines from the push button switches that control the CRT display. These inputs are contact closure to ground, so pull-up resistors are used to yield TTL input levels. These eight inputs go to U23, which is accessed by the CPU at address $04.

HP-IB Interface Ⓞ

The HP-IB Interface consists of U31, which handles all HP-IB hardware functions; two buffers, U32 and U39, to drive the HP-IB connector; and an interface, U8, to read the HP-IB address switch.

U31 is a microprocessor-controlled device that handles all the talk and listen functions that occur during HP-IB operation. Whenever the CPU on A8 needs to receive or send information via HP-IB it accesses U31, which appears at a block of 16 addresses starting at $30. U32 then properly formats the data and handles the actual HP-IB transaction through buffers U32 and U39. U32 handles the eight HP-IB control lines, while U39 handles the eight HP-IB data lines.

The rear-panel HP-IB address switch provides contact closures to ground; these are translated to TTL levels with pull-up resistors. Five lines are sent to U8, which is accessed by the CPU at address $06.

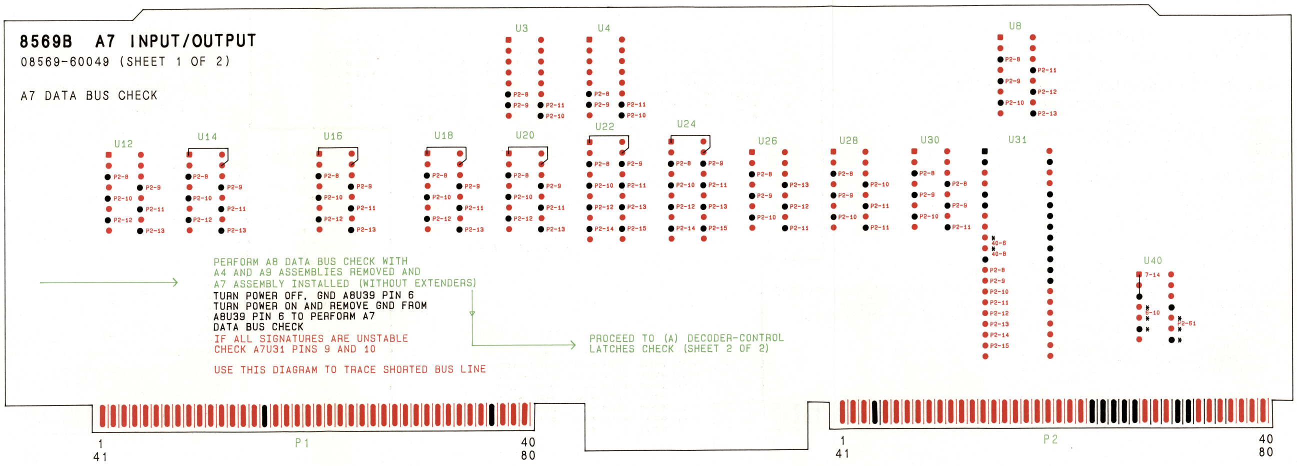

Figure 8-21. A7 Input/Output Signature Analysis and Troubleshooting Diagram (1 of 2)

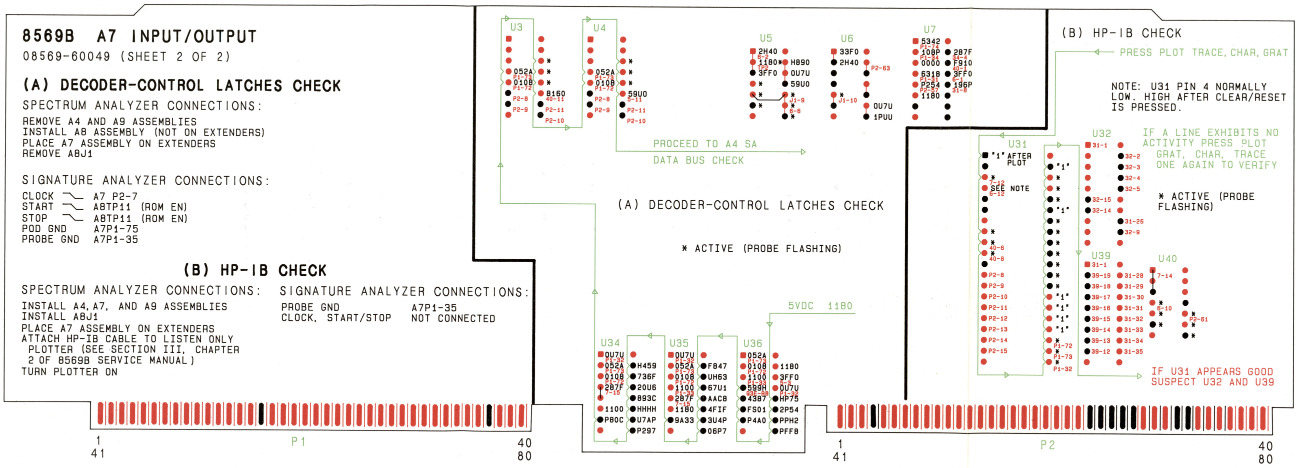

Figure 8-21. A7 Input/Output Signature Analysis and Troubleshooting Diagram (2 of 2)

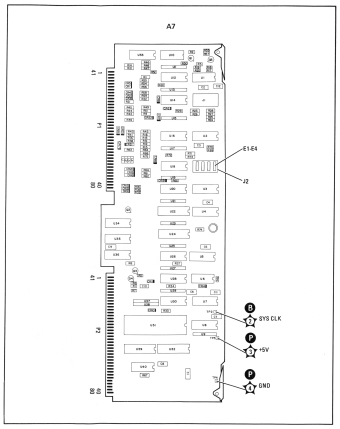

Figure 8-22. A7 Input/Output Assembly, Component Locations

FREQUENCY SPAN/DIV

SETTING (Hz)	LINE FS ÷ 100	FS ÷ 10	NAR-ROW	FS ÷ 2	FS ÷ 4	MULTI-BAND	FULL	FS X 2.5	ZERO
1K	H	H	H	H	L	LL	LL	L	L
2K	H	H	H	L	L	LL	LL	L	L
5K	H	L	H	L	H	LL	LL	L	L
10K	H	L	H	H	L	LL	LL	L	L
20K	H	L	H	L	L	LL	LL	L	L
50K	L	H	H	L	H	LL	LL	L	L
100K	L	H	H	H	L	LL	LL	L	L
200K	L	H	H	L	L	LL	LL	L	L
500K	L	L	H	L	H	LL	LL	L	L
1M	L	L	H	H	L	LL	LL	L	L
2M	L	L	H	L	L	LL	LL	L	L
5M	L	H	L	L	H	LL	LL	L	L
10M	L	H	L	H	L	LL	LL	L	L
20M	L	H	L	L	L	LL	LL	L	L
50M	L	L	L	L	H	LL	LL	L	LL
100M	L	L	L	H	L	LL	LL	L	L
200M	L	L	L	L	L	LL	LL	L	L
500M	L	L	L	L	L	LL	LL	H	L
F	L	L	L	L	L	LL	H	L	L
FULL	L	L	L	L	L	LL	H	L	L
1.7–22 GHz	L	L	L	L	L	H	LL	L	L
ZERO	H	X	H	X	X	X	X	X	H

H ≃ +15V　　L ≃ −14V
LL ≃ −39V　　X = EITHER STATE

REF LEVEL FINE

SETTING	LINE G 3	2	1	Ø
0	▽		▽	▽
−1	▽	▽	▽	H
−2	▽	▽	H	H
−3	▽	▽	H	▽
−4	▽	H	H	▽
−5	▽	H	H	H
−6	▽	H	▽	H
−7	▽	H	▽	▽
−8	H	H	▽	▽
−9	H	H	▽	H
−10	H	H	H	H
−11	H	H	H	▽
−12	H	▽	H	▽

H ≃ +5V
▽ ≃ GND

RESOLUTION BANDWIDTH

SETTING (Hz)	LINE BW 1	2	4	Ø	8	9
1K	H	L	L	L	H	L
1K	H	L	L	L	L	H
1K	H	L	L	L	L	L
3K	L	H	L	L	L	L
10K	L	L	L	L	L	L
30K	L	L	H	L	L	L
100K	H	L	L	H	L	L
300K	L	H	L	H	L	L
1M	L	L	L	H	L	L
3M	L	L	H	H	L	L

H ≃ +15V　　L ≃ −3.5V

REF LEVEL

SETTING*	LINE IFG 1	2	3	4	5	6
0 dB	H	H	H	▽	▽	▽
−10 dB	▽	H	H	▽	▽	▽
−20 dB	H	▽	H	▽	▽	▽
−30 dB	▽	▽	H	▽	▽	▽
−40 dB	H	▽	▽	▽	▽	▽
−50 dB	▽	▽	▽	▽	▽	▽
−60 dB	▽	▽	▽	H/L	▽	▽
−70 dB	▽	▽	▽	H/L	H/L	▽
−80 dB	▽	▽	▽	H/L		H/L
−90 dB	▽	▽	▽	H/L	H/L	H/L

H ≃ +10V　　▽ ≃ GND
H/L ≃ EITHER +15V OR −10V
* WITH INPUT ATTEN AT **10 dB**

AMPLITUDE SCALE

SETTING	LINE 10 dB/DIV	5 dB/DIV	2 dB/DIV	LOG/LIN
10 dB/	H	L	L	H
5 dB/	L	H	L	H
2 dB/	L	L	H	H
1 dB/	L	L	L	H
LIN	L	L	L	LL

H ≃ +15V
L ≃ −3.5V
LL ≃ −10V

INPUT ATTEN

SETTING	LINE 1ØA1	2ØA2	2ØA3	2ØA4
0 dB	H	H	H	H
10 dB	▽	H	H	H
20 dB	H	▽	H	H
30 dB	▽	▽	H	H
40 dB	H	▽	▽	H
50 dB	▽	▽	▽	H
60 dB	H	▽	▽	▽
70 dB	▽	▽	▽	▽

H ≃ +28V　　▽ ≃ GND

VIDEO FILTER

SETTING	LINE VID FIL OFF	.3X	.1X	.03X	.01X	.003X	NOISE AVG
OFF	H	L	L	L	L	L	L
.3X	L	H	L	L	L	L	L
.1X	L	L	H	L	L	L	L
.03X	L	L	L	H	L	L	L
.01X	L	L	L	L	H	L	L
.003X	L	L	L	L	L	H	L
NOISE AVG	L	L	L	L	L	L	H

H ≅ +15V　　L ≅ −15V

SWEEP TIME/DIV

SETTING (SEC)	LINE ST CAL	ST FAST	ST X100	ST X10	ST X5	ST X2	MAN SWP	EXT/MAN SWP
10	▽	H	H	H	H	H	▽	▽
5	▽	H	H	H	H	▽	▽	▽
2	▽	H	H	H	▽	H	▽	▽
1	▽	H	H	▽	H	H	▽	▽
.5		H	H	▽	H	▽	▽	▽
.2	▽	H	H	▽	▽	H	▽	▽
.1	▽	H	▽	H	H	H	▽	▽
50m	▽	H	▽	H	H	▽	▽	▽
20m	▽	H	▽	H	▽	H	▽	▽
10m	▽	H	▽	▽	H	H	▽	▽
5m	▽	H	▽	▽	H	▽	▽	▽
2m	▽	H	▽	▽	▽	H	▽	▽
1m	▽	▽	H	▽	H	H	▽	▽
.5m	▽	▽	H	▽	H	▽	▽	▽
.2m	▽	▽	H	▽	▽	H	▽	▽
.1m	▽	▽	▽	H	H	H	▽	▽
50µ	▽	▽	▽	H	H	▽	▽	▽
20µ			▽	H	▽	H	▽	▽
10µ	▽	▽	▽	▽	H	H	▽	▽
5µ	▽	▽	▽	▽	H	▽	▽	▽
2µ	▽	▽	▽	▽	▽	H	▽	▽
AUTO	H	H	H	H	H	H	▽	▽
EXT	X	X	X	X	X	X	▽	HH
MAN	X	X	X	X	X	X	+5V	HH

H ≃ +10V　　▽ ≃ GND
HH ≃ +12V　　X = EITHER STATE

A7 INPUT/OUTPUT ASSEMBLY
08569-60049 (SHEET 1 OF 3)

P1

PIN	SIGNAL	TO/FROM	FUNCTION BLOCK
1	INP-B→A	A1A1J1-15	N
41		A1A1J1-18	NOT USED
2	WRITE A	A1A1J1-13	N
42	NC		
3	STORE BLANK B	A1A1J1-11, A4P2-18	M
43	WRITE B	A1A1J1-16	N
4	PLOT TRACE	A1A1J1-9	M
44	STORE BLANK A	A1A1J1-14, A4P2-42	M
5	STORE VIEW A	A1A1J1-7	N
45	SAMPLE	A1A1J1-12	M
6	DGTL AVG	A1A1J1-5	N
46	PLOT GRAT	A1A1J1-10	M
7	MAX HOLD A	A1A1J1-3	N
47	STORE VIEW B	A1A1J1-8	N
8	NARROW	A2A1J1-1	D
48	PLOT CHAR	A1A1J1-6	M
9	ZERO	A2A1J1-5	D
49	MAX HOLD B	A1A1J1-4	N
10	MULTI-BAND	A2A1J1-9	D
50	CLEAR/RESET	A1A1J1-2, A8P1-18	M
11	FULL	A2A1J1-13	D
51	IFG6	A2A1J1-8	J
12	EXT/MNL SWP	A2A1J1-19, A16P1-38	E
52	IFG5	A2A1J1-10	J
13	20A2	A2A1J1-21	H
53	IFG4	A2A1J1-12	J
14	20A3	A2A1J1-23	H
54	IFG3	A2A1J1-14	J
15	10A1	A2A1J1-27	H
55	IFG2	A2A1J1-16	J
16	NC		
56	IFG1	A2A1J1-18	J
17	2 dB/DIV	A2A1J1-37	G
57	FSX2.5	A2A1J1-20	D
18	5 dB/DIV	A2A1J1-39	G
58	FS÷2	A2A1J1-22	D
19	10 dB/DIV	A2A1J1-41	G
59	FS÷4	A2A1J1-24	D
20	MNL SWP	A2A1J1-43	E
60	FS÷10	A2A1J1-26	D

P1

PIN	SIGNAL	TO/FROM	FUNCTION BLOCK
21	LOG/LIN	A2A1J1-49	G
61	FS÷100	A2A1J1-28	D
22	BW0	A2A1J1-45	K
62	20A4	A2A1J1-36	H
23	STX2	A2A4J1-26	E
63	NC		
24	STX5	A2A4J1-24	E
64	BW4	A2A1J1-47	K
25	STX10	A2A4J1-22	E
65	G3	A2A4J1-21	I
26	STX100	A2A4J1-20	E
66	G2	A2A4J1-19	I
27	ST CAL	A2A4J1-18	E
67	G1	A2A4J1-17	I
28	ST FAST	A2A4J1-16	E
68	G0	A2A4J1-15	I
29	+10 VTV	A2A4J1-14	P
69	BW9	A2A4J1-5	K
30	BW8	A2A4J1-4	K
70	BW1	A2A4J1-3	K
31	I/O SEL	A8P1–5	A
71	BW2	A2A4J1-1	K
32	A0	A8P1–1	A
72	A2	A8P1–2	A
33	A3	A8P1–24	A
73	A1	A8P1–23	A
34	A5	A8P1–42	A
74	A4	A8P1–27	A
35	DGTL GND	(0) A40A2J1-4, 5	P
75	DGTL GND		P
36	DGTL GND	(0) A40A2J1-4, 5	P
76	DGTL GND		P
37	START/RESET	A2A1J2-7, A16P1-43 (938)	B
77	SWP TIME LIMIT	(938) A16P2-5	B
38	VID FIL .03X	(926) S1*	F
78	NOISE AVG	(905) S1*	F
39	VID FIL .01X	(927) S1*	F
79	VID FIL .1X	(925) S1*	F
40	VID FIL OFF	(904) S1*	F
80	VID FIL .3X	(924) S1*	F

*S1 SHOWN ON A21 VIDEO ASSEMBLY SCHEMATIC

P2

PIN	SIGNAL	TO/FROM	FUNCTION BLOCK
1	+15V	(92) A40A2J2-11	P
41	+15V		P
2	−15V	(97) A40A2J2-15	P
42	−15V		P
3	+5.2V	(912) A40A2J1-7, 8	P
43	+5.2V		P
4	ADC HBYTE	A9P1-27	A
44	ADC LBYTE	A9P1-5	A
5	CNT8	NOTE 4	
45	CNT8	NOTE 4	
6	CHAR DOT SHIFT	NOTE 4	
46	CHAR DOT SHIFT	NOTE 4	
7	SYS CLK	A4P2-37,	B
47	SYS CLK	A8P1-8	B
8	D8	A4,A8,A9	O
48	D8	A4,A8,A9	O
9	D9	A4,A8,A9	O
49	D9	A4,A8,A9	O
10	D10	A4,A8,A9	O
50	D10	A4,A8,A9	O
11	D11	A4,A8,A9	O
51	D11	A4,A8,A9	O
12	D12	A4,A8,A9	O
52	D12	A4,A8,A9	O
13	D13	A4,A8,A9	O
53	D13	A4,A8,A9	O
14	D14	A4,A8,A9	O
54	D14	A4,A8,A9	O
15	D15	A4,A8,A9	O
55	D15	A8, A9	O
16	CNT16	NOTE 4	
56	CNT16	NOTE 4	
17	NC		
57	ROM SEL	A4P2-11, A8P1-14	A
18	CNT15	NOTE 4	
58	CNT15	NOTE 4	
19	STROKE SEL	NOTE 4	
59	STROKE SEL	NOTE 4	
20	OVERSWP/EXT BLANK	NOTE 4	
60	OVERSWP/EXT BLANK	NOTE 4	

P2

PIN	SIGNAL	TO/FROM	FUNCTION BLOCK
21	NC		
61	LR/W	A8P1-16	O
22	RETRACE BLANK	NOTE 4	
62	RETRACE BLANK	NOTE 4	
23	NC		O
63	L CPU RESET	A8P1-19	O
24	L MKR EN	A4P1-12	B
64	L MKR EN	A4P1-12	B
25	ANLG FAST SWP EN	A4, A8, A7	B
65	REQ CONV	A9P1-16	B
26	STAT SWP EN	A9P1-17	A
66	STAT SWP EN	A9P1-39	A
27	X CONV	A9P1-41	B
67	MEM PAGE SEL	A9P1-20	B
28	SMPL/PEAK	A9P1-19	B
68	NC		
29	ADR6	NOT USED	O
69	DIO8	(96) A43J1-16	O
30	SRQ	A43J1-10 (90)	O
70	DIO7	(95) A43J1-15	O
31	ATN	A43J1-11 (91)	O
71	DIO6	(94) A43J1-14	O
32	EOI	A43J1-5 (5)	O
72	DIO5	(93) A43J1-13	O
33	DAV	A43J1-6 (6)	O
73	DIO4	(4) A43J1-4	O
34	NRFD	A43J1-7 (7)	O
74	DIO3	(3) A43J1-3	O
35	ADR3	A43W1P1-24 (914)	O
75	DIO2	(2) A43J1-2	O
36	ADR5	A43W1P1-23 (916)	O
76	DIO1	(1) A43J1-1	O
37	ADR2	A43W1P1-22 (913)	O
77	REN	(97) A43J1-17	O
38	ADR4	A43W1P1-20 (915)	O
78	IFC	(9) A43J1-9	O
39	ADR1	A43W1P1-21 (912)	O
79	NDAC	(8) A43J1-8	O
40	HP-IB GND	A43J1-18-24	O
80	HP-IB GND		O

SERIAL PREFIX: 2244A　　**A7**

Figure 8-23. A7 Input/Output Assembly, Schematic Diagram (1 of 3)

A7 INPUT/OUTPUT ASSEMBLY
08569-60049 (SHEET 2 OF 3)

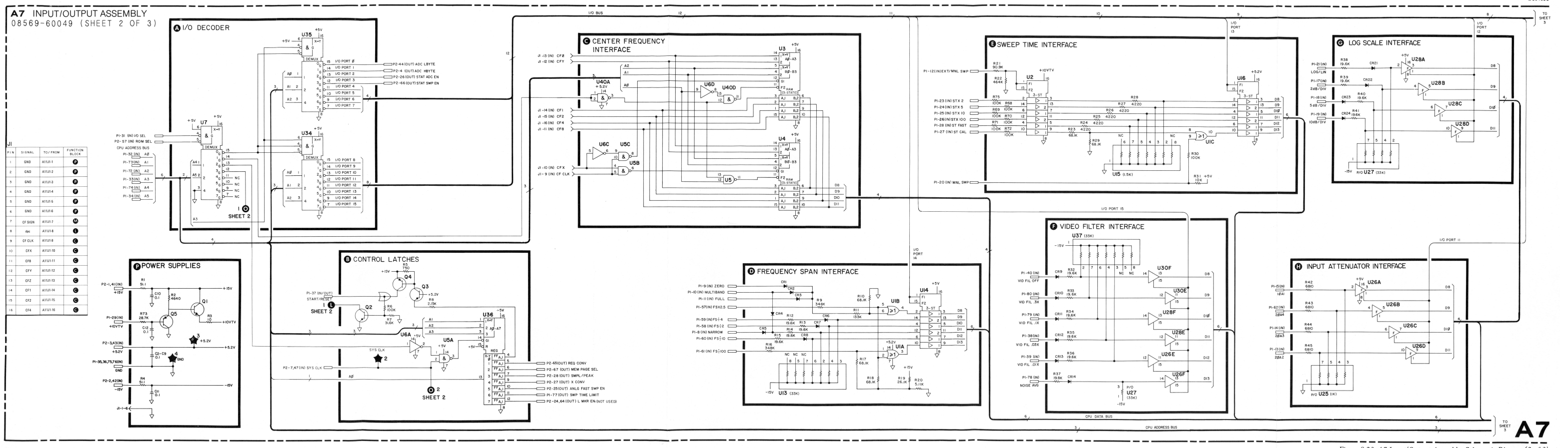

J1

PIN	SIGNAL	TO/FROM	FUNCTION BLOCK
1	GND	A11J1-1	P
2	GND	A11J1-2	P
3	GND	A11J1-3	P
4	GND	A11J1-4	P
5	GND	A11J1-5	P
6	GND	A11J1-6	P
7	CF SIGN	A11J1-7	M
8	dpc	A11J1-8	L
9	CF CLK	A11J1-9	C
10	CFX	A11J1-10	C
11	CF8	A11J1-11	C
12	CFY	A11J1-12	C
13	CFZ	A11J1-13	C
14	CF1	A11J1-14	C
15	CF2	A11J1-15	C
16	CF4	A11J1-16	C

SERIAL PREFIX: 2244A

Figure 8-23. A7 Input/Output Assembly, Schematic Diagram (2 of 3)

A7 INPUT/OUTPUT ASSEMBLY

08569-60049 (SHEET 3 OF 3)

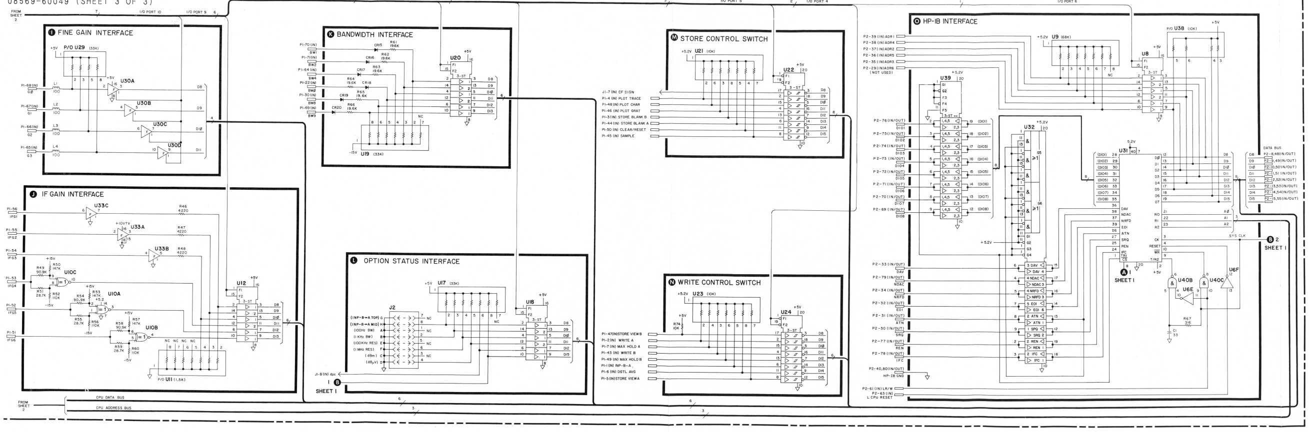

NOTES

1. REFERENCE DESIGNATORS WITHIN THIS ASSEMBLY ARE ABBREVIATED. FOR COMPLETE REFERENCE DESIGNATION, PREFIX ABBREVIATION WITH ASSEMBLY DESIGNATION.
2. UNLESS OTHERWISE INDICATED: RESISTANCE IS IN OHMS (Ω) CAPACITANCE IS IN PICOFARADS (PF) INDUCTANCE IS IN MICROHENRIES (μH)
3. UNUSED GATES:

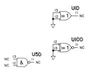

4. NOT USED ON A7.
5. MNEMONIC TABLE:

MNEMONIC	DISCRIPTION
ADC HBYTE	SELECTS EIGHT MOST SIGNIFICANT DATA BITS FROM ANALOG-TO-DIGITAL CONVERTER.
ADC LBYTE	SELECTS TWO LEAST SIGNIFICANT DATA BITS FROM ANALOG-TO-DIGITAL CONVERTER.
ANLG FAST SWP EN	ENABLES ANALOG FAST SWEEP FUNCTION.
D8–D15	CPU DATA BUS
L MKR EN	WHEN LOW, ENABLES ANALOG MARKER IN MANUAL SWEEP MODE.
MEM PAGE SEL	SELECTS STROKE MEMORY PAGE FOR CPU (LEFT OR RIGHT SIDE OF CRT SCREEN).

MNEMONIC	DESCRIPTION
REQ CONV	REQUESTS ANALOG-TO-DIGITAL CONVERSION.
SMPL/PEAK	SELECTS EITHER SAMPLE OR PEAK VALUE FOR ANALOG-TO-DIGITAL CONVERSION.
STAT ADC EN	SELECTS ADC STATUS BUSY LINE AS DATA INPUT.
STAT SWP EN	SELECTS OVERSWP BLANK AND RETRACE LINES AS DATA INPUT.
SWP TIME LIMIT	LIMITS FASTEST SWEEP IN DGTL AVG MODE.
X CONV	SELECTS INSTRUMENT SWEEP VOLTAGE FOR ANALOG-TO-DIGITAL CONVERSION.

A7

Figure 8-23. A7 Input/Output Assembly, Schematic Diagram (3 of 3)

A8 MICROPROCESSOR ASSEMBLY, CIRCUIT DESCRIPTION

A8 Microprocessor Assembly controls the two essential functions performed in the Digital Storage Section: the acquisition of data, controlled by the central processing unit (CPU), and the display of data, controlled by the Counter.

Program ROM Ⓐ

The Program ROM consists of U8, U22, U29, and U36. These contain the program which controls all the digital display and HP-IB functions of the display. Each ROM contains 2048 bytes of data; each byte consists of 8 bits. The specific function of the program in each ROM is as follows:

ROM Number	Reference Designation	Address Range	Contents
1	U8	$2000–$27FF	HP-IB and Plot Subroutines
2	U22	$2800–$2FFF	Control Setting Display Subroutines
3	U29	$3000–$37FF	Executive Program and Trace Data Handling
4	U36	$3800–$3FFF	Test and General Subroutines

Address Decoder Ⓑ

U38A converts the **a11** and **a12** address lines into four select lines: one for each of the Program ROMs. U24A inverts **a13** to generate (not) ROM EN. U37A inverts (not) ROM EN to generate ROM SEL. When ROM SEL is high (address range $2000 – $3FFF) one of the ROMs is enabled. When ROM SEL is low (address range $0000 – $1FFF) either a hardware interface (from A7 Input/Output Assembly), or Stroke Memory or System Memory is selected.

CPU Ⓒ

The heart of the CPU block is microprocessor U1. The outputs from U1 are the address bus, **a0** – **a13**, the read/write line, R/W, and the CPU clock, CPU CLK. The inputs to U1 are the clock oscillator, CK IN, and the reset line, (not) RES. The data bus, **d0** – **d7**, has both input and output functions.

The address bus specifies the hardware or the memory location that is to supply or receive data on the data bus. Memory refers to System Memory, Stroke Memory, or Program ROM (read only memory). Buffers U30A through U30D provide extra drive for address lines **a0** through **a3**. Address lines **a14** and **a15** are not used, which limits the address range to $0000 through $3FFF.

The read/write line, buffered and inverted by U24H, determines the direction of data flow on the data bus. When the LR/W signal at TP3 is high, U1 outputs data on the data bus.

A 12 MHz clock signal is generated by clock oscillator U40. This signal is fed to U16, which is a divide-by-six counter. One output is a non-symmetrical (167 – 333 ns) 2 MHz clock signal that goes to the microprocessor CK IN input; it appears at TP1, slightly delayed, as CPU CLK. U30H provides a buffered CPU CLK signal for the Display Control Logic; U24F provides an inverted CPU CLK signal for the Counter circuit. The CK IN and the buffered CPU CLK signals are ORed together by U42A to generate the Data MUX Enable signal that goes to the Data Multiplexer. This signal is low, disabling the data multiplexers, during the time that addresses are changing or data is invalid.

The CPU CLK signal and the not Carry from U16 are used by J-K flip-flop U41A to generate a nearly symmetrical (210 ns – 290 ns) 2 MHz SYS CLK signal. This clock signal is used by the Character Generator on the Z-Axis (A4) Assembly, by the Control Latches, and by the HP-IB Interface on INPUT/OUTPUT Assembly A7.

The Counter U16 also generates a (not) WR CLK signal used by the R/W Select circuit. The timing of this signal is such that the write pulses to the Stroke Memory and System Memory are present only when data is valid.

U9B and U9A are comparators that generate a reset signal for the microprocessor which is low when power is turned on and remains low until the +5.2V power supply is stable. VR1, R4, R5, and CR1 provide an input to U9B so that its output (pin 2) remains low until the +5.2V supply exceeds about +4V. C1 and R7 provide an additional delay that allows the output of U9A (pin 1) to remain low until supply voltage is stable (another 200 ms). Grounding TP2, L CPU RESET, also generates a valid reset pulse.

U9C, in conjunction with R11 through R14 and C3, generates a trigger pulse for the reset circuit so that the front panel CLEAR/RESET push button also generates a valid reset pulse.

The shorting plug in J1 connects the data bus to external hardware, allowing the data bus to receive instructions from the Program ROM and to transfer data to and from memory and interfaces. When the plug in J1 is removed, U1 continually executes an instruction as determined by R1, R2, R3, and resistor array U2. This causes the microprocessor address bus to appear as a binary counter with **a0** (pin 9) having a 1 μs period, **a1** (pin 10) having a 2 μs period, and so on through **a15** (pin 25), which has a 32.768 ms period. This counting mode facilitates troubleshooting and makes signature analysis possible on the address bus.

Data Multiplexer Ⓓ

The Data Multiplexer circuit converts the 8-bit CPU data bus **d0 – d7** to a 16-bit data bus D0 – D15 that is used by all hardware except the Program ROM. In order to perform the translation from 8 to 16 bits, the CPU accesses the 16-bit bus as one 8-bit byte and two 4-bit nibbles.

16-Bit Designation	Address Range	Data Contents	Translates to 8-Bit
D15–D8	$400–$5FF	8 MSB Stroke Data	D7–D0
D7–D4	$600–$7FF	4 LSB Stroke Data	D7–D4
D3–D0	$200–$3FF	Blanking Info	D7–D4

U39D, U38B, U39B, and U24C are used during a read operation to select the appropriate bus transceiver (U3, U25, or U32) for each of the three address spaces listed above. LR/W from the CPU is used to set the data direction of the transceiver.

R/W Select Ⓔ

The R/W Select circuit generates four read/write signals. Of the four select lines, three go to the three blocks of memory space in Stroke Memory as defined by the Data Multiplexer. The remaining read/write signal goes to System Memory. A low on one of these four R/W lines indicates that data is being written from the CPU to a memory.

I/O Select Ⓕ

The I/O Select circuit generates a low signal to enable the input/output hardware when the CPU access address is below $007F. Further decoding of the I/O space takes place in A7 Input/Output Assembly.

Stroke Select Generator Ⓗ

Stroke Select Generator circuit generates the signal that indicates whether a stroke from an odd or even address is being drawn on the CRT. This STROKE SEL line determines which of the two registers should be loaded in the Y Data Buffer in A9 Data Converter.

Display Control Logic (I)

The Display Control Logic circuit generates timing signals for the CRT display hardware. All signals except STROKE DATA STROBE and STROKE BLANK are derived from the Counter.

The STROKE DATA STROBE signal strobes data into the Y Data Buffer whenever the CPU is fetching an instruction from the Program ROM and a trace is being drawn on the CRT.

STROKE GEN TIMING determines the timing of the strokes drawn by the Digital Y Generator in A9. (See Figure 8-24.) The signal is high for the 6 μs that a stroke is being drawn, and low for the 1 μs that the Y value is being updated and the CRT beam is blanked.

STROKE BLANK determines whether a stroke should be blanked. The signal is latched at the same time as the Y stroke data to indicate whether the CRT beam should be off for that particular stroke.

The last two signals control the Digital X Generator (in A5 X-Y Amplifier Assembly), which moves the beam horizontally across the CRT. L X CLAMP RIGHT is a negative-going pulse that forces the beam to start at the same place on the screen for each trace. (See Figure 8-25.) X HOLD LEFT is used only when the instrument is in the mixed mode, in which an analog signal is displayed in conjunction with the digitally generated characters and graticule illumination. X HOLD LEFT holds the Digital X generator output fixed while the analog signal finishes its sweep. This ensures that after a full analog trace has been displayed, the Digital X Generator output still corresponds to the left edge of the screen.

Stroke Memory and Multiplexer (J)

The Stroke Memory and Multiplexer circuit stores the data to draw both of the digitally stored traces on the CRT. The memory section of the Stroke Memory and Multiplexer contains 1024 words of static RAM (random access memory). There are 512 words per trace, and each word is 16 bits wide. The data bus of the RAM array is connected to the 16-bit data bus from the Data Multiplexer.

The address bus of the RAM comes from the multiplexer section of Stroke Memory and Multiplexer, which selects either the CPU address bus or the Counter bus. When the CPU address is selected, the 10 bits of the memory address correspond to the CPU lower 8 bits of address A0 through A7, to a hardware MEM PAGE SEL line, and to CPU address A8. When the CPU fetches an instruction from the Program ROM and the multiplexer switches to the Counter, the lower 9 bits of memory address correspond to Counter lines C5 through C13 and the tenth bit to C15. With the CPU or the Counter address, the lower 9 bits are used to access the 512 locations that correspond to 1 trace. The tenth bit selects between Trace A or Trace B.

The two remaining bits in the multiplexer are used for the chip selected (not CS) lines for System Memory and Stroke Memory.

For troubleshooting, a hardware jumper is provided on the ROM SEL line to hold the multiplexer switched to either the CPU address bus or the counter bus. For normal operation the jumper must go from MX to NORM.

Counter (K)

The Counter circuit divides down the 2 MHz CPU clock to provide timing signals to run the digital display hardware. (See Figure 8-25.) The first divider in the chain is U27, which divides 2 MHz by 14 to provide CNT1 through CNT4, determining that strokes are drawn every 7 μs. The CNT4 output is then divided by 256 in U14, followed by a divide by 2 in the first stage of U23. This yields CNT5 through CNT13 to determine that a trace consisting of 512 strokes (480 within the graticule) will be drawn in 3.58 ms. The remainder of U23 is a divide by 5 to provide C14 through C16 which determine whether trace A, trace B, graticule illumination, or characters will be drawn on the CRT. This sets the complete display refresh cycle at 17.9 ms (55.8 Hz).

U21, U7, U35B, and U20C are used in the mixed mode, in which digitally generated characters and graticule illumination are displayed in conjunction with the analog signal. (See Figure 8-26.) If the ANLG FAST SWP

EN line is high, the counter is stopped when it arrives at the beginning of Trace B and waits (CNT EN low) for the next analog sweep to begin (L INT/EXT RETRACE goes high). After the sweep starts, the counter resumes counting (CNT EN high), and the instrument takes one or more sweeps. At the end of the time slot allotted to Trace B, the counter stops again (CNT EN low) and waits until the analog sweep in progress finishes (L INT/EXT RETRACE goes low). In this way, the asynchronous analog sweep and display refresh are interleaved so that time spend displaying characters, graticule illumination, and analog trace are comparable, and the analog trace does not start or end in mid-sweep.

System Memory and Multiplexer Ⓛ

The System Memory circuit consists of the following four blocks:

$80 – $BF	Character buffer for upper line on CRT
$C0 – $FF	Scratchpad memory for CPU
$180 – $1BF	Character buffer for lower line on CRT
$1C0 – $1FF	Scratchpad and machine stack for CPU

The Memory section of System Memory and Multiplexer contains 256 bytes of static RAM; each byte is 8 bits. The data bus of the RAM array goes to the high 8 bits of the 16-bit data bus from the Data Multiplexer. The address bus of the RAM goes to the multiplexer section of the System Memory and Multiplexer, which selects either the CPU address bus or the Counter bus. When the CPU address is selected, the 8 bits of memory address correspond to the lower 7 bits of address in the CPU (A0 through A6). The eighth bit (A8) selects between memory blocks $80 through $FF and $180 through $1FF.

When the multiplexer switches to the Counter, the Counter accesses the character buffers, using lines CNT9 through CNT14 to select the character position and CNT5 to select the upper or lower buffer.

The hardware jumper described in the Stroke Memory and Multiplexer description also affects the multiplexer in System Memory and Multiplexer.

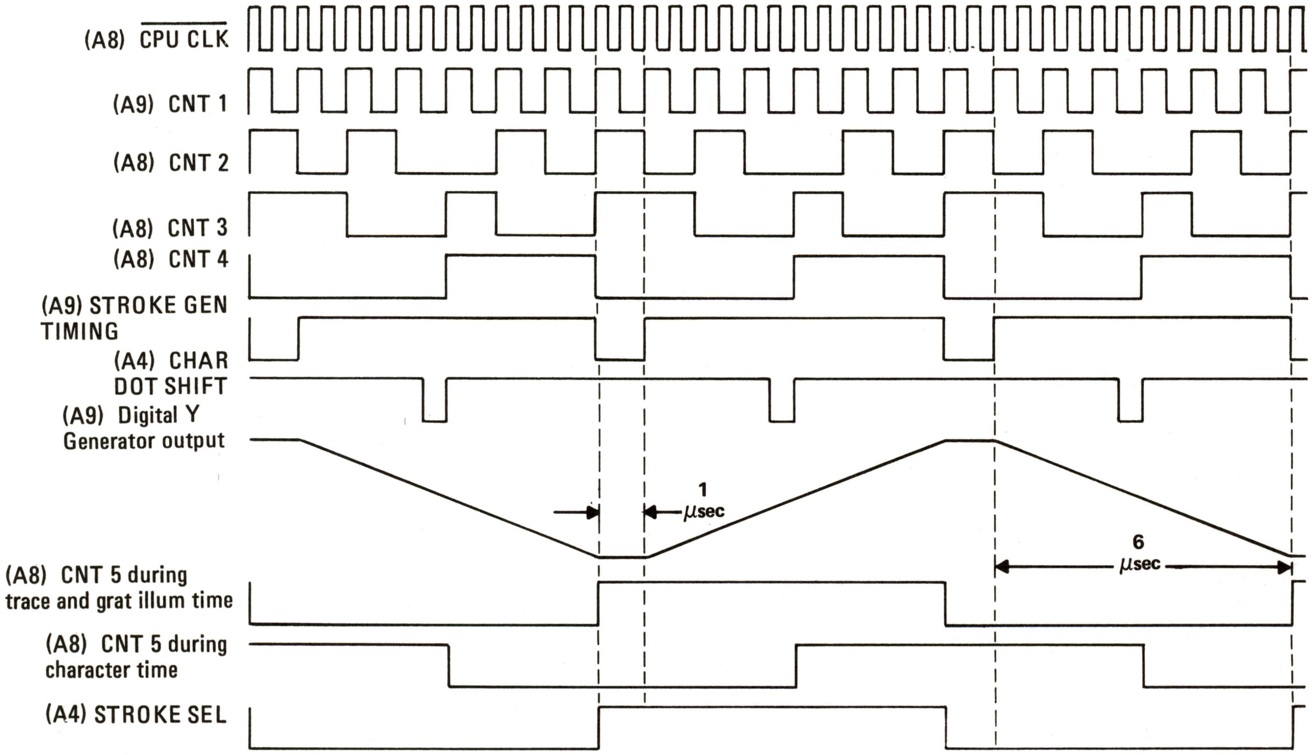

Figure 8-24. Stroke Generator Timing Diagram

Memory Select Ⓖ

In the Memory Select circuit, control lines are derived from both the CPU address bus and the Counter.

The two lines derived from the CPU addresses are used when the CPU controls the memory address. The low true select line for Stroke Memory (MS1) comes from U20A; the low true select line for System Memory (MS0) from U28C.

The two lines derived from the Counter (MS2, MS3) are used when the display hardware accesses memory and the Counter controls the memory address. U15A generates a signal that is high when characters are drawn on the CRT. U15B inverts this signal to provide the memory select line, MS2, for System Memory where characters are stored. U15C generates a signal that is high when trace A or trace B is drawn on the CRT. U39A inverts this signal to form MS3, the memory select line for Stroke Memory.

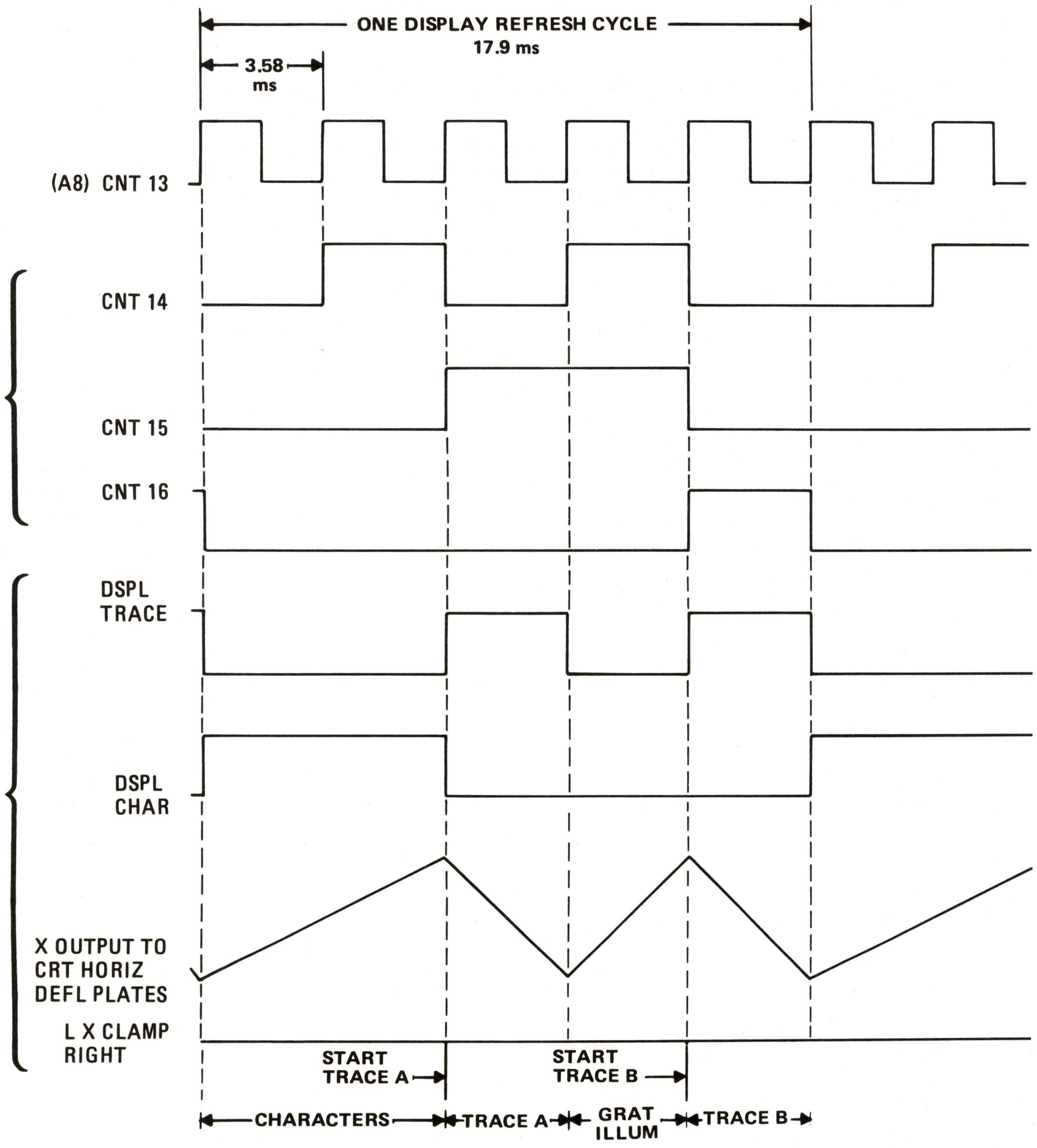

Figure 8-25. Digital Display Timing Diagram

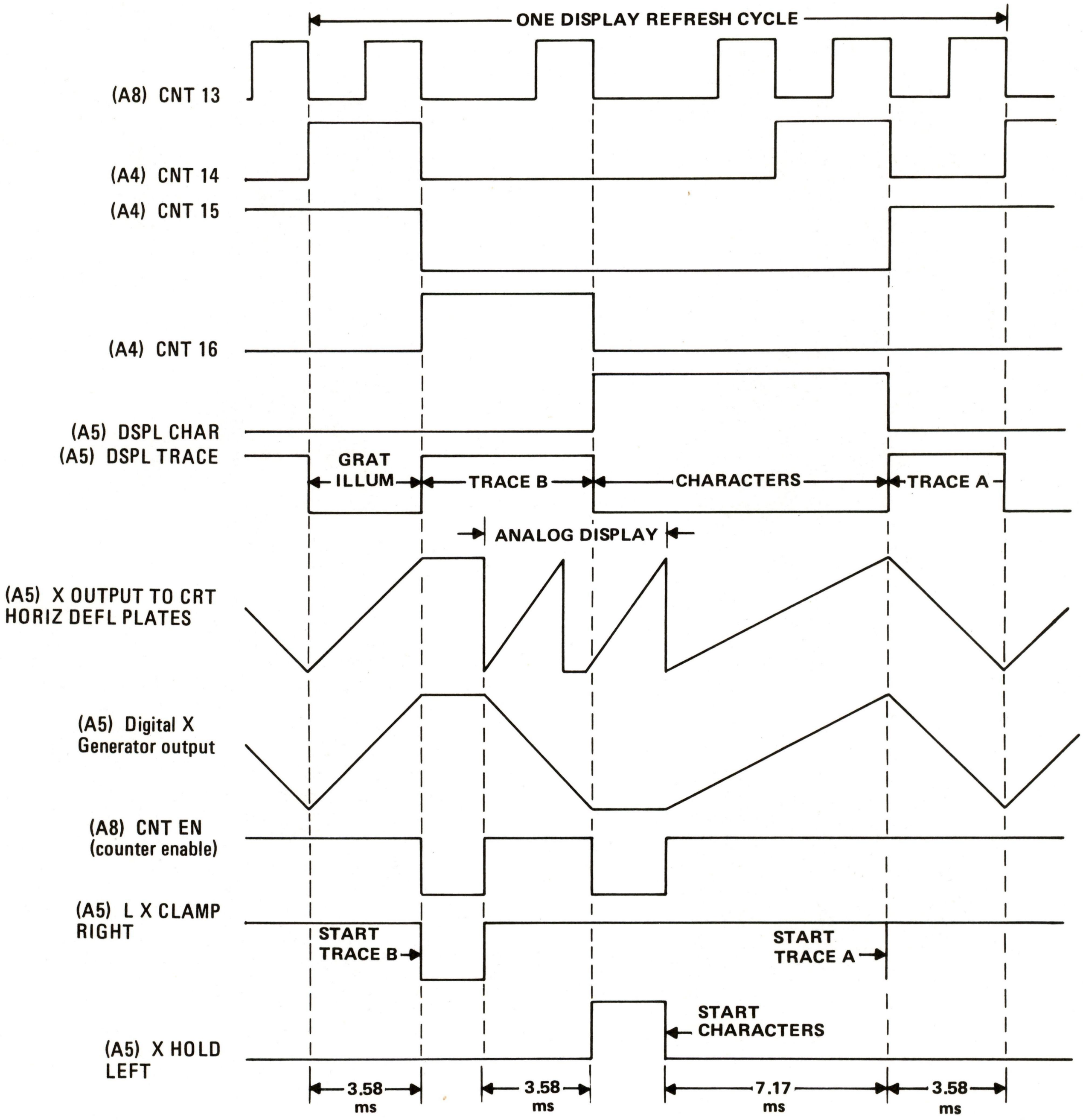

Figure 8-26. Mixed Analog/Digital Display Timing Diagram

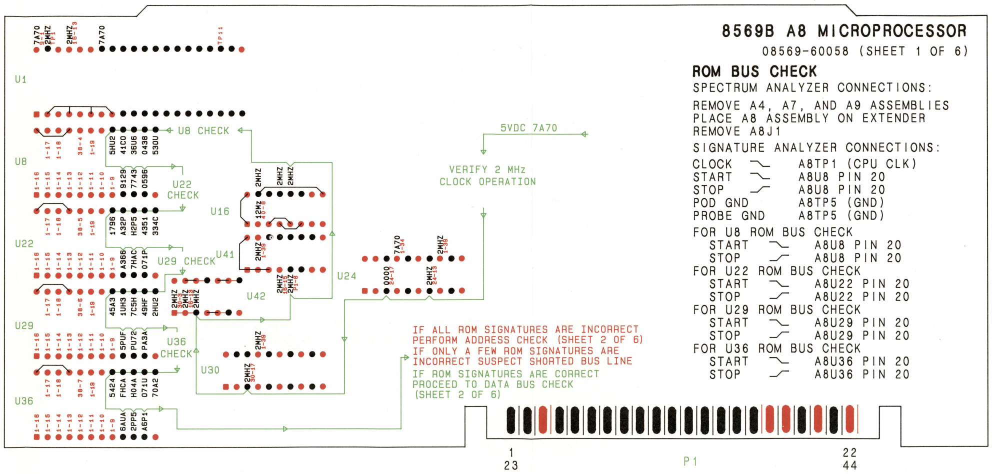

Figure 8-27. A8 Microprocessor Signature Analysis and Troubleshooting Diagram (1 of 6)

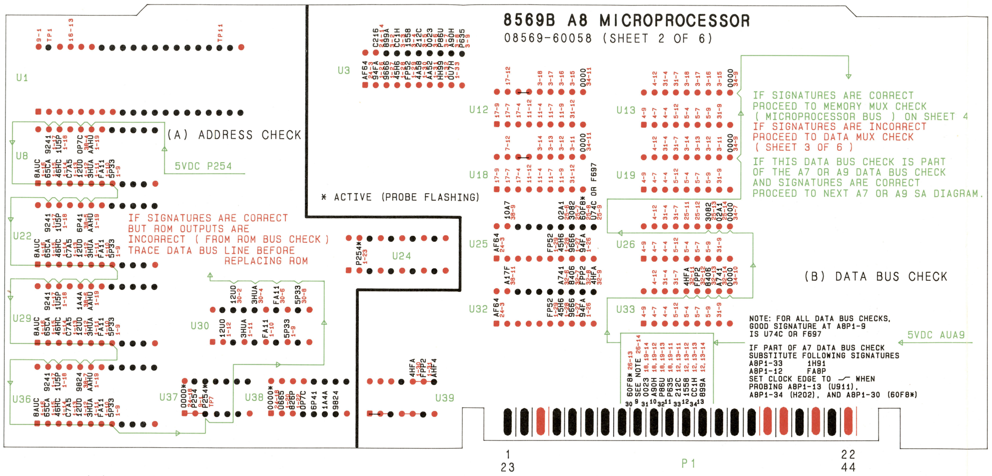

(A) ADDRESS CHECK

SPECTRUM ANALYZER CONNECTIONS:

REMOVE A4, A7, AND A9 ASSEMBLIES
REMOVE A8J1

SIGNATURE ANALYZER CONNECTIONS:

CLOCK ⌐_ A8TP1(CPU CLK)
START _⌐ A8TP11 (ROM EN)
STOP ⌐_ A8TP11 (ROM EN)
POD GND A8P1-22
PROBE GND A8TP5

(B) DATA BUS CHECK

SPECTRUM ANALYZER CONNECTIONS:

REMOVE A4, A7, AND A9 ASSEMBLIES
GROUND A8U34 PINS 7,9,10, AND 11
AT P1-22 USING 16 PIN IC EXTENDER
(HP PART NUMBER 1400-0734)
REPLACE A8J1

SIGNATURE ANALYZER CONNECTIONS:

CLOCK ⌐_ A8P1-8 (SYS CLK)
START ⌐_ A8U1-24 (AB-14)
STOP ⌐_ A8U1-24 (AB-14)
POD GND A8P1-44
PROBE GND A8TP5

Figure 8-27. A8 Microprocessor Signature Analysis and Troubleshooting Diagram (2 of 6)

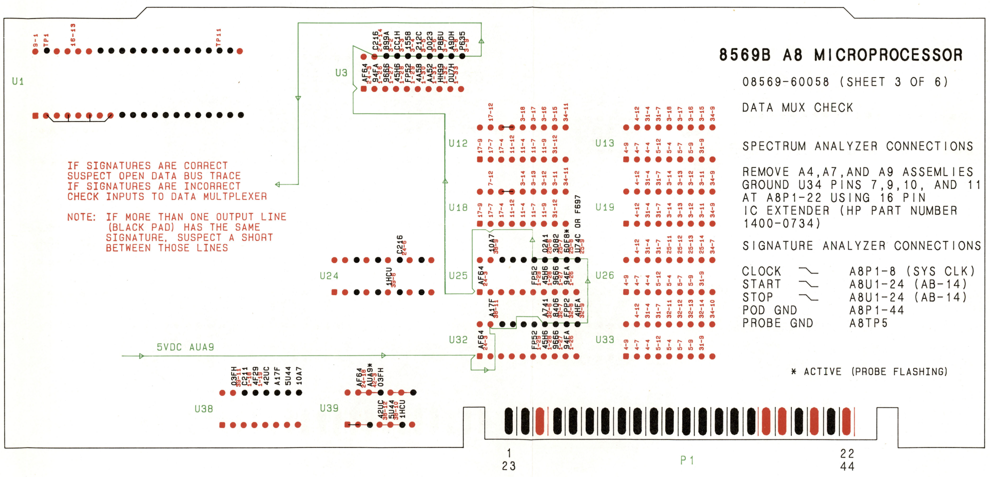

Figure 8-27. A8 Microprocessor Signature Analysis and Troubleshooting Diagram (3 of 6)

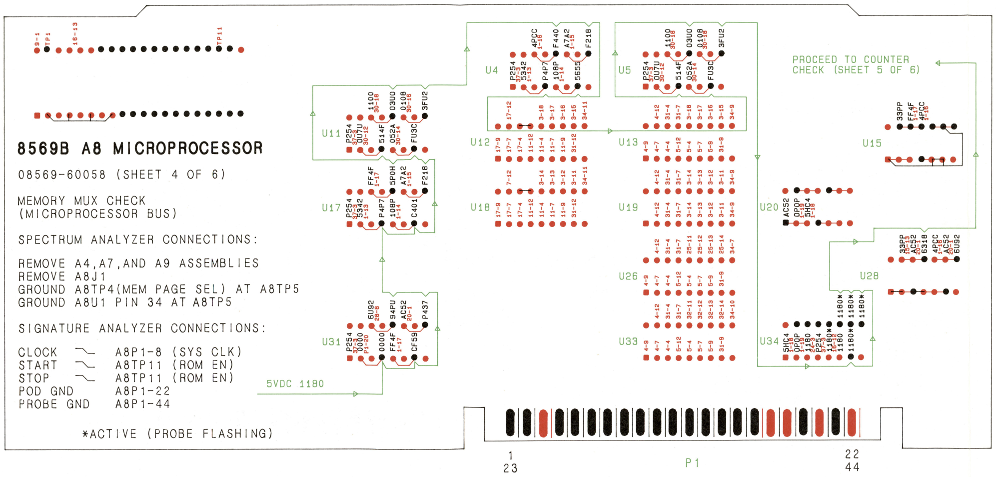

Figure 8-27. A8 Microprocessor Signature Analysis and Troubleshooting Diagram (4 of 6)

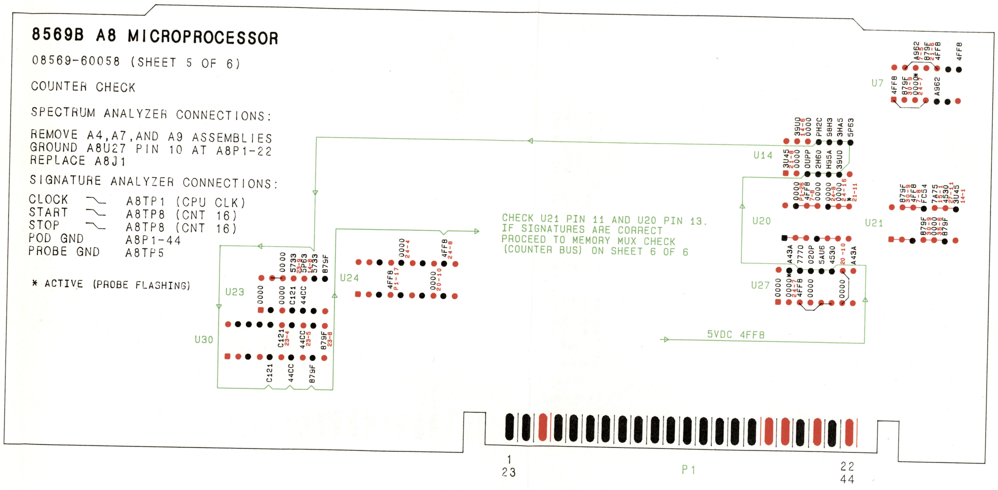

Figure 8-27. A8 Microprocessor Signature Analysis and Troubleshooting Diagram (5 of 6)

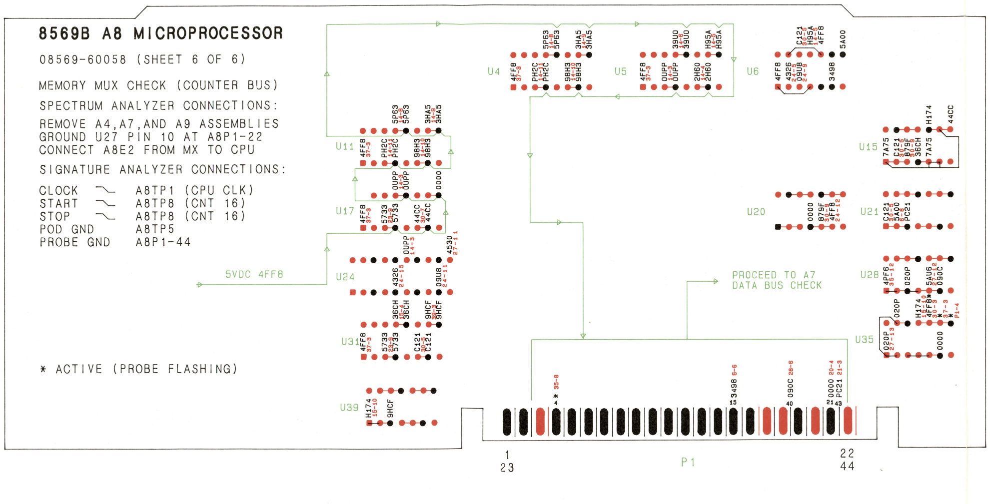

Figure 8-27. A8 Microprocessor Signature Analysis and Troubleshooting Diagram (6 of 6)

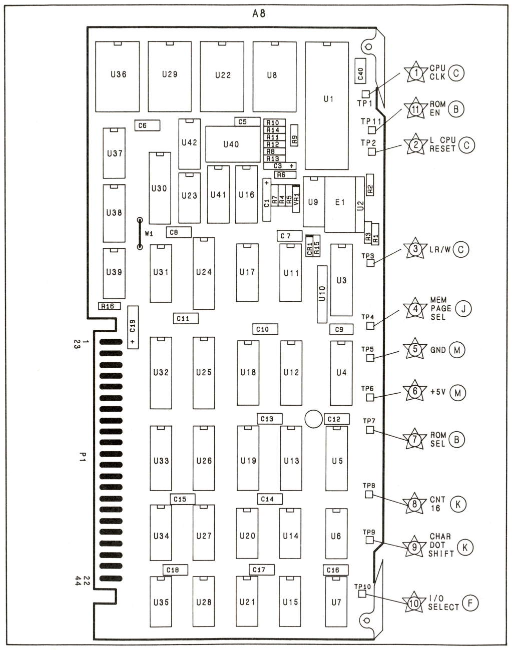

Figure 8-28. A8 Microprocessor Assembly, Component Locations

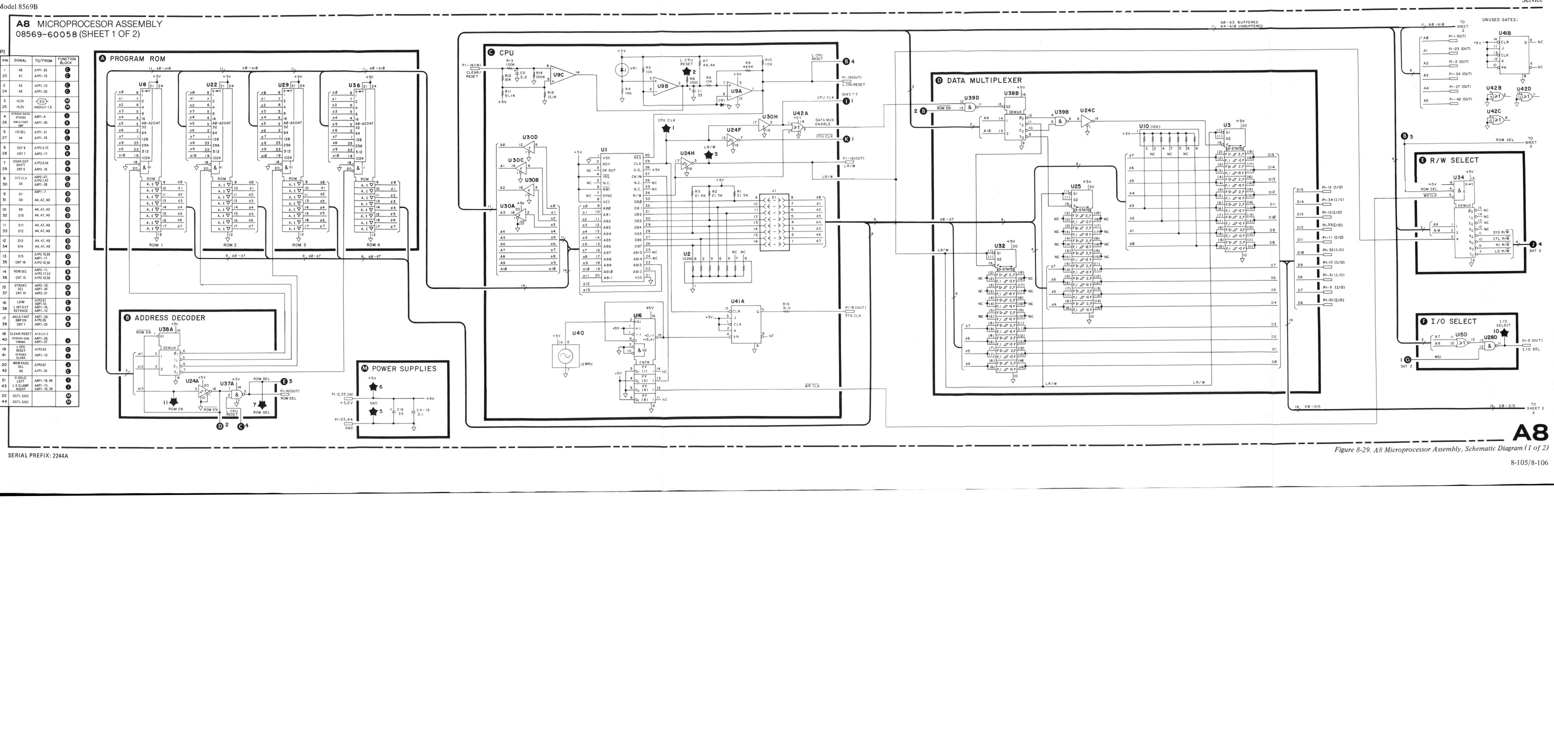

Figure 8-29. A8 Microprocessor Assembly, Schematic Diagram (1 of 2)

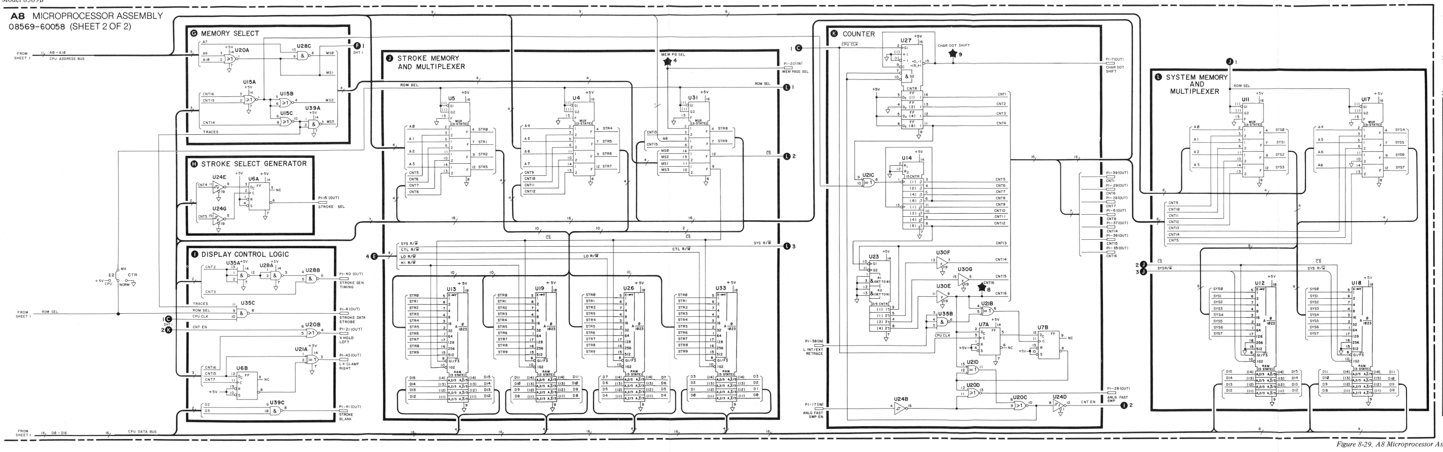

NOTES

1. REFERENCE DESIGNATORS WITHIN THIS ASSEMBLY ARE ABBREVIATED. FOR COMPLETE REFERENCE DESIGNATION, PREFIX ABBREVIATION WITH ASSEMBLY DESIGNATION.
2. UNLESS OTHERWISE INDICATED:
   RESISTANCE IS IN OHMS (Ω)
   CAPACITANCE IS IN PICOFARADS (PF)
   INDUCTANCE IS IN MICROHENRIES (μH)
3. MNEMONIC TABLE

MNEMONIC	DEFINITION
A0, A1, A2, A3, A4, A5	CPU ADDRESS LINES
ANLG FAST SWP	ANALOG DISPLAY FOR FAST SWEEP SPEEDS
CHAR DOT SHIFT	ENABLES CHARACTER DOT SHIFT REGISTER
CNT1, CNT6, CNT7, CNT8, CNT14, CNT15, CNT16	MASTER COUNTER LINES FOR DIGITAL DISPLAY
SYS CLK	SYSTEM CLOCK
D6, D7, D8, D9, D10, D11, D12, D13, D14, D15	CPU DATA BUS LINES
I/O SEL	CPU SELECTS INPUT OR OUTPUT
L CPU RESET	CPU MASTER RESET
LR/W	CPU READ/WRITE
L X CLAMP RIGHT	CLAMPS DIGITAL X GENERATOR TO EXTREME RIGHT
ROM SEL	CPU SELECTS PROGRAM ROM
STROKE DATA PROBE	STROBES DATA FROM STROKE MEMORY INTO STROKE GENERATOR
STROKE GEN TIMING	TIMES START AND STOP OF STROKE
STROKE SEL	SELECTS ODD OR EVEN STROKE
STROKE BLANK	STROKE BLANK DATA FROM STROKE MEMORY
X HOLD LEFT	HOLDS DIGITAL X GENERATOR AT EXTREME LEFT

A8

Figure 8-29. A8 Microprocessor Assembly, Schematic Diagram (2 of 2)

A9 DATA CONVERTER ASSEMBLY, CIRCUIT DESCRIPTION

A9 Data Converter Assembly has two major functions. The first function, performed by the Control circuit, the Multiplexer circuit, the Track and Hold circuit, the Peak Detector circuit, and the Analog to Digital Converter circuit, is to accept analog signals and convert them to digital data which is stored in A8 Microprocessor Assembly. The second function, accomplished by the Y Data Buffer circuit and the Digital Y Generator circuit, is to process digital trace data from A8 to form the vertical signal for the cathode ray tube (CRT) when the instrument is in the digital display mode.

Control Ⓐ

The Control circuit controls the Peak Detector circuit and the Track and Hold circuit.

The REQ CONV signal from A7 Input/Output Assembly is delayed by D flip-flop U11A to create the HOLD signal.

When the HOLD signal is high and the X CONV signal from A7 is low, monostable multivibrator U12 outputs the PK RESET signal.

Tri-State Buffer Ⓑ

The Tri-State Buffer circuit, controlled by microprocessor U1 in A8, transfers three input signals to the data bus. The buffer is controlled by two lines from A7, STAT SWP EN and STAT ADC EN.

Peak Detector Ⓒ

The Peak Detector circuit monitors the vertical input signal and holds its maximum level over the time interval between the resets of the Peak Detector.

PK OFFSET potentiometer R8 adjusts the offset of differential amplifier circuit Q6, A and B, and Q8, A and B. In this differential pair, the incoming vertical voltage is compared with the last peak voltage, stored across C8.

Since the gate and source of Q11B are tied together, a constant current flows through it. This same current flows in Q11A. With equal current through these matched transistors, both maintain the same gate-to-source potential of zero volts. Changes in the gate voltage of Q11A, established by the charge on C8, are tracked by the source as this relationship is maintained. These changes are sent via Q10 to output buffer operational amplifier U21 and to base of Q6B in the differential amplifier. If the incoming voltage is greater than the voltage across C8, Q8A turns on. This drives Q9B, forward biasing CR1, and causing C8 to be charged to this increased voltage. If the incoming signal voltage is less than the voltage across C8, then Q8A remains off and the charge on C8 is unchanged until the circuit is reset.

PK RESET from the Control circuit resets the Peak Detector circuit. A 200-ns, negative-going pulse from the PK RESET line turns off Q12, allowing the gate of Q7 to be forward biased by +15V through R11. The voltage turns on Q7 for a period of 200 ns and discharges C8.

Multiplexer Ⓓ

The Multiplexer circuit is used to multiplex signals to the Track and Hold circuit.

U7 outputs either the vertical peak signal (V-PEAK), the vertical signal (VERTICAL), or the horizontal signal (SWEEP −5 TO +5V) for analog-to-digital conversion. When SMPL/PEAK input is low, the vertical peak signal is selected; when SMPL/PEAK is high, the vertical signal is selected. Whenever X CONV is high, the horizontal signal is selected.

R48, R49, and SWP GAIN potentiometer R47 form a voltage divider to attenuate the sweep input voltage. The 10-volt variation of the input voltage is changed to a 1-volt variation. SWP OFFSET adjustment R45 sets the current to offset the voltage for a range of 0V to +1V.

Track and Hold E

The Track and Hold circuit either holds or follows the input signal. The circuit has a gain of 10.

Q5A, Q5B, and Q3 form a unity gain buffer amplifier.

The track and hold function is accomplished by Q2 and C20. When the HOLD signal from the Control circuit is high, Q4 is turned on and Q2 is turned off. With Q2 off, C20 stores the voltage at the source of Q2. When the HOLD signal is low, Q2 is turned on, and the voltage at the source of Q2 follows the input voltage.

Operational amplifier U4 provides a voltage gain of 10. Q1 buffers the input signal to U4.

ADC GAIN adjustment R29 sets the gain of the Track and Hold circuit.

ADC OFFSET potentiometer R23 adjusts the offset of the Track and Hold circuit.

Y Data Buffer F

U8, U16, and U15 form a buffer for 11 bits of data: 10 bits of vertical display information and 1 bit of blanking. Data is latched into the buffer by STROKE DATA STROBE. Data is output from the buffer when STROKE SEL changes state.

Inputs to digital-to-analog converter (DAC) U19 are the most significant eight bits of data from buffers U8 and U16. U19 accepts this digital data and converts it to an analog current which is added to the current through R51 and R52 to form STROKE LEN, a control signal for the Z Modulation circuit in A4 Z Axis Assembly. Thus, the intensity of the strokes drawn on the CRT is varied as a function of their length. This results in a more uniform trace intensity. Without this provision the long strokes would be much dimmer than the short strokes as all strokes are drawn in the same amount of time.

U10 is two D flip-flops that extend blanking by one 7-μs interval so that a line is not visible between an unblanked data value and an adjacent blanked value.

Digital Y Generator G

The Digital Y Generator circuit generates a vertical signal for the CRT when the instrument is in the digital display mode. Data from the Y Data Buffer circuit provides the vertical display information.

DAC U14 provides an output current proportional to the 10-bit digital value appearing at the input. This analog current, combined with the current through R59 and R60, forms a constant current source that is used to develop the signal that draws strokes on the CRT. STROKE GAIN adjustment R62 sets the full scale current for U14.

U18 and C62 form an integrator. During the 6 μs that STROKE GEN TIMING is high, switch Q14 is closed and the integrator ramps up or down, depending on the constant current input at the source of Q14. The integrator input current for each 6-μs interval is the difference between the current from U14 and the current through R59 and R60. The current from U14 is based on the next data value at the input to U14. The current through R59 and R60 is based on the last voltage held at the input of U13. If the current from U14 is greater than the current through R59 and R60, the integrator ramps up.

U13 and C58 form a sample and hold circuit. During the 1 μs that the STROKE GEN TIMING signal is low, switch Q16 (N-channel enhancement mode MOSFET) is closed and C58 charges to the present value of the integrator (described in previous paragraph) output voltage; the circuit is in its sampling mode. Switch Q16 is open for the 6 μs that STROKE GEN TIMING is high, allowing U13 to maintain a constant current output from the last voltage received. (See Figure 8-24 in the A8 circuit description for timing information.) STROKE-FB adjustment R59 varies the current through R59 and R60. The output from U13 adds to the current from U19 in the Y Data Buffer circuit to form the STROKE LEN signal.

During the 1 μs that STROKE GEN TIMING is low, switch Q15 is closed. This holds the output of U14 at ground while its input data is changing. During the 1-μs, switch Q13 is also closed. This holds the bottom of C58 to ground while U13 is sampling.

U20 provides a +15V bias voltage for the logic levels of the MOSFETs.

Analog to Digital Converter (H)

The Analog to Digital Converter circuit accepts an analog input voltage and converts it to digital information for transfer to the data bus.

The input signal to the Analog to Digital Converter circuit is an analog voltage from the Track and Hold circuit (4 (E)) to DAC U3. In U3 a programmed current is formed by the input from the successive approximation register (SAREG) U1. The difference between this programmed current and the current through U3 internal resistor generates an error voltage at the output of U3 (pin 15). Since the error voltage causes the comparator U2 output to go high or low, it is this error voltage, fed back to U1, that determines whether the bit that generated the programmed current in U3 is a high bit or a low bit. If the programmed current is greater than the current through the internal resistor of U3, the last bit output from U1 becomes a low bit.

CNT 1 controls the data output from U1, which sets high each data bit in succession from the most significant bit (MSB) to the least significant bit (LSB). With the HOLD control signal high, each of the next 12 positive edges of CNT 1 causes the previous bit of data output to be set high or low, depending on the output of comparator U2. The previous bit (dependent on U2) is set at the same time the next bit (to U3) is set high. The last two bits of the SAREG are not used (changing the 12-bit SAREG to a 10-bit SAREG). When the HOLD signal is low, U1 is reset.

Since microprocessor U1 in A8 Microprocessor Assembly can process only 8 bits of data at a time, the 10 bits of data are changed to one 8-bit byte and one 2-bit byte. When ADC HBYTE is low (address $1), tri-state buffers U5 and U6 output the eight high order bits to the data bus. When ADC LBYTE is low (address $0), U5 outputs the two low order bits to the data bus.

A9TP5

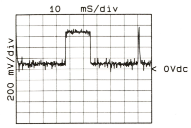

See NOTE 7
Set scope trig to HF REJ-DC

A9TP3

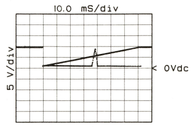

See NOTE 7
Set scope trig to HF REJ-DC

A9TP1

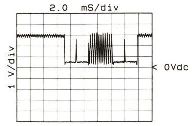

See NOTE 7
Set scope trig to HF REJ-DC

A9TP4

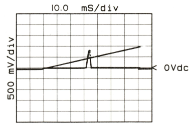

See NOTE 7
Set scope trig to HF REJ-DC

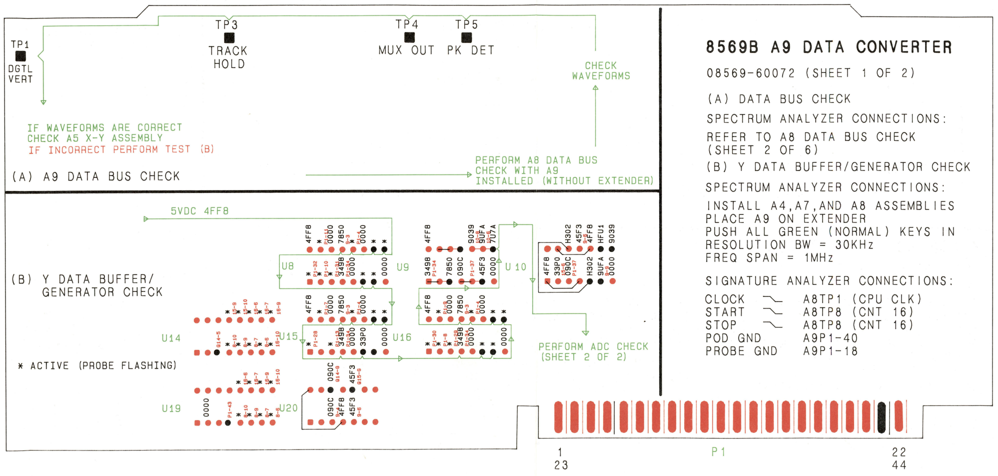

Figure 8-30. A9 Data Converter Signature Analysis and Troubleshooting Diagram (1 of 2)

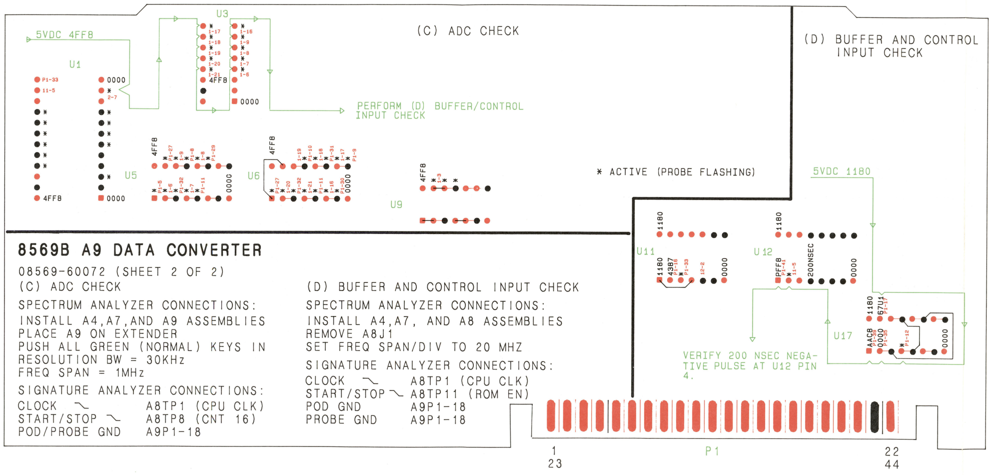

Figure 8-30. A9 Data Converter Signature Analysis and Troubleshooting Diagram (2 of 2)

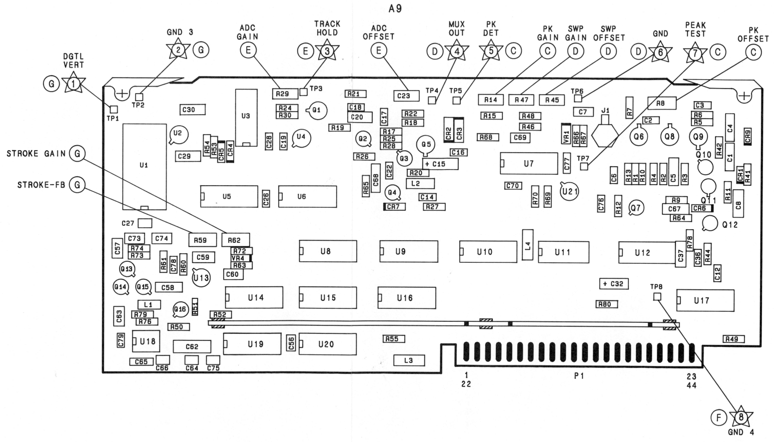

Figure 8-31. A9 Data Converter Assembly, Component Locations

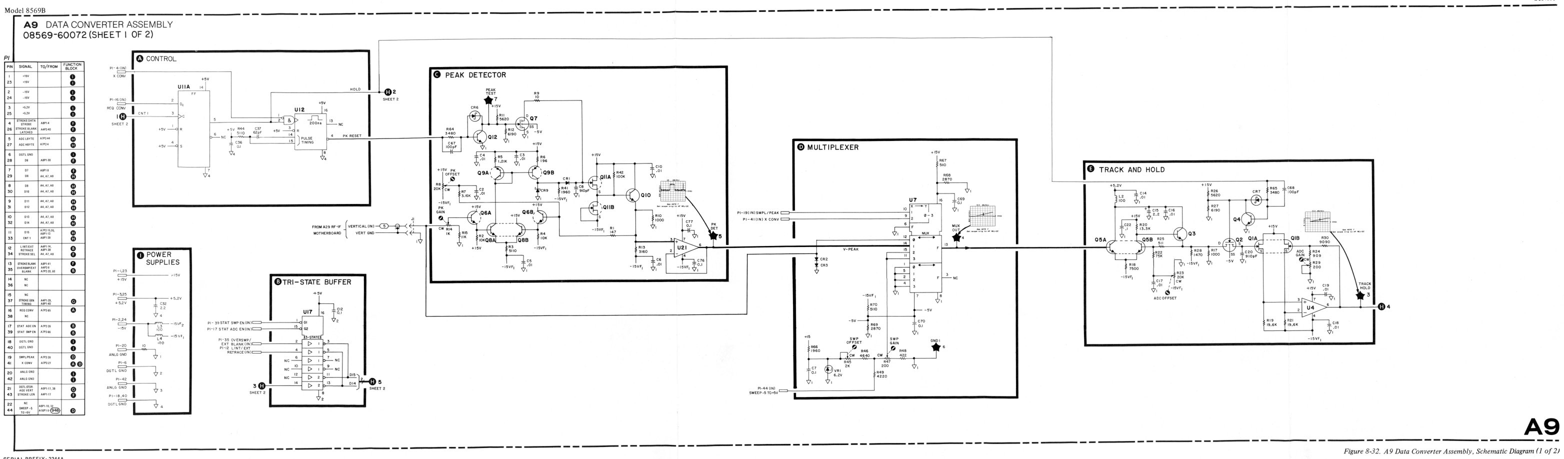

SERIAL PREFIX: 2244A

Figure 8-32. A9 Data Converter Assembly, Schematic Diagram (1 of 2)

A9 DATA CONVERTER ASSEMBLY
08569-60072 (SHEET 2 OF 2)

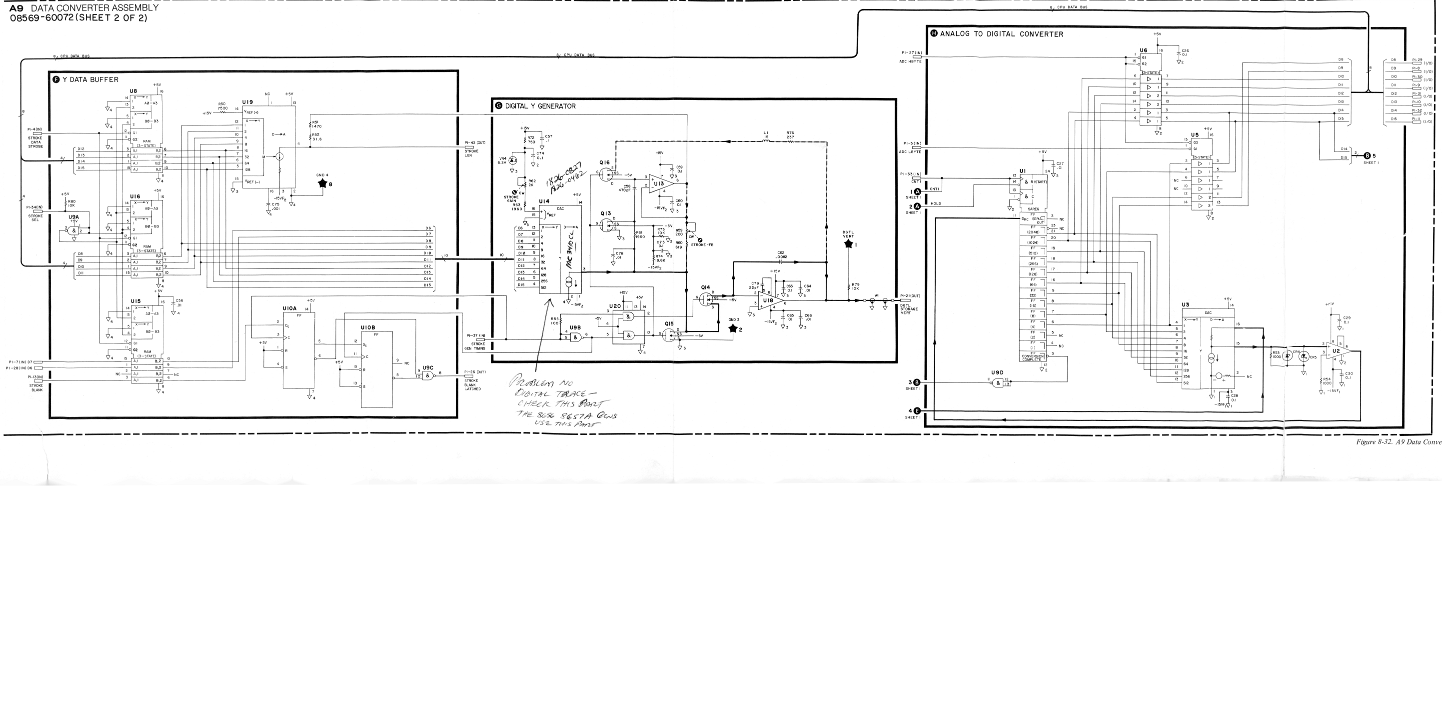

NOTES

1. REFERENCE DESIGNATORS WITHIN THIS ASSEMBLY ARE ABBREVIATED. FOR COMPLETE REFERENCE DESIGNATION, PREFIX ABBREVIATION WITH ASSEMBLY DESIGNATION.
2. UNLESS OTHERWISE INDICATED:
   RESISTANCE IS IN OHMS (Ω)
   CAPACITANCE IS IN PICOFARADS (PF)
   INDUCTANCE IS IN MICROHENRIES (μH)
3. THERE ARE GUARD RING TRACES ON THE PC BOARD WHICH ARE NOT SHOWN ON THE SCHEMATIC. THESE TRACES GUARD SENSITIVE CIRCUIT POINTS FROM LEAKAGE CURRENTS.
4. PIN CONFIGURATION FOR Q3, Q10, Q15, Q16, Q17, Q18.

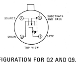

5. PIN CONFIGURATION FOR Q2 AND Q9.

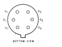

6. MNEMONIC TABLE

MNEMONIC	DESCRIPTION
D6, D7, D8, D9, D10, D11, D12, D13, D14, D15	CPU DATA BUS
DGTL STORAGE VERT	DRIVES Y AMPLIFIER IN STORAGE MODE.
STROKE LEN	CURRENT PROPORTIONAL TO STROKE LENGTH.
STROKE BLANK LATCHED	STROKE BLANK DATA HELD DURING STROKE.

A9

Figure 8-32. A9 Data Converter Assembly, Schematic Diagram (2 of 2)

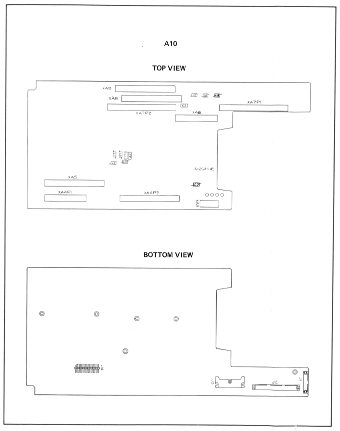

Figure 8-33. A10 Display Motherboard Assembly, Component Locations

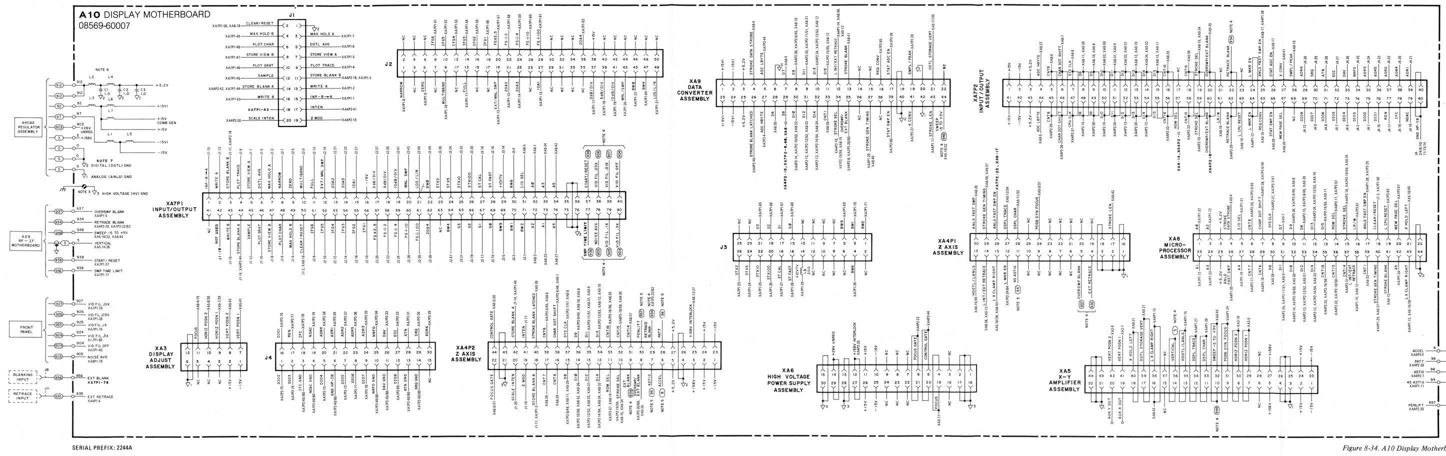

SERIAL PREFIX: 2244A

NOTES

1. REFERENCE DESIGNATORS WITHIN THIS ASSEMBLY ARE ABBREVIATED. FOR COMPLETE DESIGNATOR, PREFIX WITH ASSEMBLY REFERENCE DESIGNATOR.
2. UNLESS OTHERWISE INDICATED:
   RESISTANCE IN OHMS (Ω).
   CAPACITANCE IN MICROFARADS (μF).
   INDUCTANCE IN MICROHENRIES (μH).
3. MOTHERBOARD RETAINING SCREWS MUST BE IN PLACE TO COMPLETE HIGH VOLTAGE GROUND CONNECTION TO CHASSIS GROUND.
4. TRACE CONNECTS TO A PLATED-THROUGH, SOLDERED WIRE CONTACT, NUMBERED PER THE WIRE COLOR CODE (E.G., O 934). LOOK FOR WIRE CONNECTION AT LEFT EDGE OF SCHEMATIC.
5. TRACE CONNECTS TO A PLATED-THROUGH, SOLDERED WIRE CONTACT, NUMBERED PER THE WIRE COLOR CODE (E.G., O 98). LOOK FOR WIRE CONNECTIONS AT RIGHT EDGE OF SCHEMATIC.
6. L1 THROUGH L7 ARE WIDEBAND CHOKES, 680 OHMS AT 180 MHz.
7. NUMBERED GROUNDS ARE FOR IDENTIFICATION ON THIS SCHEMATIC ONLY.

A10

Figure 8-34. A10 Display Motherboard Assembly, Schematic Diagram

A11 DVM DIGITAL ASSEMBLY, CIRCUIT DESCRIPTION

A11 DVM Digital Assembly has two functions. It includes most of the circuitry for time measurement and control of A12 DVM Analog Assembly (refer to the circuit description for that assembly); and it provides drive for the FREQUENCY GHz display and data for the CRT center frequency readout. Data such as Center Frequency BCD bits 1, 2, 4, and 8; Center Frequency Digit Select 1, 2, and 4; and Center Frequency polarity are sent to A7 Input/Output Assembly and processed by A8 Microprocessor Assembly to be displayed on the CRT.

In the following descriptions, refer to the schematic and to the timing diagram, Figure 8-35.

DVM 2.5 MHz Clock Oscillator (C)

The crystal-controlled DVM 2.5 MHz Clock Oscillator drives the Delay Timer and the DVM Counter. The output goes through open-collector buffer Q4.

Delay Timer (F)

The Delay Timer has two 4-bit counters, U2 and U3, configured to provide a delay of 128 clock pulses. The delay commences at the beginning of T_4 and provides a positive TTL RESET output that lasts 51 μsec. The RESET output goes to the DVM Counter and to A12 DVM Analog Assembly.

Data Transfer Timer (E)

The Data Transfer Timer has two functions: (1) It stops the clock to the DVM Counter when the ZERO DETECT HELD line from A12 DVM Analog Assembly goes low, and (2) it provides the strobe signal to transfer the count of the DVM Counter into storage latches.

When the ZERO DETECT HELD line goes low, the clock input to the DVM Counter is forced low, allowing the count of the DVM Counter to ripple through.

After the count has stabilized, the strobe line goes low, transferring the data into the buffer latches of counter U16. The strobe line then goes high, and the latches hold the count, permitting the clock input to be re-enabled.

DVM Counter (H)

The DVM Counter has two functions: (1) It measures the discharge time of the Integrator in A12 DVM Analog Assembly, and (2) it provides 25-Hz pulses to drive the State Counter in A12 DVM Analog Assembly.

Counter U16 consists of a six-decade BCD counter, six BCD latches, and a 6-to-1 BCD multiplexer. The clock input (pin 14) accepts the signal from the DVM 2.5 MHz Clock Oscillator, which is controlled by the Data Transfer Timer. The RESET input sets the counter to all zeroes when it receives a high from the Delay Timer. The strobe input transfers the count from the counter to the storage latches in U16 when the strobe line is pulled low by U14C of the Data Transfer Timer.

The 1, 2, and 4 inputs of U16 (pins 10, 9, and 8) receive a 3-bit binary count from the Display Scanner Counter Decoder. This count determines which decade the multiplexer selects and sends to the A,1 outputs. The output of the fifth decade (carry) is always present on U16 pin 7 as a 25-Hz pulse train. When the pulse is low, Q5 is off and a high-level output is sent as a clock pulse to the State Counter in A12 DVM Analog Assembly. A low-to-high transition out of Q5 advances the State Counter. The zener diodes VR1 and VR2 respectively provide −5V and −12V supply voltages for U16.

The resistors in U23 provide pull-up to +5V and set the high-level inputs 1, 2, and 4 and A,1 outputs of U16.

Reference Gate (A)

The Reference Gate provides the signal to turn on +REF EN or −REF EN to A12 DVM Analog Assembly. When ZERO DETECT HELD, INPUT ENABLE, and POL are all high, +REF EN goes low, turning on the

+REF switch in A12 DVM Analog Assembly. When ZERO DETECT HELD and INPUT ENABLE are high and POL is low, −REF EN goes low, and the −REF switch in A12 DVM Analog Assembly is turned on.

Polarity Storage Ⓑ

The Polarity Storage flip-flop U22B examines the state of the ZERO DETECT line at the beginning of T_3. When the CENTER FREQ voltage going to A12 DVM Analog Assembly is positive, ZERO DETECT is low, and POL (the output of U22B) will go low on the positive transition of the INPUT ENABLE line. (Refer to the Reference Gate description for the function of the POL line.)

Display Scanner Oscillator Ⓓ

The Display Scanner Oscillator, a CMOS RC oscillator, provides a 6.4 kHz square-wave output through the TTL buffer U10E. The Display Scanner Oscillator provides the scanner clock (establishes the strobe rate) for the FREQUENCY GHz display on the front panel. The output of this circuit goes to the Display Scanner Counter Decoder and to the Driver Current Ramp Generator.

Display Scanner Counter Decoder Ⓖ

The Display Scanner Counter Decoder has three functions: (1) It provides a one-of-six decoded output to drive the center frequency display digits (FREQUENCY GHz readout), (2) it provides to A7 Input/Output Assembly a three-bit value that identifies the active BCD digit, and (3) it provides, through A12U9A and A11U9B, the timing information for the Drive Current Ramp Generator. (The Display Ramp Generator Transition Gate A12U9A is shown on the schematic for A12 DVM Analog Assembly because it is physically located on that board; however, it is functionally part of A11 DVM Digital Assembly.)

The flip-flops U22A and U21A generate the SCN/2 and SCN/4 outputs to A12U9A.

U21B, U21C, and U21D count from binary 0 to binary 5. The number goes to U15 and is decoded to a one-of-six output to the Display Digit Driver.

Illegal Code Blanking Ⓘ

If binary numbers 6 or 7 were to be erroneously generated by the Display Scanner Counter Decoder, they would be blanked by the Illegal Code Blanking Circuit.

Display Digit Driver Ⓙ

The Display Driver receives outputs from the Display Scanner Counter Decoder, boosts current levels, and generates cathode drive for the center frequency display (FREQUENCY GHz readout) on the front panel. Since the seven-segment displays are of the common-cathode type, the Display Digit Driver must sink the current from the lit segments of the driven digit. One of the six Darlingtons in U1 is enabled when the base is supplied current through its associated base resistor. This, in turn, requires that the open-collector inverter associated with the driver have a low input from the Display Scanner Counter Decoder.

The output voltage level of the Darlingtons is not well defined. When a Darlington is off and no segments are lit by another driver, the output will be pulled to a level near GND by the output pulldown resistor. If, however, another driver is lighting segments, the level will be between +1.5V and +2.0V on the outputs of the Darlingtons that are off. When a Darlington is on, its output level will be about +0.6V if no segment is lit, and between +1.0V and +1.5V if segments are lit, depending on the number of segments lit and individual component parameters.

Drive Current Ramp Generator Ⓟ

The Drive Current Ramp Generator generates a drive current ramp signal to the Center Frequency Segment Drivers and to the Decimal Point Driver.

The output of the Display Scanner Oscillator and the lines SCN/2 and SCN/4 are decoded by the Display Ramp Generator Transition Gate A12U9A (physically located in A12 DVM Analog Assembly) and U9B to generate a positive-going pulse (about 0.08 ms) which has a negative transition at the same time as the segment information changes states. The pulse is initiated approximately every 0.6 ms. This TTL input goes through resistors R17, R18, and R19 to generate roughly a ±1 mA current at the base of Q2. Since Q2 is connected as an integrator, this current will approximately equal the charging current for C16, generating a nominal rise and fall time of about 50 μsec at the collector of Q2. The output drive capability is increased by Q3, which acts as an emitter follower and has an output swing from GND to approximately +14V. C17 and R22 at the collector of Q3 prevent the ramp current from getting on the +15V power supply line. The output is of opposite polarity from the input and is delayed by the ramp rise and fall times. The ramp signal controls the rise and fall times in the Center Frequency Segment Drivers and the Decimal Point Driver.

Display Latches (K)

To ensure that BCD output data from the DVM Counter will change state only while the output of the Drive Current Ramp Generator is low, the BCD data from the counter is stored in latch U19 until the output of the Drive Current Ramp Generator reaches its lowest level. This BCD data is then sent to the Seven Segment Decoder and to A7 Input/Output Assembly.

Seven Segment Decoder (L)

The Seven Segment Decoder converts 4-bit BCD data to seven-line segment data to the Center Frequency Segment Drivers.

If the output of the Illegal Code Blanking circuit (the B1 input to U6) is low, all segment lines will go high. If a BCD zero occurs for the most significant digit of the display, a low on the ripple blanking input (RBI) line will cause all segment lines to go high, blanking that digit.

Minus Sign Gate (M)

When the POL line goes high (a negative number is to be displayed), the "g" segment line is brought low during the most significant digit to light the "g" segment (minus sign).

Center Frequency Segment Drivers (O)

The seven-segment displays (FREQUENCY GHz) are of the common-cathode type. This means that a current must be sourced to each of the instrument LEDs to light it. This current is provided by the seven transistors of U7, which are all connected in an emitter-follower configuration. The magnitude of the current is determined by resistors in the Frequency Display Assembly. For any given transistor, if the output of the Drive Current Ramp Generator is high (approximately +14V) and the open-collector inverter tied to its base is not conducting (the input from the Seven Segment Decoder is low), then base current will flow through its associated base resistor in U12 and the transistor will turn on, causing the segment to light. The output levels on lines CFa through CFg will then be slightly less than +5V.

When the Seven Segment Decoder changes state on the negative-going clock transition, the output of the Drive Current Ramp Generator will be low (approximately GND), and all segment drivers will be off. Just before a change of state, the output of the Drive Current Ramp Generator will ramp down from a high to a low and gradually turn the segment drivers off. Immediately following a change of state, the ramp will go from a low to a high, gradually turning the segment drivers on.

In this way the relatively large currents involved in the display will have controlled rise and fall times and will not generate the electrical interference usually associated with strobed digital displays.

Decimal Point Gate (N)

The Decimal Point Gate has one input, the Band External Mixing (BEM) line, originating on the RF/IF Motherboard (A29). The BEM line is the ORed combination of external band lines B7, B8, B9, and B10. When an external mixing band is selected, the BEM line will be high (+14V); for internal bands it will be low (−13V). The output of the Decimal Point Gate is a TTL level that follows the BEM line.

Decimal Point Driver (Q)

The Decimal Point Driver supplies current to the decimal point input of the Center Frequency Display Assembly. If the output of the Decimal Point Gate is high, the decimal point to the right of the third display digit will be lit; if the output is low, the decimal point to the right of the second digit will be lit.

The decimal point drive current is controlled by the Drive Current Ramp Generator in the same way as the segment drive currents.

Using a two channel oscilloscope (HP Model 180A/1801A/1821A or equivalent), connect state counter signal HA to Channel B input, set oscilloscope to "CHOP", trigger on Channel B. Use Channel A to check the various test points. Use 20 ms/division time base.

All measurements were taken with Frequency set at 12.0 GHz.

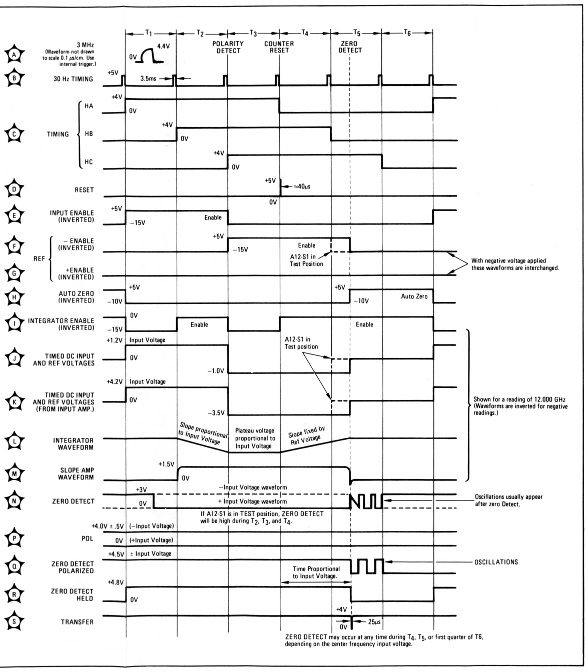

Figure 8-35. Measurement Timing Diagram for A11 DVM Digital Assembly and A12 DVM Analog Assembly

A11

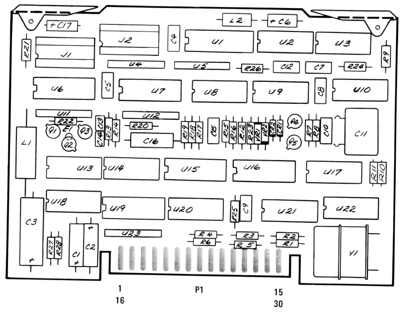

Figure 8-36. A11 DVM Digital Assembly, Component Locations

A11 DVM DIGITAL ASSEMBLY
08569-60052

P1

PIN	SIGNAL	TO/FROM	FUNCTION BLOCK
1	+5.2V		R
16	+5.2V		R
2	−15V		R
17	−15V		R
3	+15V		R
18	+15V		R
4	GND		R
19	GND		R
5	NC		
20	NC		
6	NC		
21	NC		
7	NC		
22	INPUT ENABLE	A12 P1–24	A B
8	NC		
23	NC		
9	FREQ DISPLAY HOLD	A1A2 J1–6	H
24	ZERO DETECT HELD	A12 P1–9	A
10	RAMP GEN EN	A12 P1–28	K
25	+ REF EN	A12 P1–10	A
11	SCN/2	A12 P1–29	G
26	−REF EN	A12 P1–11	A
12	HA	A12 P1–27	F
27	POL	A12P1–12	A B
13	SCN/4	A12 P1–30	G
28	ZERO DETECT	A12 P1–13	B
14	B7	A2A1J1–4	N
29	RESET	A12 P1–14	F
15	BEM	A29	N
30	25 Hz	A12 P1–15	D

J1

PIN	SIGNAL	TO/FROM	FUNCTION BLOCK
1	GND	A7J1-1	R
16	CF4	A7J1-16	K
2	GND	A7J1-2	R
15	CF2	A7J1-15	K
3	GND	A7J1-3	R
14	CF1	A7J1-14	K
4	GND	A7J1-4	R
13	CFZ	A7J1-13	G
5	GND	A7J1-5	R
12	CFY	A7J1-12	G
6	GND	A7J1-6	R
11	CF8	A7J1-11	K
7	CF SIGN	A7J1-7	B
10	CFX	A7J1-10	G
8	dpc	A7J1-8	N
9	CF CLK	A7J1-9	P

J2

PIN	SIGNAL	TO/FROM	FUNCTION BLOCK
1	NC		
16	CFD5	A2A2J1–16	J
2	CFDf	A2A2J1–2	O
15	CFD4	A2A2J1–15	J
3	CFDg	A2A2J1–3	O
14	CFD3	A2A2J1–14	J
4	CFDe	A2A2J1–4	O
13	CFD2	A2A2J1–12	J
5	CFDd	A2A2J1–5	O
12	CFD1	A2A2J1–12	J
6	NC		
11	CFD0	A2A2J1–11	J
7	CFDdp	A2A2J1–7	O
10	CFDa	A2A2J1–10	O
8	CFDc	A2A2J1–8	O
9	CFDb	A2A2J1–9	O

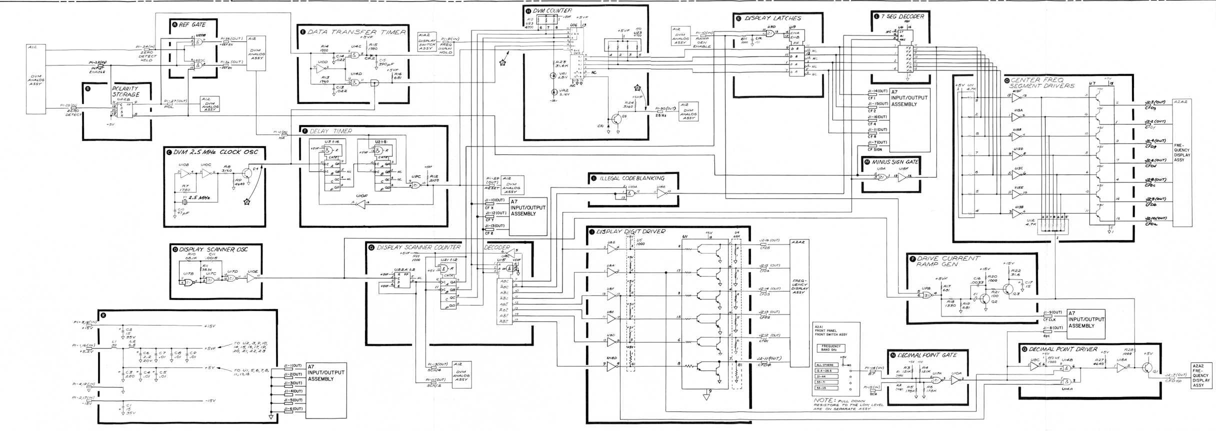

SERIAL PREFIX: 2244A

NOTES:

1. REFERENCE DESIGNATORS WITHIN THIS ASSEMBLY ARE ABBREVIATED. FOR COMPLETE REFERENCE DESIGNATOR, PREFIX WITH ASSEMBLY REFERENCE DESIGNATOR.
2. UNLESS OTHERWISE INDICATED:
   RESISTANCE IN OHMS (Ω)
   CAPACITANCE IN MICROFARADS (μF)
   INDUCTANCE IN MICROHENRIES (μH)
3. UNLESS OTHERWISE INDICATED, DIGITAL IC'S WILL HAVE THE FOLLOWING +5V AND GND CONNECTIONS:

NO. OF PINS ON PACKAGE	+5V	GND
14	14	7
16	16	8
18	18	9

4. MNEMONIC TABLE:

MNEMONIC	DESCRIPTION
CFD 0 THRU 5	CENTER FREQUENCY DIGIT DRIVERS
CFD a THRU g	CENTER FREQUENCY SEGMENT DRIVERS
CFD dp	CENTER FREQUENCY DECIMAL POINT DRIVER
CK	DIGIT STROBE CLOCK
dpc	DECIMAL POINT CONTROL
HA	STATE COUNT "A", ACTIVE HIGH
HCF 0 THRU 5	CENTER FREQUENCY DIGIT ENABLES
LCFD, LCF3	CENTER FREQUENCY DIGIT ENABLES
LCFa THRU g	CENTER FREQUENCY SEGMENT ENABLES
SCN/2	SCAN OSCILLATOR DIVIDED BY TWO
SCN/4	SCAN OSCILLATOR DIVIDED BY FOUR
CF 1	CENTER FREQUENCY BCD BIT 1
CF 2	CENTER FREQUENCY BCD BIT 2
CF 4	CENTER FREQUENCY BCD BIT 4
CF 8	CENTER FREQUENCY BCD BIT 8
CF CLK	CENTER FREQUENCY CLOCK
CF X	CENTER FREQUENCY DIGIT SELECT BIT 1
CF Y	CENTER FREQUENCY DIGIT SELECT BIT 2
CF Z	CENTER FREQUENCY DIGIT SELECT BIT 4
CF SIGN	CENTER FREQUENCY POLARITY

A11

Figure 8-37. A11 DVM Digital Assembly, Schematic Diagram

A12 DVM ANALOG ASSEMBLY, CIRCUIT DESCRIPTION

Figures 8-35 (refer to the A11 circuit description), 8-38 and 8-39 show an overall timing diagram for the Digital Voltmeter (DVM), a block diagram, and a simplified timing diagram. The basic measurement technique is to apply the input voltage to an integrator for a fixed time, charging the integrating capacitor. Then the integrator is given a known voltage of the opposite polarity to discharge the integrating capacitor. The time it takes to discharge the capacitor is proportional to the input voltage and is measured with a precise digital counter. If the magnitude of the input voltage equals the reference voltage, the discharge time will equal the fixed, known charging time.

The designations T_1, T_2, etc., in the timing diagram refer to time intervals, not points in time.

In the block diagram (Figure 8-38), the CENTER FREQ, −REF V, and +REF V (not shown on the schematic) voltages are always present at the inputs to their respective switches. (In the timing diagram, the CENTER FREQ voltage is 12.000V, corresponding to a reading of 12.000 GHz.) At the beginning of T_1, the Input Switch is closed and the CENTER FREQ voltage is applied to the Input Amplifier. During T_1, the Input Amplifier settles so that a stable voltage will be presented to the Integrator Switch. At the beginning of T_2, the Integrator NORM Switch closes, and the integrating capacitor is allowed to charge until the end of T_2, at which time the Input Switch and Integrator Switch are opened and the −REF V Switch is closed. During T_3, the Input Amplifier is again allowed to settle. At the beginning of T_4, the Integrator Switch is again closed, commencing the discharge of the Integrator capacitor. The switch remains closed until the Integrator output reaches 0V. This will happen very quickly for input levels near 0V but will extend into the early part of T_6 for the maximum level corresponding to 22 GHz. After this zero crossing occurs, the Auto Zero function is initiated by the closing of the Auto Zero Switch, the Auto Zero Sampler Switch, and the FAST Integrator Switch. During the Auto Zero time the offset error in the system is placed on the Auto Zero capacitor. At the end of T_6 (beginning of T_1) the Auto Zero function is terminated, but the offset error remains on the Auto Zero capacitor for the duration of the measurement cycle.

The generation of timing signals for the switches and the measurement of the discharge time interval are performed by the digital timing and control circuits in A11 DVM Digital Assembly.

Input Switch Ⓐ

The CENTER FREQ voltage present at the input to the Input Switch is divided by ten by the voltage divider R1, R2 to yield a voltage that has a scale factor of 10.000 GHz per volt. This voltage is transferred to the Input Amplifier during T_1 and T_2 by the FET switch Q11. During T_1 and T_2 a TTL low on the INPUT ENABLE line turns on the switch driver Q14 and CR1 is then back-biased. The gate of Q11 is held at the input level, since R7 is tied to a feedback divider R39, R40, which in turn is tied to the output of the Input Amplifier. During T_3 through T_6, the INPUT ENABLE goes high, turning off Q14, which causes CR1 to conduct, turning Q11 off.

Reference Switches Ⓑ

The operation of the Reference Switches is similar to that of the Input Switch. If the CENTER FREQ voltage is positive, the digital control circuits will cause the negative reference switch to conduct; if the input is negative, the positive reference switch will conduct. In both cases, the switches will conduct from the beginning of T_3 until the integrator passes through zero. Since negative input voltages need to be measured accurately, the positive 1.0V reference is simply derived from a voltage divider off the +5V supply. The positive input voltage must be very precisely measured; therefore, the −1.0V reference is derived from an external −10V reference supply. R18 through R22 divide the −10V down to 1.0V and allow for a small adjustment around −1.0V.

Auto Zero Switch Ⓒ

This switch is similar to the other switches except that it is simplified by the fact that it must switch only a 0V level. It is turned on by the digital control circuits after the Integrator has reached 0V output. This can occur during T_4, T_5, or the first part of T_6. It is turned off at the end of T_6 regardless of when it was turned on.

Input Amplifier (E)

The Input Amplifier is a high input impedance, dc amplifier with a voltage gain of approximately 3.5. The current from the dual-input FET Q9 is supplied by current source Q8 and is balanced by INPUT BAL potentiometer R37. The output of the amplifier supplies the signal to the Integrator Switch circuit; it also supplies the feedback voltage for the Input and Reference FET switches. The gain of this amplifier need not be precisely set, since only the ratio of the input and reference voltages must be preserved, not their actual levels.

Integrator Switch (F)

There are two FET switches in the Integrator Switch circuit. The "normal" switch Q3 is used during the normal measurement cycle, while the "fast" switch Q4 is used to speed up the response of the Auto Zero cycle. Since the Integrator resistors R30 and R31 are placed before the switches, the switches need only pass signals very near ground level, simplifying the switch drivers. Logic gates U6B, U6C, and U7D act as a decoder to turn on the "normal" switch Q3 during T_2, and the discharge period of the integrator. The "fast" switch Q4 uses the same driver as the Auto Zero Switch and is on from the time the integrator crosses zero until the end of T_6.

Integrator (G)

The Integrator consists of dual-FET input stage Q5, op amp U2, and integrating capacitor C9. The charging current for C9 is equal to the current into the integrator, which is determined by the output of the Input Amplifier and either resistor R30 or R31. The non-inverting input to the integrator is not grounded, as would be expected, but instead is tied to the error voltage stored on the Auto Zero capacitor C21.

Slope Amplifier X100 (I)

The Slope Amplifier X100 circuit consists of two stages (U3 and U4), each having a gain of 10. The U3 output must be free of noise and thus has heavy power-supply filtering (L1, L2, and C15). The U4 output is clamped to ±1.2V by diodes CR7 through CR10 so that it will recover rapidly from an overload. The output of the Slope Amplifier X100 circuit will change only when the integrator output is near 0V; otherwise, it will be clamped to ±1.2V.

Zero Detect Comparator (J)

The Zero Detect Comparator is a high-speed voltage comparator that has an output compatible with TTL logic. In order to accommodate small system offsets, the exact voltage level that will cause a transition of the output is adjusted with the ZERO ADJ potentiometer R56. The HYST adjustment R53 feeds a portion of the input amplifier output to the comparator. It is made necessary by the fact that the integrating capacitor has dielectric absorption. To eliminate this effect, the discharge time measurement is actually started 42 μsec after the beginning of T_4. (This is done by the Delay Timer circuit in A11 DVM Digital Assembly.) To compensate for this delay, a portion of the reference voltage present at the time of the discharge zero crossing is applied to the comparator through resistors R52, R53, and R55. The level is adjusted by R53.

Zero Detect Gates (K)

The Zero Detect Gates cause either polarity of zero crossing of the integrator to generate the same polarity logic transition, and they ensure that only the discharge zero crossing is recognized by the following logic. The POL line (U6A pin 1) from A11 DVM Digital Assembly indicates which reference polarity was used for the present measurement cycle. (A low indicates that +REF V was used, and vice versa.) This signal, in conjunction with the comparator output, causes the output of U6A to always have a low-to-high transition for the discharge zero crossing. U9B inverts the discharge transition and causes the opposite transition to always occur at the beginning of T_1.

The TEST-NORM switch is a troubleshooting aid. The TEST position simulates a zero crossing at the beginning of T_5 to generate a normal sequence of logic levels to the FET switch drivers. This will be recognized by the logic circuitry as −10.000 on the FREQUENCY GHz readout.

Zero Detect Catcher (L)

Since the reference voltage is removed when the discharge zero crossing occurs, the output of the comparator may oscillate following the first transition. The Zero Detect Catcher latches after the initial high/low transition. The latch is reset at the beginning of T_1 and remains high until the next valid discharge zero crossing.

State Counter (D)

The State Counter consists of three D flip-flops which generate signals HA, HB, and HC. Signal HA is used to generate signal HB, and signal HB is used to generate signal HC. The inverse of signal HC (i.e., LC) is then used to produce a signal HA (via gates U7C and U9C). The various combinations of signals HA, HB, and HC determine the "state code" of the instrument timing. State codes 101 and 010 are illegal and will be entered only if caused to do so by transient pulses during initial turn-on. If an illegal state is entered, the flip-flops will be cleared on the next reset pulse. This sets the counter to state 000, at which time an Auto Zero cycle occurs. The timing sequence then continues in its normal fashion.

Display Ramp Generator Transition Gate (M)

This gate is functionally part of A11 DVM Digital Assembly, although it is physically located on the A12 board. Refer to the circuit description of the Drive Current Ramp Generator (A11 DVM Digital Assembly).

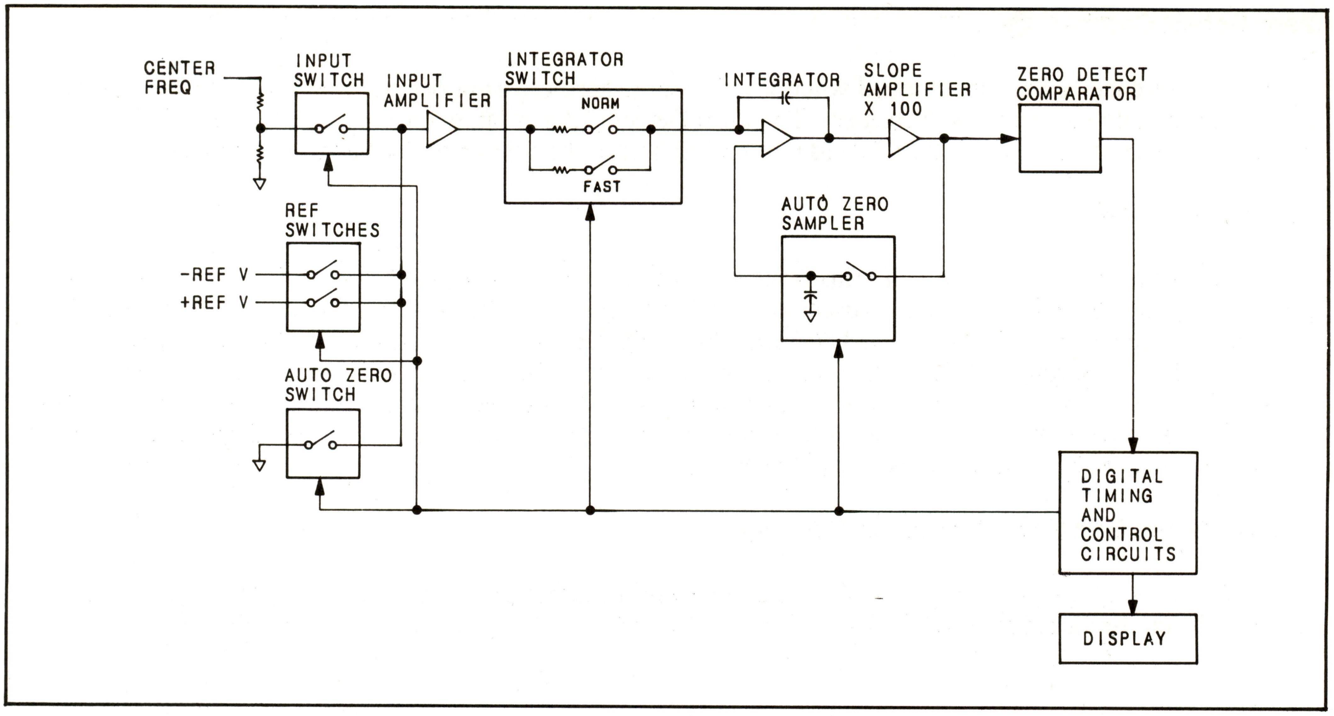

Figure 8-38. DVM Analog Assembly, Simplified Block Diagram

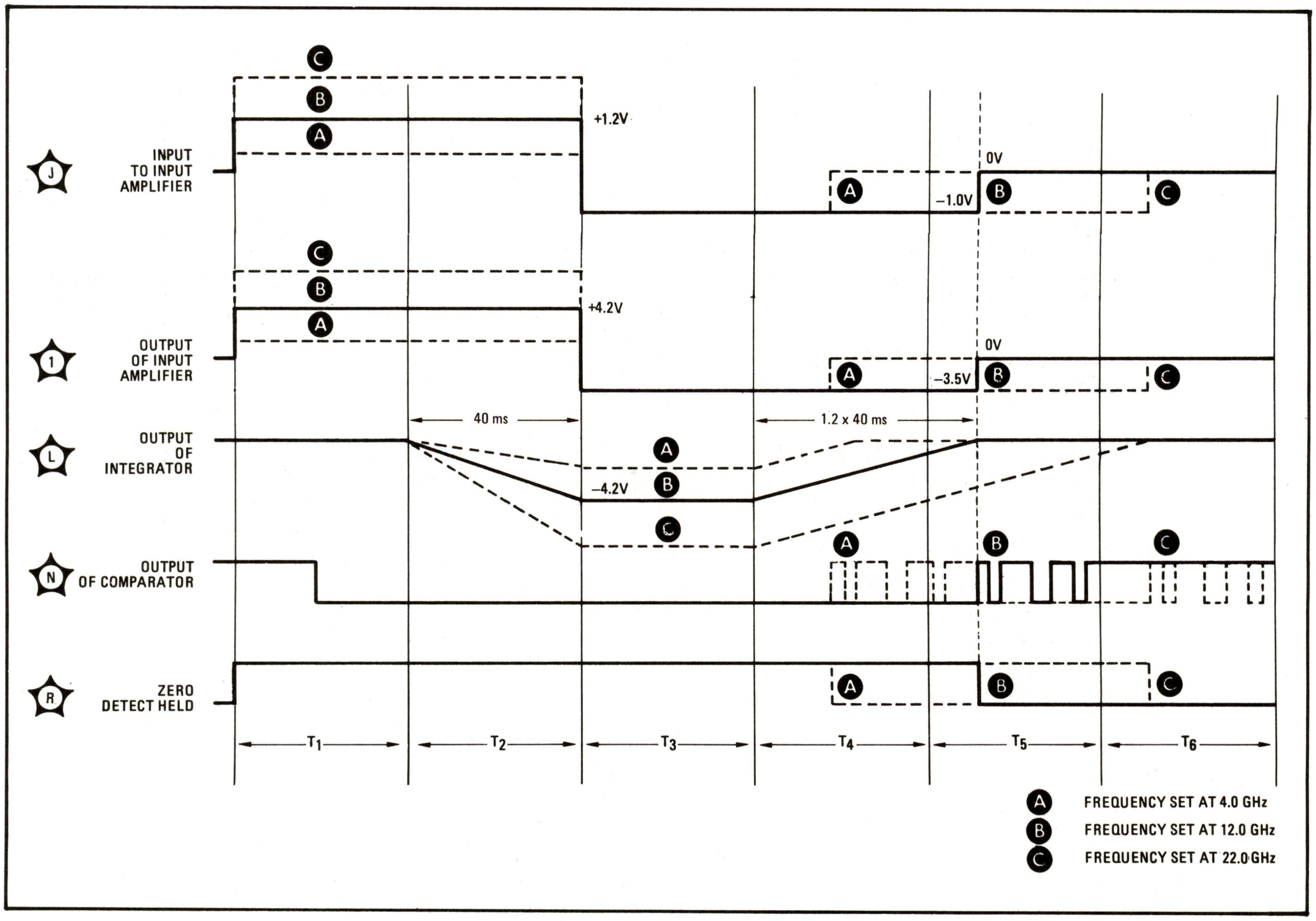

Figure 8-39. DVM Analog Assembly, Simplified Timing Diagram

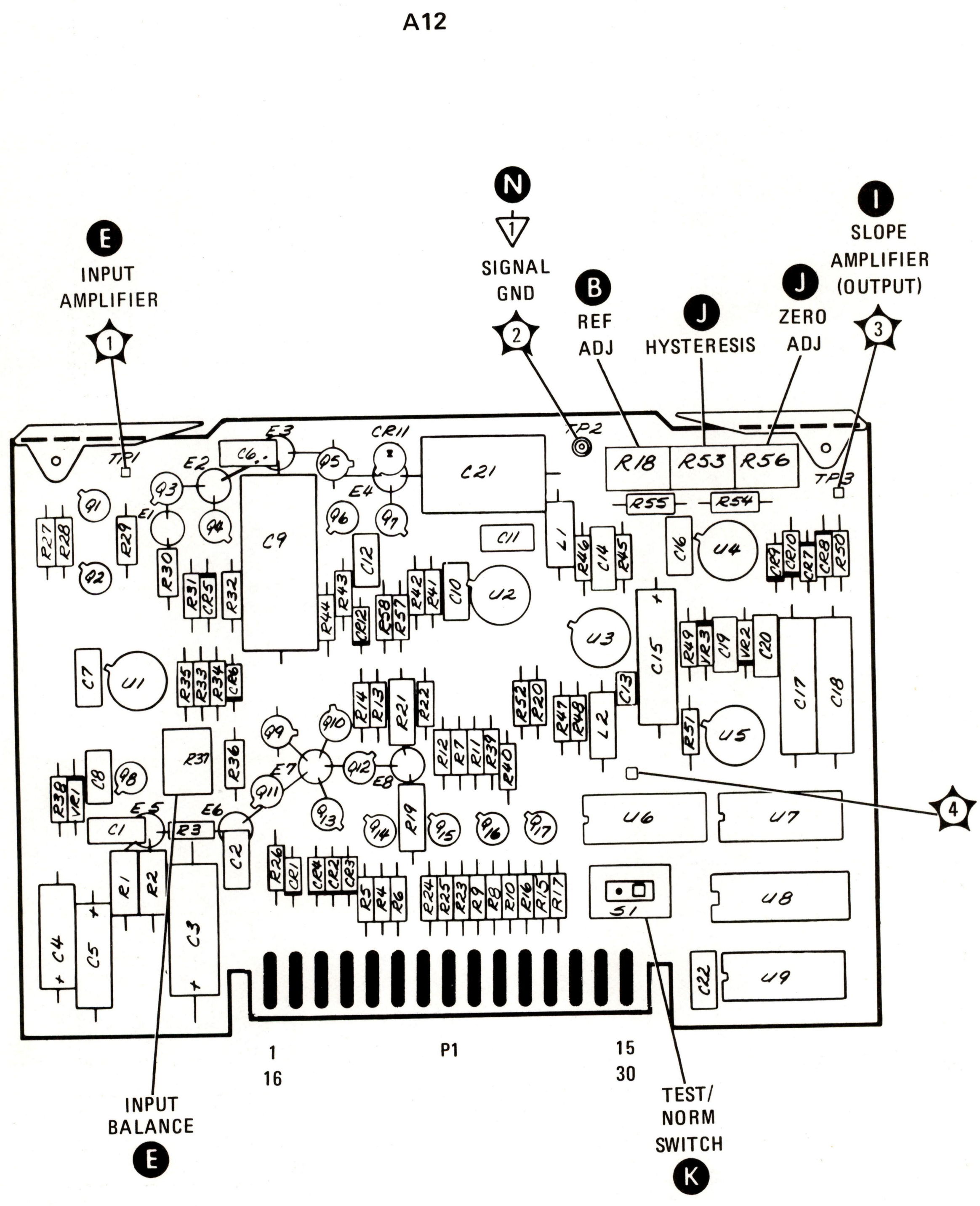

Figure 8-40. A12 DVM Analog Assembly, Component Locations

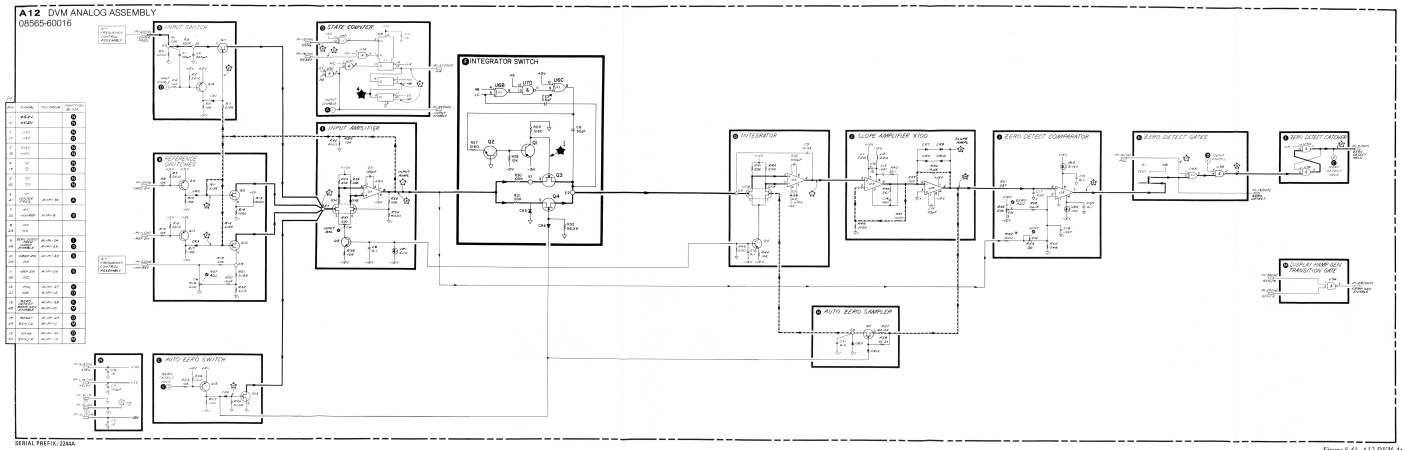

SERIAL PREFIX: 2244A

NOTES

1. REFERENCE DESIGNATORS WITHIN THIS ASSEMBLY ARE ABBREVIATED. FOR COMPLETE DESIGNATOR, PREFIX WITH ASSEMBLY REFERENCE DESIGNATOR.
2. UNLESS OTHERWISE INDICATED:
   RESISTANCE IN OHMS (Ω)
   CAPACITANCE IN MICROFARADS (μF)
   INDUCTANCE IN MICROHENRIES (μH)
3. ALL INPUTS AND OUTPUTS INTERFACE WITH THE A11 DVM DIGITAL ASSY EXCEPT FOR CENTER FREQ AND –10V REF.
4. UNLESS OTHERWISE INDICATED DIGITAL IC'S WILL HAVE THE FOLLOWING +5V AND GND CONNECTION

NO PINS ON PKG	+5V	GND
14	14	7
16	16	8

5. 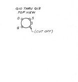

A12

Figure 8-41. A12 DVM Analog Assembly, Schematic Diagram

A13 RELAY DRIVER ASSEMBLY, CIRCUIT DESCRIPTION

A13 Relay Driver Assembly receives input from the SIG IDENT and FREQUENCY BAND GHz switches on the front panel. A RETRACE BLANK signal from A16 Sweep Generator Assembly is used during the signal identification. The Relay Driver controls coaxial RF switches K1 through K5 and provides a means to identify a displayed signal by controlling the frequency of the local oscillator in A37 Third Converter Assembly.

Signal Identifier Ⓐ

The Signal Identifier shifts the displayed signal (except for the 100 MHz CAL signal) 2 MHz to the left on alternate sweeps when the front-panel SIG IDENT button is pressed. The flip-flop U1 is enabled by a high preset signal at pin 4 and is toggled on alternate sweeps by the RETRACE BLANK input. The output of U1 selects a crystal offset in A37 Third Converter Assembly. The crystal for the correct offset is selected by the frequency band inputs B5, B6, and BEM. The F3 + line is enabled and is switched in when B5, B6, or BEM turns on Q6, and U1 toggles. A low at Q6 collector pulls the base of Q1 down, disabling the U1 input to Q1. At the same time, Q6 low drives Q5 high, enabling the U1 input to Q2, which in turn drives the F3 + line.

When bands B5 through B10 are not selected, Q6 collector is high, enabling Q1, and shorting Q2 base to ground through Q5. Q6 then drives the F3 − line.

When the Signal Identifier is not enabled by the front-panel switches, the output of U1 (pin 5) is driven high by a low at the preset input. This high output turns on Q4, driving the F3 line low.

Relay Driver Ⓑ

The Relay Driver accepts signals from the front-panel FREQUENCY BAND GHz push buttons and activates the EXT MIXER RELAY, the IF RELAY or the RF RELAY lines. When B1 is selected, both Q9 and Q10 are turned on, activating the IF RELAY and RF RELAY lines, which energize RF switches K1, K2, K4, K5 and the Second Converter. When in the EXT MIXING mode (bands B7 through B10) the BEM line is high so Q8 is turned on, activating the EXT MIXER RELAY line, which energizes RF switch K3.

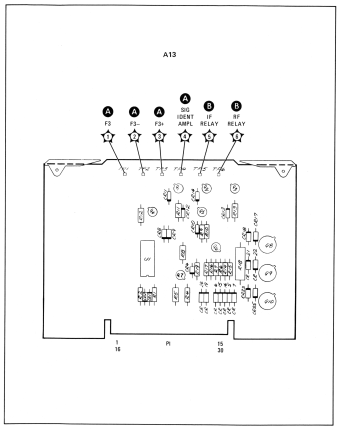

Figure 8-42, A13 Relay Driver Assembly, Component Locations

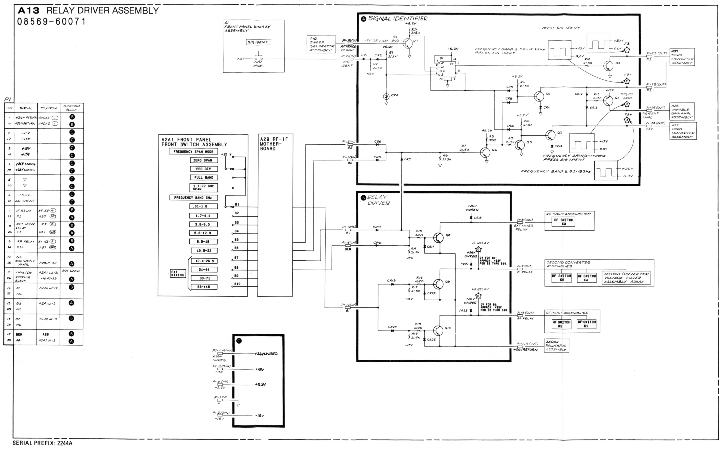

NOTES

1. REFERENCE DESIGNATORS ARE ABBREVIATED. FOR COMPLETE DESIGNATOR PREFIX WITH ASSEMBLY REFERENCE DESIGNATOR.
2. UNLESS OTHERWISE INDICATED: RESISTANCE IN OHMS (Ω).
3. SIGNAL LEVELS AND TESTPOINT WAVEFORMS ASSUME THE FOLLOWING SETTINGS:
   GREEN (NORMAL) SETTINGS
   FREQUENCY BAND: .01–1.8 GHz
   FREQUENCY SPAN/DIV: 1 MHz
   SIG IDENT: ON
4. FREQUENCY BANDS:

FREQUENCY BAND GHZ	BAND LINE	HARMONIC NUMBER
.01-1.8	B1	N=1
1.7 - 4.1	B2	N=1
3.8 - 8.5	B3	N=2
5.8 - 12.9	B4	N=3
8.5 - 18	B5	N=4
10.5 - 22	B6	N=5
12.4 - 26.5	B7	N=6
21 - 44	B8	N=10
33 - 71	B9	N=16
53 - 115	B10	N=26

Figure 8-43. A13 Relay Driver Assembly, Schematic Diagram

A14 TUNING STABILIZER CONTROL ASSEMBLY, CIRCUIT DESCRIPTION

A14 Tuning Stabilizer Control Assembly contains circuits which tune the YIG-Tuned Oscillator (YTO) over a frequency range of approximately 21 MHz. Tuning is accomplished by controlling current, which is proportional to frequency, in the YTO Tickler Coil. There are three signals which can vary the YTO frequency as controlled by the Tickler Coil: the FINE TUNE signal, the TICK ATTEN SWP signal for narrow frequency spans (1 kHz/DIV to 2 MHz/DIV), and the ERROR signal from A36 Tuning Stabilizer Assembly. Two correction circuits process the signals which control the Tickler Coil. These circuits send center frequency and YTF frequency correction signals to A17 Frequency Control Assembly.

Also on this board are the tuning stabilizer control circuits that are used only in the AUTO STABILIZER mode. In stabilized operation, the YTO, which is the first LO, is locked to a 1 MHz Voltage-Controlled Crystal Oscillator (VCXO). These circuits are the Control Generator, Error Amplifier, Sample and Hold, VCXO Sweep Inverter, VCXO Sweep Driver, and VCXO Sweep Buffer.

The capacitors across the inputs of U1, U2, U4, U5, U6, U7, and U8 reduce the susceptibility of these op amps to external RF interference.

Tickler Sweep + Tune Summer (C)

Three signals are summed at op amp U4, which is connected as an inverting summing amplifier: the FINE TUNE signal from the FINE TUNING control at the front panel, the TICK ATTEN SWP from A15 Sweep Attenuator Assembly, and the −10V REF voltage from A17 Frequency Control Assembly. The −10V REF offset voltage is summed so that the sweep at the output of U4 will be centered at 0V when the FINE TUNING control is set at mid-position. This stage has an inverting gain of 2 for the TICK ATTEN SWP signal. R42 and C8 filter out noise on the FINE TUNE line. The output of this stage goes to both the Tickler Coil Predriver and to the VCXO Sweep Inverter, the latter being used only for stabilized operation.

Tickler Coil Predriver (F)

The main input to the Tickler Coil Predriver is the output from the Tickler Sweep + Tune Summer. Op amp U7 is connected as an inverting amplifier with a nominal inverted gain of 0.67. The TICK SWP adjustment R57 adjusts the gain of this stage to compensate for differences in the tuning sensitivity of the YTO Tickler Coil. It is adjusted to give the correct span for the narrow frequency spans (1 kHz/DIV to 2 MHz/DIV) for unstabilized operation. For unstabilized operation, FET 2 SWITCH Q23 is turned off. Once stabilization is completed, this FET stays on for stabilized operation. With this FET on, the output from the Error Amplifier is summed into the Tickler Coil Predriver. This is the path by which the ERROR signal from A36 Tuning Stabilizer Assembly is fed back to the YTO to effect changes in its frequency.

Tickler Coil Driver (J)

The Tickler Coil Driver produces current proportional to its input voltage. This current drives the Tickler Coil of A31 YIG-Tuned Oscillator (YTO) Assembly.

Op amp U2 is basically an inverting, unity gain amplifier. The voltage is sensed differentially across R82 with negative feedback through R78 and a slight amount of positive feedback through R81.

R89 and C19 form a 16 kHz low-pass filter which reduces the higher frequency noise applied to the YTO Tickler Coil. Q17 and Q18 increase the current capability (about 55 mA) for driving the YTO Tickler Coil. When the current through R79, which is in series with the positive power input to U2, reaches approximately 5 mA, there is 0.5V across the base-emitter of Q18, which turns it on slightly, providing additional current to the output for positive voltages. As the current requirement increases, the voltage across R79 increases, and Q18 provides a larger proportion of the current. Q17 functions in the same way for the negative output voltages.

Center Frequency Correction Summer (G)

The output of the Center Frequency Correction Summer, CENTER FREQ CORRECT, goes to A17 Frequency Control Assembly. Three signals are summed at op amp U3A: The FINE TUNE signal from the front-panel

FINE tuning control, the FREQ CAL signal from the front-panel FREQ CAL adjustment, and the output of the Error Amplifier. When the analyzer is in the stabilized mode, if the coarse TUNING control is accidentally moved slightly, an output from the Error Amplifier is generated. The resulting change of the CENTER FREQ CORRECT output of U3A corrects the FREQUENCY GHz readout on the front panel so that it does not change. When the analyzer is in the stabilized mode, if the coarse TUNING control is moved slightly, the lock loop will prevent the YTO frequency from shifting.

YTF Correction Attenuator ❶

Op amp U3B is connected as an inverting, unity gain amplifier with a gain of 0.2. The YTF CORRECT output signal goes to A17 Frequency Control Assembly where this signal (proportional to the frequency change in the YTO caused by the Tickler Coil) is added to the YTO FREQ ANALOG signal (proportional to the frequency change in the YTO caused by the Main Coil) so that the YTF will track with the YTO. The YTF CORRECT signal has a maximum effect on the YTF frequency of ±10.5 MHz.

Control Generator Ⓐ

The Control Generator generates a series of timing pulses to trigger events necessary to accomplish AUTO STABILIZER lock of the YTO, which is the first LO in the analyzer. (See Figure 8-44.) When the analyzer controls are changed from unstabilized to stabilized settings, the TUNE STAB line is activated (+15V) and the timing pulse train, which lasts for about 430 msec, is initiated. The analyzer settings for stabilized mode are: AUTO STABILIZER on (push button out) with analyzer in ZERO SPAN mode, or PER DIV mode with FREQUENCY SPAN/DIV set to 100 kHz/DIV or less (the blue numbered region). When in the stabilized mode, the STABILIZED FINE TUNE ONLY LED is lit. Once the Control Generator has generated a train of pulses and the YTO is stabilized, another train will be generated only if the stabilizer is turned off and back on again.

When the last of the three series-connected switches is closed (FREQUENCY SPAN/DIV, FREQUENCY SPAN MODE, or AUTO STABILIZER), +15V is applied to the TUNE STAB line and the stabilization process begins at this time, t_0. At this instant, the +15V turns on Q1, which turns on Q2 (+20V switch), applying +20V to A36 Tuning Stabilizer Assembly to turn on the VCXO Pulse Amplifier. At the same time, the +20V from Q2 turns off Q10, which then turns on Q9 (Zero Span Driver) to activate the ZERO line (+15V). The ZERO signal goes to A15 Sweep Attenuator Assembly to put the analyzer in Zero Span mode. This removes sweep from the YTO during the stabilization process. The +15V on the TUNE STAB line charges C1 through R2, turning on Delay 1 transistors Q3 and Q4 30 msec after the TUNE STAB line is activated.

At this time (t_1), the output from Q4 goes to FET 1 Switch Driver Q16, turning it off. FET 1 Switch Q19, part of the Error Amplifier, has been on, shorting the signal to ground. It is turned off by the −15V from the FET 1 Switch Driver. The ERROR AMPL signal from the Error Amplifier is passed through the closed contacts of reed relay K1, through the Sample and Hold, VCXO Sweep Driver, and VCXO Sweep Buffer circuits to the VCXO in A36 Tuning Stabilizer Assembly. This signal causes the VCXO to shift frequency, locking a VCXO harmonic to the YTO frequency. The +15V from Q4 charges C2 through R6, turning on Delay 2 transistors Q5 and Q6 300 msec after t_1.

At this time (T_2), the +15V output from Q6 turns off Relay Driver Q7, which removes the ground return for relay K1. This opens K1, leaving the ERROR AMPL signal, which was present just before time t_2, stored on C11. The +15V from Q6 charges C3 through R10, turning on Delay 3 transistors Q15 and Q14 30 msec after t_2.

At this time (t_3), +15V from Q14 turns off Q8, which then turns FET 1 Switch Driver Q16 back on. The +15V from Q16 then turns FET 1 Switch Q19 on again to discharge C7 in the Error Amplifier and A36A1C17 in A36 Tuning Stabilizer Assembly. The +15V from Q14 charges C4 through R15, turning off Delay 4 transistor Q13 30 msec after t_3.

At this time (t_4), the signal from Q13 turns Q8 on again, which then turns off FET 1 Switch Driver Q16. This then turns FET 1 Switch Q19 off again. At the same time FET 2 Switch Driver Q12 is also turned on, and +15V is applied to FET 2 Switch Q23, turning it on. The ERROR AMPL signal is now routed to the YTO

TIMING SUMMARY	
t_0	The stabilization process is initiated by changing the analyzer controls from unstabilized to stabilized settings. The VCXO Pulse Amplifier is turned on and the sweep is shut off by activation of the ZERO line.
t_1	FET 1 Switch, which has been on, shorting the ERROR signal to ground, is turned off. The ERROR AMPL signal is allowed to pass through the closed contacts of K1, through the Sample and Hold circuit, VCXO Sweep Driver, and VCXO Sweep Buffer to the VCXO. This signal causes the VCXO to shift frequency to move a harmonic lock point to the YTO frequency.
t_2	Relay K1 opens leaving the ERROR AMPL signal, which was present just before t_2, stored on the capacitor C11.
t_3	FET 1 Switch is turned on again to discharge A36A1C17 at the output of the Discriminator and C7 in the Error Amplifier.
t_4	FET 1 Switch is again turned off and FET 2 Switch is turned on, routing the ERROR AMPL signal to the Tickler Coil Predriver, where it controls the YTO frequency.
t_5	The ZERO line is turned off causing the sweep to be resumed. The stabilization process is now completed with the analyzer in the stabilized mode.

Figure 8-44. Control Generator Timing Diagram (1 of 2)

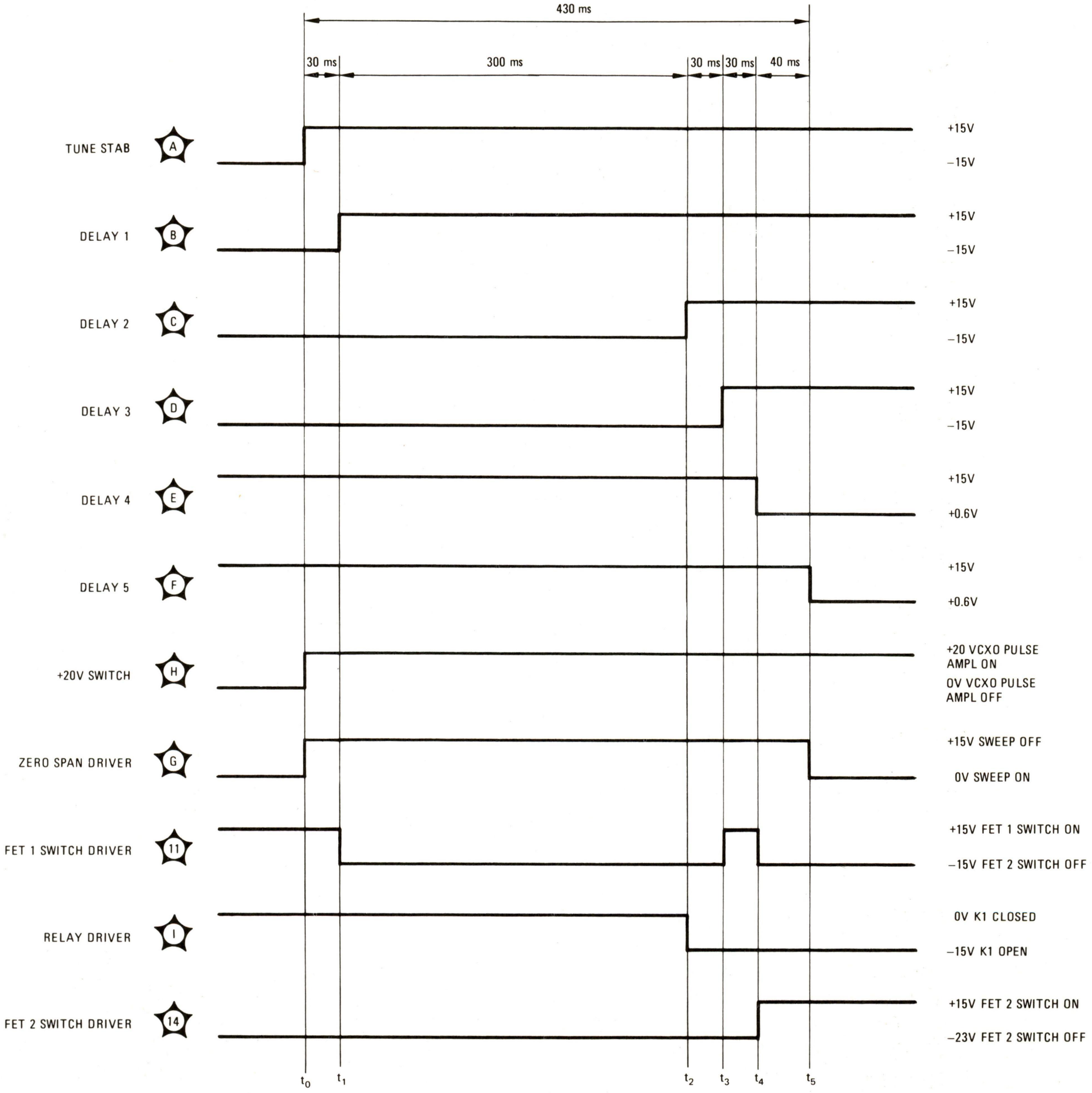

Figure 8-44. Control Generator Timing Diagram (2 of 2)

Tickler Coil Predriver, where it controls the YTO frequency. The +15V from Q12 charges C5 through R28, turning on Delay 5 transistor Q11 40 msec after t_4.

At this time (t_5), Q10 is turned back on, which turns off Zero Span Driver Q9. The ZERO line no longer has +15V applied to it by Q9, and the sweep is turned back on (unless the front-panel ZERO SPAN mode push button is depressed). The analyzer is now in the stabilized mode.

Error Amplifier Ⓑ

The input to the Error Amplifier is the ERROR signal from the Discriminator in A36 Tuning Stabilizer Assembly. Op amp U5 is connected as an inverting amplifier with a gain of 3.16 at dc and low frequencies. R38 and C7 decrease the gain at higher frequencies to compensate for the frequency response of the stabilizer lock loop. The ERROR signal is nominally at 1 Vdc immediately after the YTO is stabilized. There is some ac signal present, corresponding to the FM which is being eliminated at the YTO. The ERROR signal has a sensitivity of +0.46V per MHz of correction for the fundamental of the YTO. This sensitivity is divided by the harmonic number N for the higher frequency bands, which use harmonic mixing. When the analyzer is not in the stabilized mode, and also at the time interval t_3 to t_4 during the stabilization process, FET 1 Switch Q19 is turned on, shorting the ERROR signal to ground.

Sample and Hold Ⓓ

This circuit samples and holds the ERROR AMPL signal. With reed relay K1 closed, the ERROR AMPL signal from the output of the Error Amplifier is applied to the storage capacitor C11. At time t_2 during the stabilization process, K1 is opened and remains open unless the AUTO STABILIZER is turned off and back on again. C11 has a very high leakage resistance, and MOSFET Q20 has very high input resistance. This means that the voltage on C11 will be maintained with little change for a long time. Q20 is connected as a source follower to monitor the voltage on the storage capacitor C11. Q21 is used to bias Q20 such that the source to drain voltage is maintained nearly constant regardless of variations in output voltage at TP12. The output of this stage goes to the VCXO Sweep Driver.

VCXO Sweep Inverter Ⓔ

This stage inverts the TICK S + T signal from the Tickler Sweep + Tune Summer so it is the correct polarity for input to the VCXO Sweep Driver. Op amp U8 is connected as an inverting amplifier with an inverted gain of 1.62.

VCXO Sweep Driver Ⓗ

The VCXO SWP output from this stage goes to the 2/F potentiometer which is ganged to the coarse TUNING potentiometer at the front panel. The 2/F VCXO SWP signal goes to the VCXO Sweep Buffer. The output of the VCXO Sweep buffer, .4/F VCXO SWP, goes to the VCXO Sweep Varactor Driver in A36 Tuning Stabilizer Assembly. The VCXO Sweep Driver has two inputs. One input is the voltage from the Sample and Hold circuit. The other input, from the VCXO Sweep Inverter, is an inverted and amplified version of the TICK S + T signal at the output of the Tickler Sweep + Tune Summer. This signal provides the FINE tuning and sweep for the stabilized mode, for if the TICK S + T signal were applied only to the Tickler Coil Driver, the stabilization loop would hold the frequency constant. In stabilized operation, the TICK S + T signal is still applied to the Tickler Coil Driver, so that the ERROR voltage does not need to provide the FINE tune and sweep ramp.

The FET OFFSET potentiometer R68 is adjusted to compensate for the offset introduced by FET Q20. R64 and C14, with R65, provide frequency compensation for the lock loop during the interval from t_1 and t_2 of the stabilization process, when the VCXO is momentarily locked to the YTO. Op amp U1 is connected as an inverting amplifier. It has a nominal inverted unity gain for the Sample and Hold output signal and a nominal inverted gain of 5.1 for the output of the VCXO Sweep Inverter. The VCXO SWP potentiometer R71 is adjusted to provide the proper frequency spans in stabilized operation.

VCXO Sweep Buffer (K)

The input to this stage (2/F VCXO SWP) comes from the 2/F potentiometer ganged with the coarse TUNING potentiometer at the front panel. The resistance put in this line by the 2/F potentiometer increases as the YTO frequency is increased. For a higher YTO frequency, the YTO is locked to a higher harmonic of the 1 MHz VCXO. The 2/F potentiometer, with R74 and R73, attenuates the signal applied to the VCXO such that a given VCXO SWP voltage causes the same movement of the VCXO harmonic to which the YTO is locked, regardless of its harmonic number. For FREQUENCY BAND GHz .01 – 1.8, the B1 line is activated (+15V) and Q22 is turned off so that R73 does not shunt R74. This gives less attenuation range to the 2/F potentiometer, which is necessary for this band as the coarse TUNING control has less YTO tuning range. For the harmonic mixing bands, this sensitivity is divided by the harmonic N.

TUNING STABILIZER SYSTEM, CIRCUIT DESCRIPTION

A14 Tuning Stabilizer Control Assembly and A36 Tuning Stabilizer Assembly are closely related and together form the Tuning Stabilizer System.

The Tuning Stabilizer system locks the first local oscillator (LO), which is a YIG-Tuned Oscillator (YTO), to a harmonic of a 1 MHz crystal oscillator to reduce the residual FM of the first LO. Stabilized operation is permitted for narrow frequency spans (1 kHz/DIV to 100 kHz/DIV) and for ZERO SPAN mode.

Figure 8-45 is a simplified block diagram of the Tuning Stabilizer system. The lock loop can be considered as an IF-type Automatic Frequency Control (AFC) system. The sampler functions as a mixer with the first LO signal as one input and the harmonic of the 1 MHz oscillator as the other input. The 2460 harmonics between 2.0 and 4.46 GHz are mixed with the first LO signal in the Sampler. The Sampler output contains the sum and difference frequencies of the two inputs. The output is filtered by a 500 kHz low-pass filter, so only the difference between the LO signal and the nearest 1 MHz harmonic need be considered. The first LO signal can never be more than 500 kHz away from one of the harmonic pulses, so there will always be an output from the filter. The output from the filter is applied to a Discriminator that produces an output voltage related to frequency. (See the Discriminator block in Figure 8-45.)

The error signal from the Discriminator is fed through a Compensation Amplifier and combined with the Tickler Sweep + Fine Tune signal. This signal is then applied to the YTO, causing the YTO frequency change, producing a near-zero ERROR signal. This means that the YTO frequency will differ from a 1 MHz harmonic by approximately 240 kHz, as shown below:

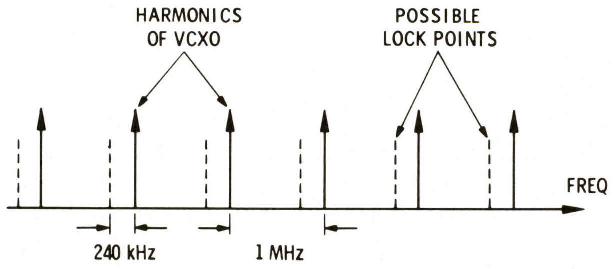

The frequency is approximate because this is an AFC system with a finite loop gain of 1000. When lock is accomplished, if the YTO has to move 100 kHz to lock to a VCXO harmonic, the Discriminator has to provide an ERROR voltage to do this; and the difference frequency will differ from 240 kHz by 100 Hz.

To avoid a center frequency shift in the display when the Tuning Stabilizer System is actuated, the AFC roles of the 1 MHz VCXO and the YTO are initially reversed. The ERROR signal initially is sent to the VCXO (shift

position 1). In this connection, the YTO rather than the VCXO functions as the reference; the VCXO frequency shifts, locking to the YTO frequency. After a fixed time, the ERROR signal is sent to the VCXO instead of the YTO (switch position 2), locking the YTO to a stable VCXO. The ERROR signal that shifted the VCXO frequency to the YTO frequency is stored on a capacitor in the Sample and Hold circuit.

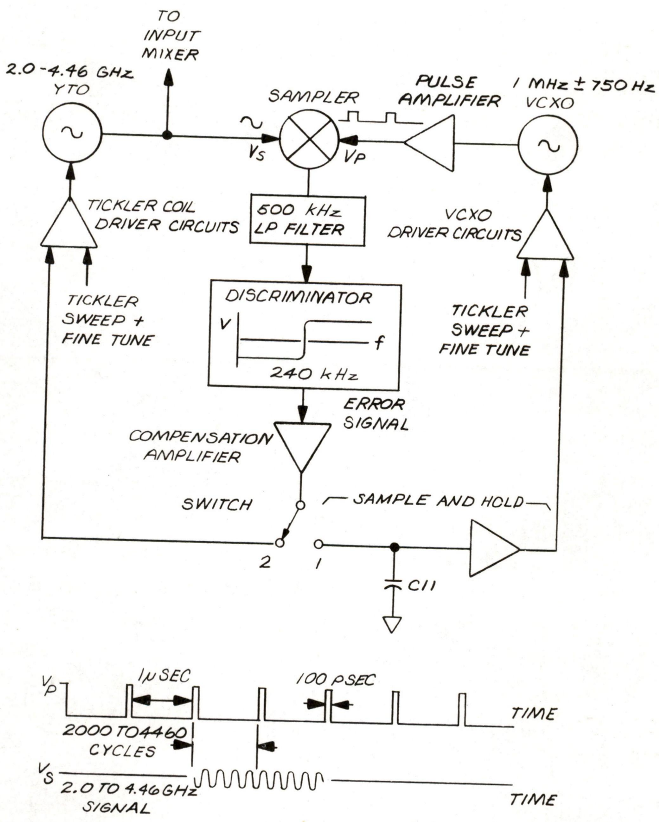

Figure 8-45. Tuning Stabilizer System, Simplified Block Diagram

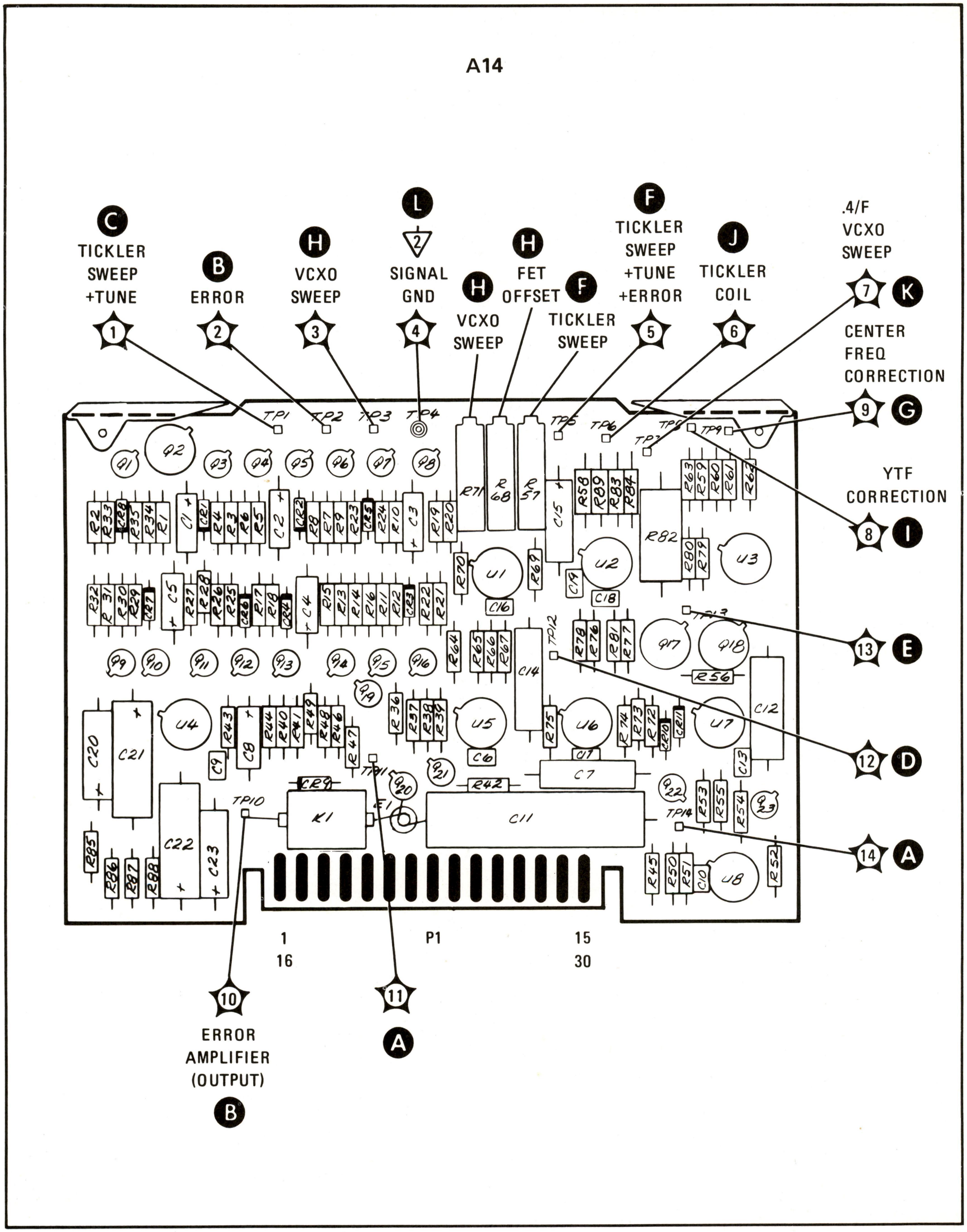

Figure 8-46. A14 Tuning Stabilizer Control Assembly, Component Locations

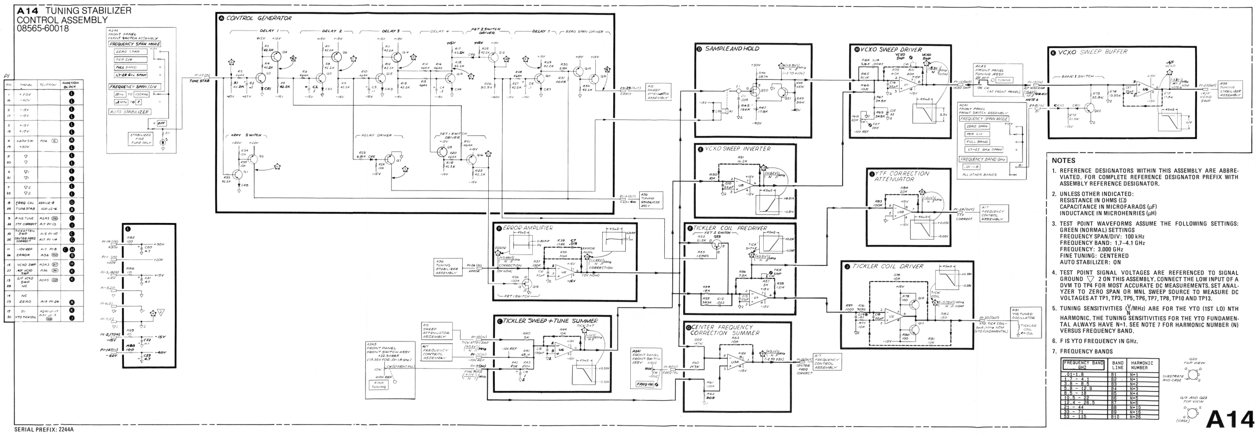

NOTES

1. REFERENCE DESIGNATORS WITHIN THIS ASSEMBLY ARE ABBREVIATED. FOR COMPLETE REFERENCE DESIGNATOR PREFIX WITH ASSEMBLY REFERENCE DESIGNATOR.
2. UNLESS OTHER INDICATED:
   RESISTANCE IN OHMS (Ω)
   CAPACITANCE IN MICROFARADS (μF)
   INDUCTANCE IN MICROHENRIES (μH)
3. TEST POINT WAVEFORMS ASSUME THE FOLLOWING SETTINGS:
   GREEN (NORMAL) SETTINGS
   FREQUENCY SPAN/DIV: 100 kHz
   FREQUENCY BAND: 1.7–4.1 GHz
   FREQUENCY: 3.000 GHz
   FINE TUNING: CENTERED
   AUTO STABILIZER: ON
4. TEST POINT SIGNAL VOLTAGES ARE REFERENCED TO SIGNAL GROUND ▽ 2 ON THIS ASSEMBLY. CONNECT THE LOW INPUT OF A DVM TO TP4 FOR MOST ACCURATE DC MEASUREMENTS. SET ANALYZER TO ZERO SPAN OR MNL SWEEP SOURCE TO MEASURE DC VOLTAGES AT TP1, TP3, TP5, TP6, TP7, TP8, TP10 AND TP13.
5. TUNING SENSITIVITIES ($\frac{V}{N}$/MHz) ARE FOR THE YTO (1ST LO) NTH HARMONIC. THE TUNING SENSITIVITIES FOR THE YTO FUNDAMENTAL ALWAYS HAVE N=1. SEE NOTE 7 FOR HARMONIC NUMBER (N) VERSUS FREQUENCY BAND.
6. F IS YTO FREQUENCY IN GHz.
7. FREQUENCY BANDS

FREQUENCY BAND GHZ	BAND LINE	HARMONIC NUMBER
.01-1.8	B1	N=1
1.7 - 4.1	B2	N=1
3.8 - 8.5	B3	N=2
5.8 - 12.9	B4	N=3
8.5 - 18	B5	N=4
10.5 - 22	B6	N=5
12.4 - 26.5	B7	N=6
21 - 44	B8	N=10
33 - 71	B9	N=16
53 - 115	B10	N=26

A14

Figure 8-47. A14 Tuning Stabilizer Control Assembly, Schematic Diagram

A15 SWEEP ATTENUATOR ASSEMBLY, CIRCUIT DESCRIPTION

A15 Sweep Attenuator Assembly contains the circuits which attenuate the sweep ramp, 1/N SWP, from A16 Sweep Generator Assembly to provide the different frequency spans as selected by the FREQUENCY SPAN/DIV control. For wide frequency spans (5 MHz/DIV to 500 MHz/DIV) the 1/N SWP signal is attenuated and applied to A17 Frequency Control Assembly, where it is summed with the voltage from the TUNING control. The signal then goes to A19 YIG Driver Assembly, which applies current to the Main Tuning Coil of the YIG-Tuned Oscillator (YTO) to control its frequency. For narrow frequency spans (1 kHz/DIV to 2 MHz/DIV) the 1/N SWP signal is attenuated and applied to A14 Tuning Stabilizer Control Assembly, where it is summed with the voltage from the FINE TUNING control. The output signal then goes to the Tickler Coil Driver, which applies current to the YTO tickler coil for small frequency changes.

DC control lines from the FREQUENCY SPAN/DIV switch at the front panel control transistor switches in A15 Sweep Attenuator Assembly to select the different sweep attenuation settings. The chart (schematic Note 7) gives the control lines which are activated (+15V) and the total attenuation factor of this assembly for each FREQUENCY SPAN/DIV setting. When one of the control lines is not activated, the front panel switch provides an open circuit for that line. If the only circuit involved was in the assembly, these lines would go to −15V because of the pull-down resistors. However, the lines also control circuits in A7 Input/Output Assembly, which pull a slight amount of current through these pull-down resistors. Thus, the voltage on these control lines, when they are not activated, is −14V. The FULL line is pulled down to −39V when it is not activated.

The capacitors across the inputs of U1, U3, and U4 reduce the susceptibility of these op amps to external RF interference.

With the SWEEP TIME/DIV control set to AUTO, the sweep time is automatically controlled by the Auto Sweep Time (AST) circuitry. The sweep time is varied as a function of RESOLUTION BW, FREQUENCY SPAN/DIV, and VIDEO FILTER settings to maintain absolute amplitude calibration. As the FREQUENCY SPAN/DIV switch position is changed, the control lines turn on AST transistors which connect AST resistors to ground through diodes. This controls the current in the AST BW-FS line to which all the AST resistors in this assembly are connected. The resistors in turn control the sweep time of the sweep ramp generated in A16 Sweep Generator Assembly. As the FREQUENCY SPAN/DIV is narrowed, with RESOLUTION BW and VIDEO FILTER held constant, the resistance on the AST BW-FS line is lowered, causing the sweep rate to increase. However, the sweep rate is limited to a maximum of 20 MHz/ms and 2 ms/div for AUTO sweep time by the Current Limit circuit in A16 Sweep Generator Assembly.

÷1, ÷2, ÷4, Zero Sweep Attenuator Ⓐ

The 1/N SWP input comes from A16 Sweep Generator Assembly. It has a level of −5V to +5V for fundamental (N = 1) mixing mode operation. To maintain per-division frequency span calibration on harmonic mixing bands, this sweep input is reduced by the factor 1/N in A16 Sweep Generator Assembly (see schematic Note 6). This stage has a resistive voltage divider in which resistors are connected one at a time to ground by transistor switches. Op amp U5 is a non-inverting unity gain buffer.

When none of the control lines is activated, this stage has unity gain. When the FS ÷2 line is activated (+15V), Q22 and Q18 are turned on, connecting R5 to ground and producing a ÷2 voltage divider of R1 and R5. Q22 connects the ÷2 AST resistor R4 to ground through the base-emitter diode of Q18. When the ÷4 line is activated (+15V), Q23 and Q19 are turned on, connecting R9 to ground, and producing a ÷4 voltage divider of R1 and R9. Q23 connects the ÷4 AST resistor R8 to ground through the base-emitter diode of Q19. When ZERO SPAN mode is selected, the ZERO line is activated (+15V), turning on Q24 and Q20 to shunt the positive input of U5 to ground. Because of the saturation resistance of Q20 there is actually a voltage division of only a few thousand. This by itself is not sufficient attenuation of the sweep to put the analyzer in ZERO SPAN mode, so the ZERO line also activates, through CR14 and CR17 respectively, the ÷100 attenuator and switches the sweep to the TICK ATTEN SWP line. Q24 connects the Zero AST resistor R12 to ground through the base-emitter diode of Q20. A24 connects the Zero AST resistor R12 to ground through the base-emitter diode of Q20. A14 Tuning Stabilizer Control Assembly momentarily activates the ZERO line during the YTO frequency stabilization process.

Per Div Auto Sweep Time Switch (B)

The Per Div AST resistor R16 is connected to ground through Q27 and CR3 when the spectrum analyzer is neither in FULL BAND nor in PER DIV F mode. The FULL line is activated (+15V) for FULL BAND and PER DIV F modes. This turns on the inverter Q26, which turns off Q27. Thus R16 is disconnected, slowing down the auto sweep. The signal through CR2 turns off Q25, disconnecting the ÷1 AST resistor R36 when the FULL line is activated.

÷1, ÷10, X2.5 Sweep Attenuator (C)

This stage has op amp U2 connected as an inverting amplifier in which different sets of input and feedback resistors are selected by FET switches. Since the three sections (÷1, ÷10, and X2.5), which are switched in one at a time, are nearly identical, only the operation of the ÷10 section will be described. When the FS ÷10 line is not activated (open circuit at the front panel), Q12 has approximately −14V at the base and −14.5V at the emitter. This is enough reverse bias at the gate of Q9 to keep it turned off. R27 is a pull-down resistor which provides −15V for the FS ÷10 line.

When the FS ÷10 line is activated (+15V), Q12 is turned on with the base at approximately +0.6V and the emitter at 0V, connecting the gate of Q9 to ground. Now Q9 is no longer reverse biased by R25, but is turned on because the source and gate are at the same potential. (The source is at a virtual ground because of the operation of U2.) With Q9 on, the input resistor R22 and feedback resistor R23 are connected to the negative input of U2, giving an inverted attenuation of 10. When the FS ÷10 line is activated (+15V), Q21 is also turned on connecting the ÷10 AST resistor R38 to ground through CR10.

With Q9 on, CR5 has no effect; but when Q9 and this section are off, CR5 clamps the drain voltage of Q9 at −0.6V. This prevents Q9 from being turned on during part of a span because of the signal from the output of U2 being applied through R23. R24 reduces the current flowing through CR5 to prevent overloading of the current of U2. The ÷1 and X2.5 sections have higher value feedback resistors and do not have this current limiting resistor.

When the FS X2.5 line is activated (+15V), the X2.5 section is switched in, giving an inverted gain of 2.5 through the stage. There is no X2.5 AST resistor as this is the base frequency span from which all Per Div AST resistors are referenced. When neither the FS ÷10 nor the FS X2.5 line is activated, Q27 is turned off (CR7, CR8, and Q17 perform a NOR function) and the ÷1 section is switched in, giving an inverted unity gain. For ÷1, Q25 is turned on, connecting the ÷1 AST resistor R36 to ground through CR9.

÷1, ÷10 Sweep Attenuator (D)

This stage has op amp U1 connected as an inverting amplifier in which different sets of input and feedback resistors are selected by FET switches. These two sections (÷1 and ÷100) are nearly identical to the sections of the ÷1, ÷10, X2.5 Sweep Attenuator stage. (See the description of the ÷10 section.) When the FS ÷100 line is activated (+15V), the ÷100 section is switched in, giving an inverted attenuation of 100. The FS ÷100 line, when activated, also turns on Q14, connecting the ÷100 AST resistor R52 to ground through CR15. When the FS ÷100 line is not activated, the inverter Q6 is turned off and the ÷1 section is switched in, giving an inverted unity gain. MAIN SWP OFFSET adjustment R53 is adjusted to compensate for the op amp's offset voltage so that the signal remains centered on the CRT when the FREQUENCY SPAN/DIV control is switched from 5 MHz/DIV to 2 MHz/DIV (i.e., when the sweep is switched from MAIN ATTEN SWP to TICK ATTEN SWP).

Main and Tickler Coil Switches (E)

This stage is essentially an SPDT switch, routing the attenuated sweep ramp to either the Frequency Control Assembly or the Tuning Stabilizer Control Assembly. For wide FREQUENCY SPAN/DIV (5 MHz/DIV to 500 MHz/DIV) the NARROW line is not activated (open circuit at the front panel), and Q16 is turned on, shunting the sweep to ground at the positive input of U4. Q15 and Q7 are not turned off, so they do not shunt the sweep to ground at the positive input of U3. The attenuated sweep (MAIN ATTEN SWP) from this unity gain buffer

amplifier is applied to the Frequency Control Assembly, where it is summed with the voltage from the TUNING control. The output signal then goes to the YIG Driver Assembly, where the YTO Driver applies a current to the Main Coil of the YTO, tuning the YTO over its full range, in which the frequency is proportional to the current.

For narrow FREQUENCY SPAN/DIV (1 kHz/DIV to 2 MHz/DIV) and for ZERO SPAN mode, the NARROW line is activated (+15V), turning Q16 off so it does not shunt the sweep to ground at the non-inverting (+) input of op amp U4. The attenuated sweep (TICK ATTEN SWP) from this unity-gain buffer amplifier is applied to the Tuning Stabilizer Control Assembly where it is summed with the voltage from the FINE TUNING control. The output signal is then applied to the Tickler Coil Driver, which provides a current to the YTO Tickler Coil. This current tunes the YTO over a small frequency range in which the frequency is proportional to the current. The NARROW line, when activated, also turns on Q7 and Q15, shunting the sweep to ground at the non-inverting (+)input of op amp U3. One of the two transistors which shunt the sweep to ground (Q15) is operated in the inverted transistor mode to achieve sufficient attenuation and a low offset voltage. When the NARROW line is activated, Q5 is turned on, connecting the Narrow AST resistor R62 to ground through CR18.

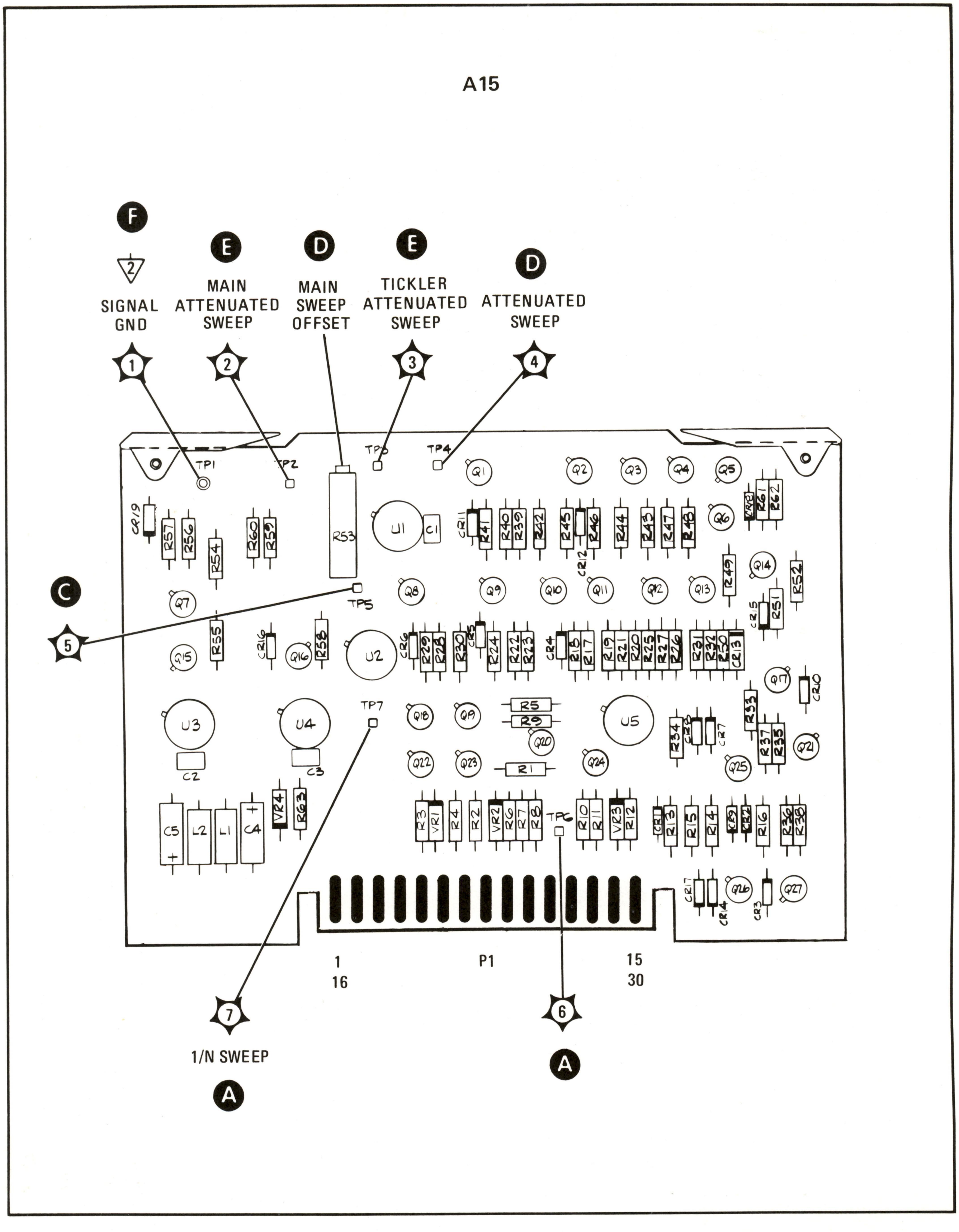

Figure 8-48. A15 Sweep Attenuator Assembly, Component Locations

A15 SWEEP ATTENUATOR ASSEMBLY
08565-60032

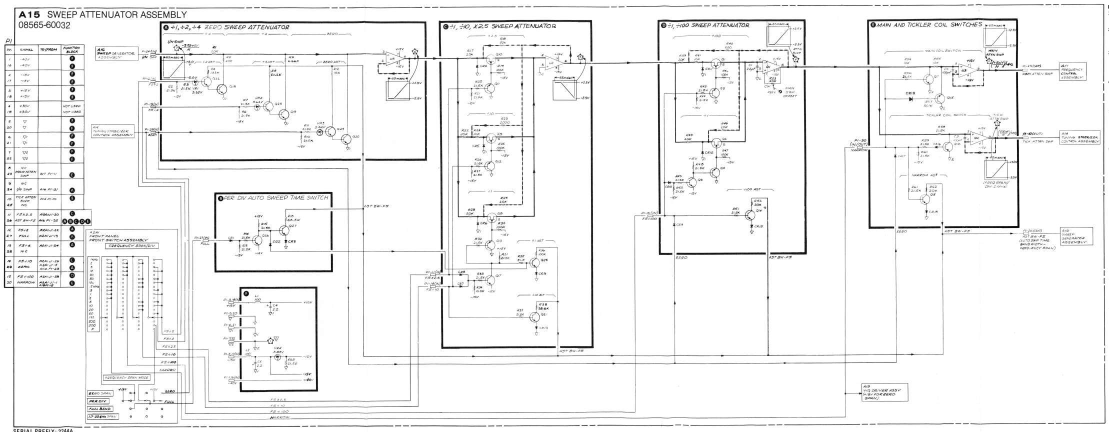

SERIAL PREFIX: 2244A

NOTES

1. REFERENCE DESIGNATORS WITHIN THIS ASSEMBLY ARE ABBREVIATED. FOR COMPLETE DESIGNATOR, PREFIX WITH ASSEMBLY REFERENCE DESIGNATOR.
2. UNLESS OTHERWISE INDICATED:
   RESISTANCE IN OHMS (Ω)
   CAPACITANCE IN MICROFARADS (μF)
   INDUCTANCE IN MICROHENRIES (μH)
3. TEST POINT WAVEFORMS ASSUME THE FOLLOWING SETTINGS:
   GREEN (NORMAL) SETTINGS
   FREQUENCY SPAN/DIV: 100 MHz
   FREQUENCY BAND: 1.7—4.1 GHz
   FREQUENCY: 3,000 GHz
4. TEST POINT SIGNAL VOLTAGE ARE REFERENCED TO SIGNAL GROUND ▽ 1 ON THIS ASSEMBLY. CONNECT THE LOW INPUT FROM A DVM TO TP1 FOR MOST ACCURATE DC MEASUREMENTS. FOR SOME TEST POINTS, SET ANALYZER TO SINGLE SWEEP FOR CONSTANT VOLTAGE INSTEAD OF RAMP.
5. TUNING SENSITIVITES ($\frac{mV}{N}$/MHz) ARE FOR THE YTO (1ST LO) NTH HARMONIC. THE TUNING SENSITIVITIES FOR THE YTO FUNDAMENTAL ALWAYS HAVE N=1. SEE NOTE 6 FOR HARMONIC NUMBER (N) VERSUS FREQUENCY BAND. SET ANALYZER TO SINGLE SWEEP TRIGGER TO MEASURE DC VOLTAGES AT TEST POINTS.
6. FREQUENCY BANDS

FREQUENCY BAND GHZ	BAND LINE	HARMONIC NUMBER
.01-1.8	B1	N=1
1.7 - 4.1	B2	N=1
3.8 - 8.5	B3	N=2
5.8 - 12.9	B4	N=3
8.5 - 18	B5	N=4
10.5 - 22	B6	N=5
12.4 - 26.5	B7	N=6
21 - 44	B8	N=10
33 - 71	B9	N=16
53 - 115	B10	N=26

7.

FREQUENCY SPAN/DIV	CONTROL LINES						ATTENUATION FACTOR	
	NARROW	FS÷100	FS÷10	FS÷4	FS÷2	FS×2.5	MAIN ATTEN SWP	TICK ATTEN SWP
1 kHz	H	H	H		H		OFF	÷2000
2 "	H	H	H				OFF	÷1000
5 "	H	H		H			OFF	÷400
10 "	H	H			H		OFF	÷200
20 "	H	H					OFF	÷100
50 "	H		H	H			OFF	÷40
100 "	H		H		H		OFF	÷20
.2 MHz	H		H				OFF	÷10
.5 "	H			H			OFF	÷4
1 "	H				H		OFF	÷2
2 "	H						OFF	÷1
5 "			H	H			÷40	OFF
10 "			H		H		÷20	OFF
20 "			H				÷10	OFF
50 "				H			÷4	OFF
100 "					H		÷2	OFF
200 "							÷1	OFF
500 "						H	×2.5	OFF
F							—	—

H = ACTIVATED (+15V)

8. THERE ARE GUARD RING TRACES ON THE PC BOARD WHICH ARE NOT SHOWN ON THE SCHEMATIC. THESE TRACES GUARD SENSITIVE CIRCUIT POINTS FROM LEAKAGE CURRENTS.

A15

Figure 8-49. A15 Sweep Attenuator Assembly, Schematic Diagram

A16 SWEEP GENERATOR ASSEMBLY, CIRCUIT DESCRIPTION

A16 Sweep Generator Assembly contains circuits which trigger and generate a −5V to +5V linear ramp that horizontally sweeps the CRT display. The sweep voltage is also processed in the Sweep Attenuator and Full Multiband Assemblies to sweep the analyzer frequency. The Sweep Generator circuit supplies the RETRACE BLANK signal to the Z Axis Assembly and drives the front panel SWEEP indicator LED.

Calibrated SWEEP TIME/DIV can be varied from 2 μSEC/DIV to 10 SEC/DIV in a 1, 2, 5 sequence. In AUTO mode, sweep time is selected to be the fastest possible for particular RESOLUTION BW, FREQUENCY SPAN/DIV, and VIDEO FILTER settings.

A current source in the Sweep Generator Assembly charges a timing capacitor to generate the linear ramp voltage which is applied to a buffer amplifier, providing the low impedance INT SWP output.

A sweep comparator controls the sweep start and stop voltages, and discharges the timing capacitor at the end of the sweep. Manual sweep circuitry in the sweep generator controls the dc output voltage of the INT SWP signal according to the position of the MANUAL SWEEP control on the front panel.

In frequency spans greater than 100 MHz/DIV in AUTO mode, a current-limiting circuit in the Sweep Generator Assembly prevents the analyzer from sweeping faster than approximately 20 MHz per millisecond. Logic circuitry in the Sweep Generator Assembly determines which of five different values of current limiting to apply to the Sweep Generator Current Source, depending on analyzer frequency span.

In VIDEO, EXT, and LINE settings of SWEEP TRIGGER, a trigger comparator in the Sweep Generator Assembly starts a sweep when the trigger signal exceeds the trigger level.

The External Sweep Input Buffer circuit converts the rear panel EXT SWEEP INPUT, a 0 to +10V ramp, to a −5V to +5V SWEEP voltage, which goes to the front-panel SWEEP SOURCE switch. The 1/N Sweep Attenuator sends the Sweep Attenuator Assembly a sweep signal of −5V to +5V, divided by the harmonic mixing number of the selected frequency band (see schematic Note 6).

Current Source Ⓐ

Current for the generation of the sweep is provided by a Current Source as shown in the simplified circuit in Figure 8-50. In the Temperature Dependent Power Supply, U2A provides a nominal +10V; diode Q4 is the temperature sensing element.

Because of the rise times for specific RESOLUTION BW and VIDEO FILTER settings, an error is caused in the displayed signal amplitude and frequency if the spectrum analyzer is swept too fast. In the AUTO mode, the sweep time is controlled by the RESOLUTION BW, FREQUENCY SPAN/DIV, VIDEO FILTER, and DGTL AVG settings. These settings determine the current at U2B pin 6, controlling the Current Source. Current to U2B is set by resistors on the AST BW-FS line that are connected by transistor switches to ground in various combinations, depending on RESOLUTION BW and FREQUENCY SPAN/DIV settings. Resistors connected to the AST-VF line control current to U2B that depends on the front-panel VIDEO FILTER setting. Resistors and transistor switches on the AST BW-FS and AST VF lines are located in the Video, Sweep Attenuator, and Full Multiband Assemblies. The resistors are sized so that AUTO sweep time is proportional to frequency span width and inversely proportional to the square of the resolution bandwidth (or video bandwidth, if video filtering is used).

In either calibrated or AUTO sweep time, the currents set at the inverting (−) input of U2B are summed to produce a voltage at the output of U2B (pin 7) proportional to the log of the sweep rate. Q11, the equal current driver, converts voltage variations into current variations proportional to the sweep rate. Q11B applies current through Q12 to timing capacitors C12 and C13 in the Sweep Generator circuit. Q11A applies a current (proportional to Q11B collector current) to the Auto Sweep Time Current Limit circuit.

Q9 provides temperature compensation for Q11. Q10 is a constant current regulator for Q9.

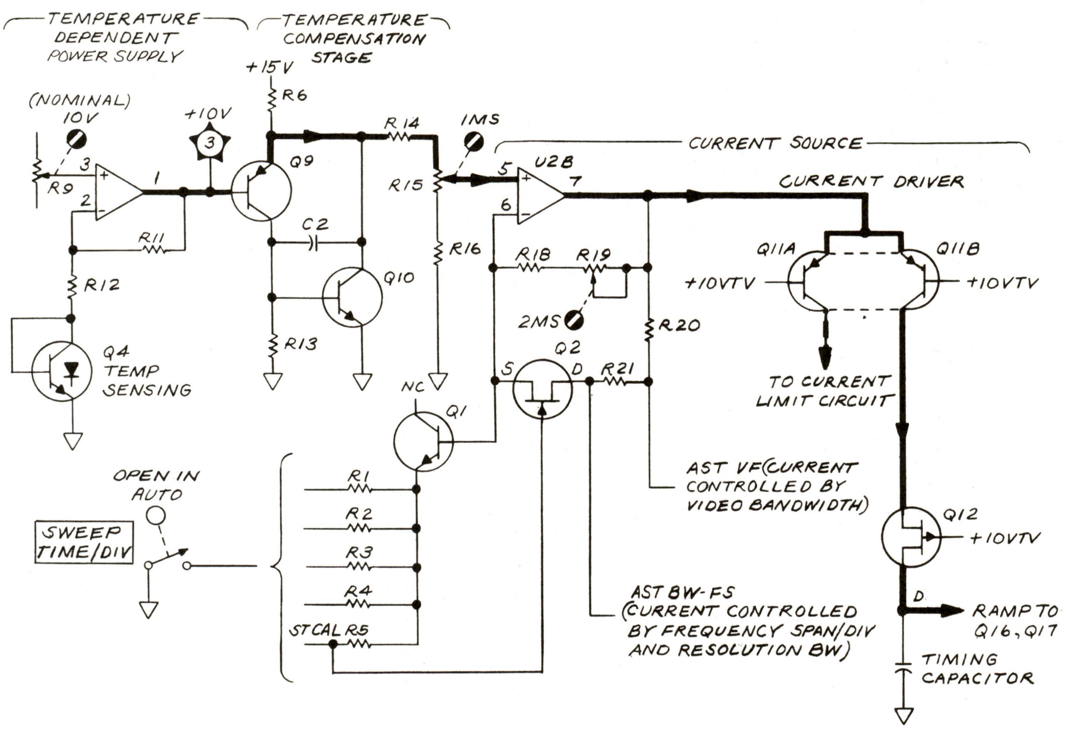

Figure 8-50. Simplified Circuit for Sweep Generator Current Source

In the calibrated SWEEP TIME/DIV mode, the gate of Q2 is grounded. This turns Q2 off and disconnects the currents dependent on RESOLUTION BW, FREQUENCY SPAN/DIV, and VIDEO FILTER. Calibrated sweep times are now controlled by the current to the inverting (−) input of U2B through resistors R1 through R5, which are grounded in various combinations by the front-panel SWEEP TIME/DIV switch. Q12 is normally kept on by R22 to the +10VTV supply and buffers Q11B from C12 and C13. In 1.7−22 GHz SPAN mode, the STOP SWP line from the Full Multiband Assembly pulls Q12 gate to +25V, turning Q12 off. This causes the sweep voltage to be held at a constant level as long as STOP SWP is high. STOP SWP signals occur at band crossings to prevent gaps from appearing on the display. The STOP SWP line is held high for approximately 15 ms at each band crossing.

Sweep Generator (D)

Referring to Figure 8-51, the operation for generating a ramp voltage in Auto Sweep is as follows. The ramp begins when the dead-time capacitor C15 charges to about +1.2V through R81. This turns Q13 on, and U3 pin 2 is driven negative. The output of sweep comparator op amp U3 rises to approximately +14V, Q13 is held on by CR5, and reset-diode CR3 is back-biased. With CR3 off, the constant current source begins charging timing capacitor C13 positive. The Q13 collector remains low throughout the sweep. As C13 charges, the voltage at inverting (−) input of U3 increases until it reaches +2.71V. At this time, the voltage at the output of U3 begins to decrease. When the output of U3 decreases to approximately +12V, VR1 and CR5 stop conducting, turning off Q13. As Q13 turns off, the voltage at inverting (−) input of U3 increases, causing output of U3 to go negative, discharging C13 through CR3. The change in U3 output of about −15V is coupled to the anode of CR7. With CR7 back-biased, Q13 remains off. U3 continues to discharge until the voltage at the inverting (−) input set by the voltage divider R59, R65, R66, and R131, reaches +2.71V. At this point (the beginning of the sweep dead time), the ramp is at −5V. The ramp remains at − 5V until the dead-time capacitor C15 charges through R81 to +1.2V, turning on Q13 and repeating the sweep cycle.

Other components in the Sweep Generator have the following functions. C7 is a speed-up capacitor for U3 switching. C9 is a speed-up capacitor for Q13 turn-off at the end of the sweep. CR6, R69, and R70 prevent C9 from affecting Q13 except at the end of the sweep. R131 adjusts the starting voltage of the ramp.

C8 and R62 desensitize U3 from spikes on the − 15V supply. C4, C5 and R64 provide frequency compensation for U1 and C6 feedback compensation. CR4 and R67 are used to bring U3 out of saturation at the end of the ramp to improve switching speed.

Single Sweep Control. Q13 is initially held off by R83 and CR10. Q14 is on (TPA at approximately + 9V), and voltage divider R72 and R73 charges C17 to + 2.8V. When the SWEEP TRIGGER switch is in SINGLE position, and the momentary START/RESET push button is pressed, + 15V is applied to R78, turning on Q8. This shorts the positive end of C17 to ground and produces a negative pulse at the emitter of Q13. This turns Q13 on, starting a sweep.

During the generation of a sweep, Q14 emitter is at − 0.6V, and the voltage divider R72 and R73 charges C17 to − 4V. The sweep may be aborted (reset to − 5V) by pressing the START/RESET push button. This turns on Q8. The negative end of C17 is shorted to ground, a positive pulse is generated at the emitter of Q13, and Q13 is turned off, aborting the sweep. The START/RESET push button will abort any sweep regardless of the SWEEP TRIGGER setting.

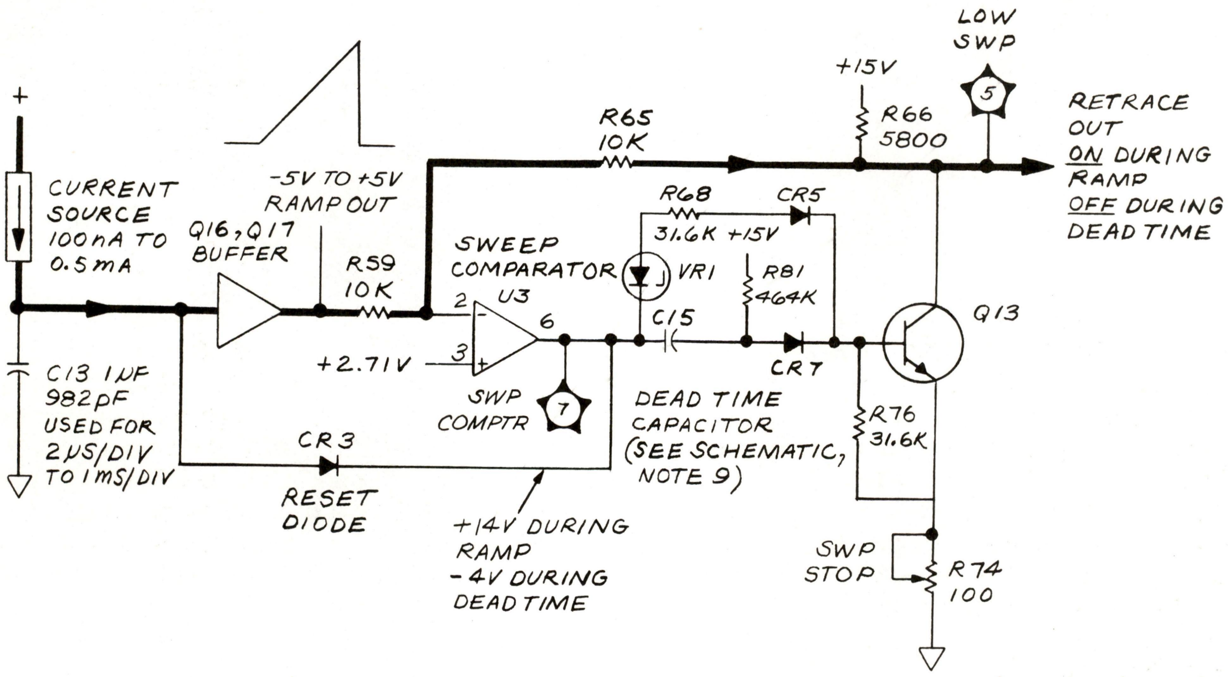

Figure 8-51. Simplified Sweep Generator in FREE RUN or AUTO

Fast/Slow Sweep Time Operation. Timing capacitors C12 and C13 are used to provide fast and slow sweep operation. When a fast sweep time (1 mSEC/DIV or faster) is selected by the SWEEP TIME/DIV switch, the ST FAST control line is grounded, turning off Q18 and Q15. With Q15 off, C12 and C13 are in series and C12 is the timing capacitor. With Q18 off, the + 15V at R88 will back bias CR11 and CR9, so C15 is switched out of the dead time circuit by CR8, R84, and Q21 for all frequency span modes except FULL BAND and 1.7 – 22 GHz SPAN. The short dead time (about 0.4 ms) is set by C10. For sweep times .1 mSEC/DIV (or in AUTO sweep times), the ST FAST control line is open, and Q18 and Q15 are both on. With Q15 on, a ground is provided for C13, and it becomes the timing capacitor. If the same amount of charging current is supplied to a larger capacitor, it will charge at a slower rate. CR11 and CR9 are on because of the conduction of Q18. C10 and C15 are in parallel, so the longer dead time (about 22 ms) is set by C15.

In FULL BAND or 1.7 – 22 GHz SPAN modes, Q21 is turned on by CR25 (FULL BAND) or CR26 (1.7 – 22 GHz SPAN). This forward biases CR8, placing C11 in parallel with C10 and C15. This sets the dead time at about 80 ms.

FREE RUN Operation. In FREE RUN mode, +15V is applied through the SWEEP TRIGGER switch to the voltage divider R82 and R83. The voltage at the cathode of CR10 is approximately +1.5V and CR10 does not conduct. The Sweep Generator circuit free runs and Q13 turns on following the previous sweep and after the dead time, which is determined by the RC time constants.

Manual Sweep Control (C)

Manual control of the sweep is obtained with the SWEEP SOURCE switch in MNL (see Figure 8-52). In INT, Q19 and Q20 are turned off because Q20 base is pulled to ground through R97 and Q19 is held off by R99. In MNL Mode, Q19 and Q20 are turned on through R100. Q19 turns Q13 on and keeps it on. U3 holds CR3 on, and the feedback loop to the timing capacitor is closed. Turning the MANUAL SWEEP control changes the input current through Q20 to inverting (−) input of U3. Since the output current through R65 is constant, any change in MANUAL SWEEP current must be compensated for by a change in the current through R59 and R131, thereby varying the ramp output voltage.

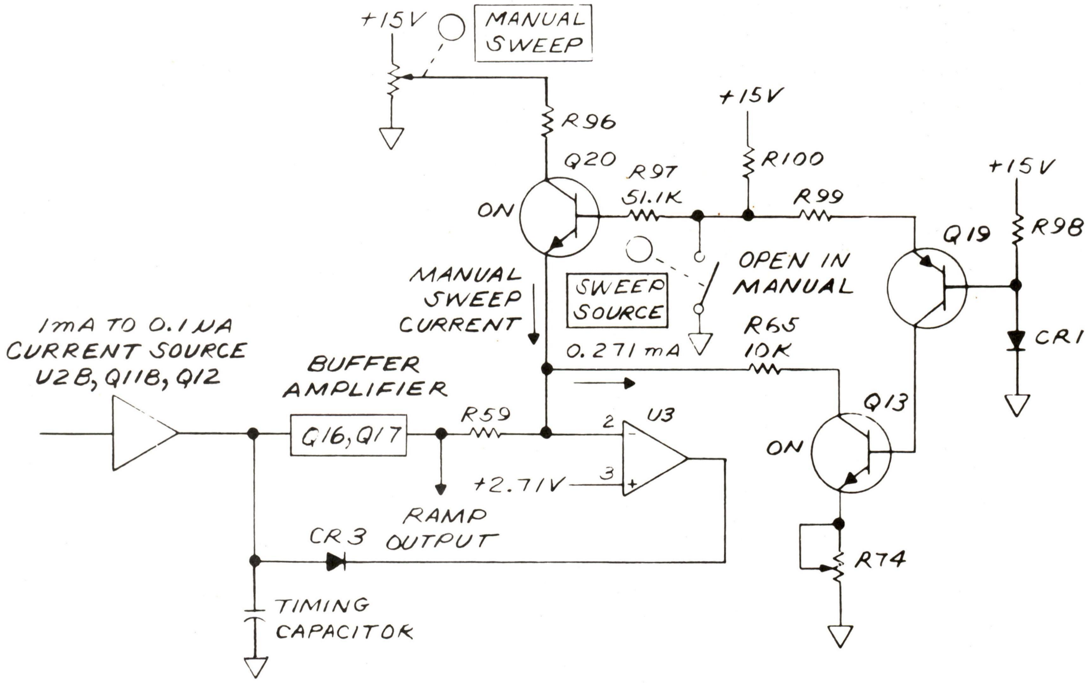

Figure 8-52. Manual Sweep, Simplified Schematic Diagram

Sweep Trigger (E)

The Sweep Trigger circuit generates the signal that is applied to the Sweep Generator to start a sweep in VIDEO, EXT, or LINE trigger modes. The front-panel SWEEP TRIGGER switch selects between the video signal (VIDEO), the external trigger signal from the rear panel (EXT), and an ac voltage at the line frequency (LINE). The ac line voltage is attenuated to a 0V to 3V peak-to-peak signal, and the external trigger is attenuated and filtered on the RF-IF Motherboard before being routed to the front-panel SWEEP TRIGGER switch. The selected trigger signal is applied to the inverting input of comparator U4. A 0V to 0.8V reference voltage proportional to the front panel TRIGGER LEVEL setting is applied to the non-inverting input of U4 from voltage divider R121 and R122. When the SWEEP TRIGGER switch is in LINE, VIDEO, or EXT position, Q13 is held off by R83 and CR10. A sweep can then be generated only when a negative pulse is applied to the emitter of Q13 in the Sweep Generator. The negative pulse is generated by a Pulse Shaper circuit when the output of trigger comparator U4 goes low. The Pulse Shaper consists of a differentiator (C20 and R126) and an emitter follower (Q6).

During a sweep, RETRACE BLANK is approximately −0.6V, and Q3 and output pull-up resistor R124 disable U4 to prevent trigger pulses from going to the Sweep Generator. When RETRACE BLANK is high, and when trigger signal rises above the trigger level voltage, the output of U4 switches from approximately +5V to 0V, turning on Q6 through C20. A negative-going pulse is coupled through R75 to turn on Q13 in the Sweep Generator, starting a sweep.

After the ramp is completed, the circuit returns to a dead-time state, and another trigger is required to generate another sweep. Triggers (negative transitions at output of U4) may occur during the dead time, but these will not start a sweep until the end of the dead time, when the dead time capacitors are charged sufficiently to place the anode of CR7 at approximately −2V or higher.

Auto Sweep Time Current Limit (B)

Tracking between the YTO and YTF is degraded if the analyzer frequency is swept too fast. To limit the frequency sweep rate to approximately 20 MHz per msec and a maximum rate of 7 msec per division, CMOS logic gates U5 through U8 in the Auto Sweep Time Current circuit select which of five different current limit values to apply to the Current Source. Since sweep rate is proportional to current, limiting the current prevents the sweep rate from exceeding a certain upper limit. Control lines from the front-panel FREQUENCY SPAN/ DIV, FREQUENCY SPAN MODE, FREQUENCY BAND GHz, and DGTL AVG switches drive the current limit logic. Refer to the simplified schematic, Figure 8-53.

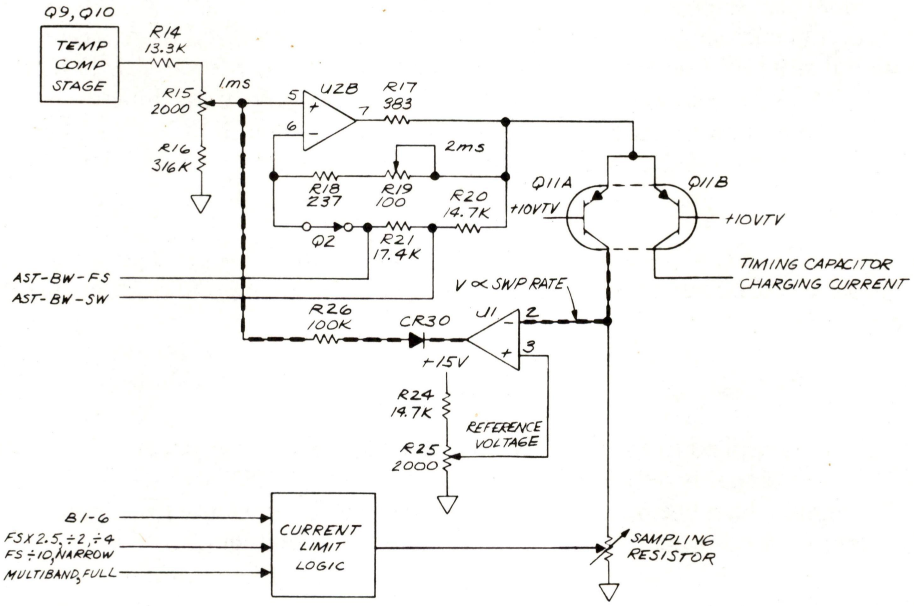

Figure 8-53. Auto Sweep Time Current Limit, Simplified Schematic Diagram

Q11B supplies current to charge timing capacitors C12 and C13 in the Sweep Generator. Q11A supplies a current (proportional to timing capacitor current) to sampling resistors R33 and R27 through R31 in the Auto Sweep Time Current Limit circuit. The voltage developed across the sampling resistors is proportional to sweep rate and is compared to a reference voltage by op amp U1. When the input voltage at inverting (−) input of U1 is less than the reference voltage at non-inverting (+) input, the current source is not current limited. The output of U1 is approximately +14 volts, CR30 is reverse biased, and the current source is not affected. If the Current Source level becomes high enough to cause the voltage across the sampling resistors – that is, the voltage at the inverting (−) input of U1 – to equal the voltage at the non-inverting input of U1, the current limit is activated. The output of U1 is approximately +10V or less, and CR30 is forward biased, closing the feedback loop around Q11A, U1, CR30, U2B, and associated circuitry. When this feedback loop is closed, the voltage at the positive input of op amp U2B is pulled down by current through R26. This reduces the voltage developed by U2B at the emitters of Q11A, and Q11B, reducing the current supplied by Q11A to sampling resistors R27

through R33, and the current supplied by Q11B to the timing capacitors in the Sweep Generator. The collector currents are held at a level at which the sampling resistor voltage equals the reference voltage. AST LIMIT R25 sets the reference voltage. R25 is adjusted to compensate for the mismatch in collector currents for equal base-emitter voltages in Q11A and Q11B.

The reference voltage is nominally +1V but to compensate for mismatch in Q11, it can be adjusted from +0.6V to +1.4V.

Because of the similar operation of each of the current limits, only one case will be described. Assume the analyzer is in PER DIV, .2 MHz/DIV, RESOLUTION BW of 3 kHz, VIDEO FILTER OFF, NARROW and FS −10 control lines are approximately +15V. CR27 and CR28 are forward biased. (Refer to Figure 8-55.) R54 and R55 form a voltage divider, causing the input to U8D pin 9 to be approximately +5V, a logic high. The output of U8F is also a logic high. If the SWP TIME LIMIT control line is high or low, either U7D or U7A, respectively, is enabled. If U7A is enabled, its output becomes approximately +5V, and Q30 is turned on, placing R31 in parallel with R33. The output of U7C is low, FULL is low, and ST CAL is high, so Q5, Q7, and Q28 through Q29 are off. As shown in the table, Note 8, on the schematic, when the sampling resistance is R31 in parallel with R33, the sweep rate cannot be faster than about 7 mSEC/DIV in AUTO. When the above bandwidth and frequency span settings are active, the auto sweep time is approximately 450 ms (45 ms/DIV). Suppose the bandwidth is now increased to 30 kHz. This increase in bandwidth by a factor of 10 would cause the current source to increase by a factor of 100 (if the current limit were not present), resulting in a sweep rate of 4.5 ms/DIV. However, the Current Source only increases to the level that causes the voltage across the sampling resistors to equal the reference voltage at inverting (−) input of U1. At this point CR30 becomes forward biased and prevents current from increasing beyond the level required to generate a 7 ms per division sweep. For certain digital storage functions, such as digital averaging, the SWP TIME LIMIT control line is pulled high, causing U7D to be enabled and a 11 ms/DIV auto sweep time limit to be selected. In other frequency span widths, different sweep rate limits are set when the current limit logic selects different values of sampling resistance. See the table on the schematic (Note 8) for the current limits for various frequency span settings.

In calibrated sweep times, ST CAL is grounded, pulling U8A pin 1 low. U8A pin 2 goes high and turns on Q28, placing R27 in the sampling resistance. This sampling resistance is low enough to prevent current limiting in any of the calibrated sweep times.

External Sweep Input Buffer (F)

When a 0V to +10V signal is applied to the EXT SWEEP INPUT on the rear panel, it is attenuated by resistive divider R127 and R128. The signal is amplified and offset by U9A, R129, and R130. The output of op amp U9A is a −5V to +5V signal which becomes the analyzer sweep signal when the front panel SWEEP SOURCE switch is in the EXT position. VR3 protects U9A from excessive input voltages.

1/N Sweep Attenuator (G)

To maintain per division frequency span calibration in harmonic mixing modes, the sweep voltage supplied to the Sweep Attenuator Assembly is the −5V to +5V SWEEP divided by N. (N is the harmonic number.) In the .01 to 1.8 GHz frequency band, N=1. Band control line B1 is +15V, and B2 through B8 are pulled to approximately −15V through pull-down resistors in the Sweep Generator Assembly and the Frequency Control Assembly. Q31, Q34, and Q22 through Q27 of the 1/N Sweep Attenuator are turned off, and the sweep signal applied through R101 is not attenuated. The sweep is buffered by unity gain follower U9B.

Operation is the same in the 1.7 to 4.1 GHz frequency band (N=1). In the 3.8 to 8.5 GHz frequency band (N=2), B3 is at +15V, turning on Q22. This causes R101 and R104 to form a 2 to 1 voltage divider, and 1/N SWP from U9B is now −2.5V to +2.5V. Except for B10, the operation of the 1/N Sweep Attenuator is similar for the remaining bands. Control Line B10 is activated as the default condition when B1 through B9 are pulled up to −15V, in which case Q33 and Q31 are turned on, causing R101 and R94 to form the appropriate voltage divider. Refer to the table on the schematic (Note 6) for the band line and harmonic number for each frequency band.

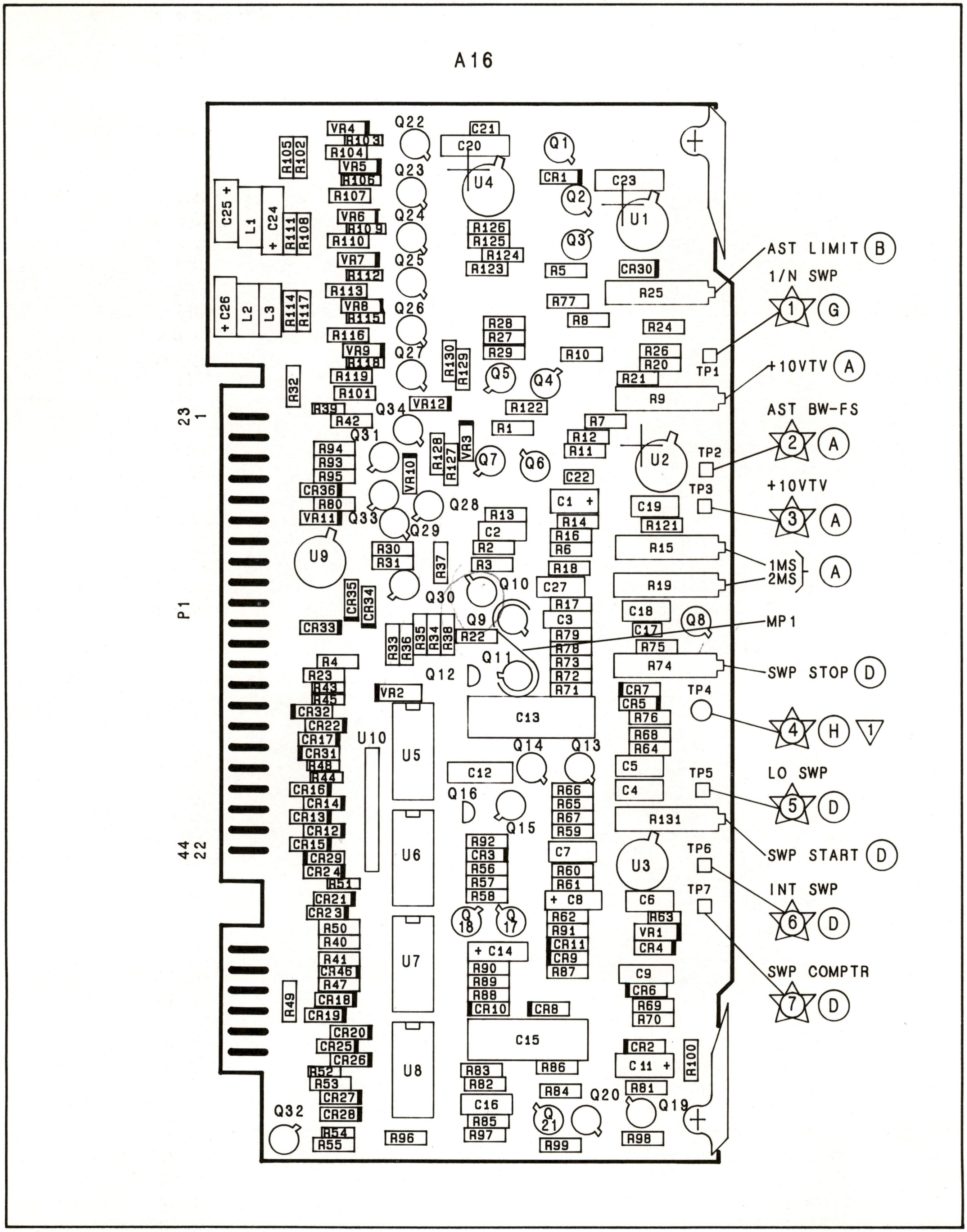

Figure 8-54. A16 Sweep Generator Assembly, Component Locations

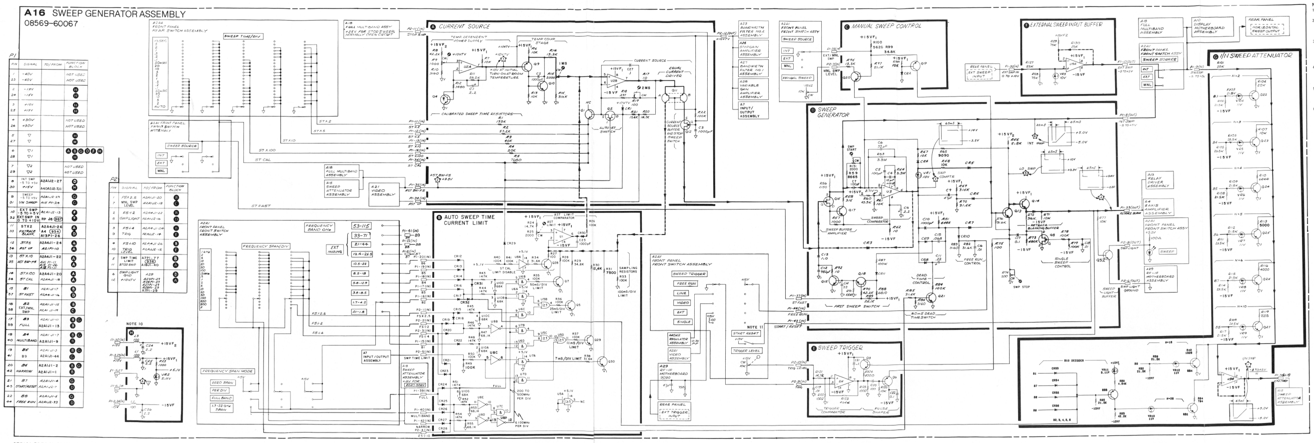

SERIAL PREFIX: 2244A

NOTES

1. REFERENCE DESIGNATORS WITHIN THIS ASSEMBLY ARE ABBREVIATED. FOR COMPLETE DESIGNATOR, PREFIX WITH ASSEMBLY REFERENCE DESIGNATOR.
2. UNLESS OTHERWISE INDICATED:
   RESISTANCE IN OHMS (Ω).
   CAPACITANCE IN MICROFARADS (μF).
   INDUCTANCE IN MICROHENRIES (μH).
3. TEST POINT WAVEFORMS ASSUME THE FOLLOWING SETTINGS:
   GREEN (NORMAL) SETTINGS
   FREQUENCY SPAN/DIV.: 100 MHz
   FREQUENCY BAND: 1.7 - 4.1 GHz
   FREQUENCY: 3.000 GHz
4. TEST POINT SIGNAL VOLTAGES ARE REFERENCED TO SIGNAL GROUND ▽ ON THIS ASSEMBLY. CONNECT THE LOW INPUT OF A DVM TO TP4 FOR MOST ACCURATE DC MEASUREMENTS. SET ANALYZER TO SINGLE SWEEP TRIGGER OR MNL SWEEP SOURCE TO MEASURE DC VOLTAGES AT TP1 & TP6.
5. MNEMONICS:
   AST = AUTO SWEEP TIME
   BW - FS = BANDWIDTH - FREQUENCY SPAN
   CAL = CALIBRATED
   ST = SWEEP TIME
   TV = TEMPERATURE VARIABLE
   VF = VIDEO FILTER
6. FREQUENCY BANDS

FREQUENCY BAND GHz	BAND LINE	HARMONIC NUMBER
.01-1.8	B1	N=1
1.7-4.1	B2	N=1
3.8-8.5	B3	N=2
5.8-12.9	B4	N=3
8.5-18	B5	N=4
10.5-22	B6	N=5
12.4-26.5	B7	N=6
21-44	B8	N=10
33-71	B9	N=16
33-115	B10	N=26

Q11 TOP VIEW

Q12 AND Q16 TOP VIEW

7. THERE ARE GUARD RING TRACES ON THE PC BOARD WHICH ARE NOT SHOWN ON THE SCHEMATIC. THESE TRACES GUARD SENSITIVE CIRCUIT POINTS FROM LEAKAGE CURRENTS.
8. AUTO SWEEP TIME CURRENT LIMIT.

SWEEP TIME NOT LESS THAN	FREQUENCY SPAN MODE	FREQUENCY SPAN/DIV	SWEEP TIME/DIV	SAMPLING RESISTOR GROUNDED
100mS/DIV	1.7-22GHz SPAN		AUTO	B R33
	FULL BAND — BAND 7, 8, 9, OR 10		AUTO	
50mS/DIV	FULL BAND — BAND 4, 5 OR 6		AUTO	B R33 R28
25mS/DIV	FULL BAND — BAND 2 OR 3		AUTO	B R33
	PER DIV	500 MHz	AUTO	B R29
11 mS/DIV	FULL BAND — BAND 1		AUTO	B R33
	PER DIV	200 MHz	AUTO	B R30
7mS/DIV	PER DIV	≤100MHz	AUTO	B R33 R31
CURRENT LIMIT DISABLED			CALIBRATED SWEEP TIMES	B R33 R27

AUTO TIME NOT LESS THAN 11mS/DIV IN DGTL AVG MODE.

9. SWEEP DEAD TIME (NOMINAL).

DEAD TIME	SWEEP TIME/DIV	FREQUENCY SPAN MODE	SWEEP GENERATOR BOARD COMPONENTS
.33mS	≤ 1mS	ZERO SPAN	D C10
22mS	≥ 2mS OR AUTO	ZERO SPAN OR PER DIV	D CR10 C13
80mS		FULL OR 1.7-22 GHz SPAN	D Q21, R48 CR8, CR11

10. +5V LINES ARE SEPARATED SO THAT P1-30 SOURCE WILL BE FREE OF LOADING EFFECTS.
11. ACTION OF START/RESET SWITCH IS MOMENTARY.

A16

Figure 8-55. A16 Sweep Generator Assembly, Schematic Diagram

A17 FREQUENCY CONTROL ASSEMBLY, CIRCUIT DESCRIPTION

A17 Frequency Control Assembly contains circuits for controlling and displaying the frequency to which the analyzer is tuned. There are three main outputs from this assembly: a signal proportional to the YTO frequency, a signal proportional to the YTF frequency, and a signal proportional to the center (or marker) frequency. It also includes three precise, low-noise, reference power supplies. The TUNE voltage and the offset voltages are derived from these. The outputs of the power supplies are also used in other assemblies in the analyzer.

MAIN ATTEN SWP from A15 Sweep Attenuator Assembly is summed with the voltage from the coarse TUNING control in this assembly. The YTO FREQ ANALOG (proportional to the YTO frequency) which goes to the YIG Driver Assembly to control the YTO frequency is selected by the FREQUENCY SPAN MODE switch from one of three sources, depending on whether the analyzer is in PER DIV, FULL BAND, or 1.7 – 22 GHz SPAN mode. This signal is also applied to the YTF N/5 Attenuator circuit, which attenuates and offsets it according to the FREQUENCY BAND GHz setting. The output of this circuit is the YTF FREQ ANALOG signal (proportional to the YTF frequency) which goes to the YIG Driver Assembly to control the frequency of the YTF. The Center Frequency N/5 Attenuator circuit attenuates and offsets the voltage from the TUNING controls to provide an output proportional to the center (or marker) frequency of the analyzer.

The capacitors across the inputs of U2 through U7 reduce the susceptibility of these op amps to external RF interference.

+ 10V Reference (B)

This circuit is a precise, stable, low-noise + 10.000V reference power supply. Its output, the + 10V REF voltage, is the input to the + 22.3V Reference and – 10V Reference supplies. The + 10V REF and + 22.3V REF voltages go to the coarse TUNING control from which the TUNE voltage is obtained. The + 10V REF and – 10V REF voltages are also used in the YTF N/5 Attenuator and Center Frequency N/5 Attenuator to produce offsets; and in other assemblies where an accurate, low-noise voltage is required.

VR1 is a temperature-compensated 6.2V zener diode whose current is supplied via R7. R6 and C1 filter noise generated by VR1. The regulated voltage from VR1 is applied to the positive input of U5. Resistors R9 through R13 form a resistive voltage divider. The op amp output is driven to a level such that the output from the voltage divider, which is applied to the negative input, is equal to the voltage at the positive input. The output is set at + 10.000V by means of factory-selected resistor R9 and the + 10VR pot R11. R8 supplies additional output current for the stage.

+ 22.3V Reference (A)

This circuit is a precise, low-noise + 22.3V reference power supply. Its output, the + 22.3V REF voltage, is used along with the + 10V REF voltage for generating the TUNE voltage. Op amp U4 is connected as a non-inverting amplifier with a gain (2.230) that is determined solely by R1 and R2 (unless the analyzer is in FREQUENCY BAND GHz .01 – 1.8). The input is + 10.000V, so the output is + 22.30V. When FREQUENCY BAND GHz is set to .01 – 1.8, the B1 line is activated (+ 15V), which biases FET Q1 on. This shunts R5 across R1, which lowers the gain of the stage to 1.935; thus, the output voltage is + 19.35V.

– 10V Reference (C)

This circuit is a precise, low-noise – 10.00V reference power supply. Its output, the – 10V REF voltage, is used in the YTF N/5 Attenuator and Center Frequency N/5 Attenuator to produce offsets. This voltage is also used in other assemblies where a precise, low-noise voltage is required. Op amp U7 is connected as an inverting unity gain amplifier. The input is + 10.000V, so the output is – 10.000V.

TUNE Buffer (D)

The +22.3V REF and +10V REF voltages go to the coarse TUNING and FINE TUNING controls at the front panel. The coarse TUNING control sets the center frequency in PER DIV mode and sets the marker frequency in the FULL BAND, PER DIV, and 1.7 – 22 GHz SPAN modes. Op amp U5 is connected as a non-inverting, unity gain buffer. The output, from +10V to +22.3V (+10V to 19.35V for FREQUENCY BAND GHz .01 – 1.8), depends on the setting of the coarse TUNING control. The output from U6, the BUFF TUNE signal, goes to the Sweep + Tune Summer, where it is summed with the MAIN ATTEN SWP signal from the Sweep Attenuator Assembly. It also goes to the Center Frequency Inverter, where it eventually determines the FREQUENCY GHz readout at the front panel. The BUFF TUNE signal also goes to the Full Multiband Assembly, where it is used in the Full Marker Circuit.

Sweep + Tune Summer (F)

This stage sums the BUFF TUNE signal from the TUNE Buffer (which is proportional to center frequency in PER DIV mode) with the MAIN ATTEN SWP signal from the Sweep Attenuator Assembly (which is proportional to frequency span). Op amp U3 is connected as an inverting amplifier with unity gain for both input signals. In PER DIV mode, the output PER DIV SWEEP + TUNE signal is connected to the YTO FREQ ANALOG line, which goes to the YIG Driver Assembly where it controls the frequency of the YTO.

Span Mode Switch (G)

This stage switches three input signals. The output is the YTO FREQ ANALOG signal which is proportional to the YTO frequency.

The output of the Span Mode Switch is selected from the three input signals PER DIV SWEEP + TUNE, FULL FREQ ANALOG, and MULTIBAND FREQ ANALOG by turning on one of the three FET switches Q2, Q4, or Q6. With the analyzer in PER DIV mode, the FULL and MULTIBAND lines are not activated (open circuit at front panel), and Q22 is turned off, which turns off Q3. The Per Div FET Q2 is then turned on by the gate-source resistor R24. The PER DIV SWEEP + TUNE signal is thus applied to the input of U2.

With the analyzer in FULL BAND or PER DIV F, the FULL line is activated (+15V). This turns Q22 on, turning Q3 on. The –35V applied through Q3 biases Per Div FET Q2 off. The FULL line also turns off Q5. Full FET Q4 is then turned on by the gate-source resistor R28. Thus, the FULL FREQ ANALOG signal from the Full Multiband Assembly is applied to the input of U2.

With the analyzer in 1.7 – 22 GHz SPAN mode, the MULTIBAND line is activated (+15V). This turns Q22 off, turning Q3 on. The –35V applied through Q3 biases Per Div FET Q2 off. The MULTIBAND line also turns off Q7. Multiband FET Q6 is then turned on by the gate-source resistor R31. Thus, the MULTIBAND FREQ ANALOG signal from the Full Multiband Assembly is applied to the input of U2.

Op amp U2 is connected as a non-inverting, unity gain buffer. The output of U2 is the YTO FREQ ANALOG signal, which is a precise voltage proportional to the frequency of the YTO. The sensitivity at this point is –5 mV per MHz for fundamental frequency of the YTO. This sensitivity is divided by the harmonic number N for the harmonic mixing frequency bands (see schematic Notes 6 and 7).

The YTO FREQ ANALOG signal goes to the following assemblies:

- YIG Driver Assembly, where it controls the frequency of the YTO by controlling the current in the Main Coil of the YTO;
- Bias Assembly, where it controls (as a function of frequency) the FLATNESS signal to the Variable Gain Amplifier Assembly, which controls the IF gain to compensate for losses in the RF circuitry;
- Full Multiband Assembly, where it is used in the Oversweep Blanking Circuit.

The YTO FREQ ANALOG also is applied to the YTF N/5 Attenuator circuit, the output of which is the YTF FREQ ANALOG signal (proportional to the frequency of the YTF).

YTF N/5 Attenuator (H)

The YTF FREQ ANALOG signal from the FREQUENCY SPAN MODE switch goes to this stage, where it is attenuated and offset an amount selected by the band lines B1 through B6 and BEM, from the FREQUENCY BAND GHz switch. The output of this stage is the YTF FREQ ANALOG signal (proportional to the YTF frequency) that goes to the YIG Driver Assembly, where it controls the frequency to which the YTF is tuned.

The YTF N/5 Attenuator circuit has op amp U8 connected as an inverting amplifier in which different sets of input and feedback resistors are selected by FET switches. There are five nearly identical sections, which are switched in one at a time. They provide inverted gains of N/5 where N = 1 to 5. The operation of the N = 2 – section will be described. When the B3 line is not activated (open circuit at the front panel), Q11 has approximately – 15V at both the base and the emitter; this is enough reverse bias at the gate of Q10 to keep it turned off. Pull-down resistor R87 in the Center Frequency N/5 Attenuator circuit provides – 15V for the B3 line.

When the B3 line is activated (+ 15V), Q11 is turned on with the base at approximately + 0.6V and the emitter at 0V, connecting the gate of Q10 to ground. Now Q10 is no longer reverse biased by R45 but is turned on because the source and gate are at the same potential. (The source is at a virtual ground because of the operation of U8.) With Q10 on, the input resistors R41 through R43 and the feedback resistor R44 are connected to the negative input of U8, giving an inverted gain of 0.4 (2/5) to the YTO FREQ ANALOG signal. R41 provides an offset to account for the 321.4 MHz IF offset frequency between the YTF frequency and the YTO frequency (or the harmonic frequency of the YTO for harmonic mixing bands). The polarity of this offset is reversed for the N = 4 + and N = 5 + sections (see schematic Note 7). YTF OFFSET N2 potentiometer R43 provides a slight adjustment in offset to compensate for hysteresis effects in the YTF.

With Q10 on, CR7 has no effect; but when Q10 and this section are off, CR7 clamps the drain voltage of Q10 at – 0.6V. This prevents Q10 from being turned on by the output of U8 via R44. This diode is not necessary for the N = 1 – section.

When the B1, B2 or BEM (Band EXT MIXER) line is activated (+ 15V), the N = 1 – section is switched in, giving an inverted gain of 0.2 (1/5) to the YTO FREQ ANALOG signal. The B4, B5, and B6 lines respectively switch in the N = 3 –, N = 4 –, and N = 5 + sections for inverted gains of 0.6, 0.8, and 1.

The YTF CORRECT signal from the Tuning Stabilizer Control Assembly is summed at the input of U8 through R68. This signal is proportional to the frequency change in the YTO caused by the Tickler Coil. The frequency change caused by this signal can be a maximum of ± 10.5 MHz.

The output of U8 is the YTF FREQ ANALOG signal, which is a precise voltage proportional to the frequency of the YTF. YTF offset adjustments, N2 through N5, shift the YTF frequency slightly for the different frequency bands. The tuning sensitivity at this point is + 1 mV per MHz of frequency at the YTF. The YTF FREQ ANALOG signal goes to the YIG Driver Assembly, where it determines the frequency to which the YTF is tuned by controlling the current in the Coil of the YTF, and to the Full Multiband Assembly, where it is used in the Multiband Marker circuit.

Center Frequency Inverter (E)

The BUFF TUNE signal from the TUNE buffer is inverted to apply the correct polarity to the Center Frequency N/5 Attenuator. Op amp U1 is connected as an inverting amplifier with unity gain for this signal. The CENTER FREQ CORRECT signal is summed in at this stage. This signal, which comes from the Tuning Stabilizer Control Assembly, is the summation of three signals: those from the FREQ CAL and FINE TUNING controls at the front panel, and the ERROR signal in the stabilized mode. R20 supplies additional output current for the stage. The output of the Center Frequency Inverter goes to the Center Frequency N/5 Attenuator.

Center Frequency N/5 Attenuator ❶

The output from the Center Frequency Inverter goes to the Center Frequency N/5 Attenuator, where it is attenuated and offset an amount selected by the band lines B1 through B10, from the FREQUENCY BAND GHz switch, and the MULTIBAND line. The output of this stage is the CENTER FREQUENCY signal (proportional to the center frequency to which the analyzer is tuned) that goes to the DVM Analog Assembly, which in conjunction with the DVM Digital Assembly provides the FREQUENCY GHz readout.

The Center Frequency N/5 Attenuator has op amp U9 connected as an inverting amplifier, in which different sets of input and feedback resistors are selected by FET switches. There are ten nearly identical sections, which are switched in one at a time. Six of the sections provide inverted gains of N/5 where N = 1 to 5. Three sections provide inverted gains of N/50 where N = 6, 10 and 26. There is not a separate section for band 9. Instead, the correct attenuation is achieved by turning on both the N = 6 and N = 26 sections. This gives an inverted gain of N/50 where N = 16. Offsets equivalent to ±321.4 MHz or ±2050 MHz are summed in depending on the FREQUENCY BAND GHz setting (see schematic Note 7). There is also a Multiband section, which is switched in to read out the marker frequency in the 1.7 – 22 GHz SPAN mode. The operation of the N = 2 – section will be described.

When the B3 line is not activated (open circuit at the front panel), Q19 has approximately – 15V at both the base and the emitter; this is enough reverse bias at the gate of Q18 to keep it turned off. R87 is a pull-down resistor which provides – 15V for the B3 line.

When the B3 line is activated (+ 15V), Q19 is turned on with the base at approximately + 0.6V and the emitter at 0V, connecting the gate of Q18 to ground. Now Q18 is no longer reverse biased by R85 but is turned on because the source and gate are at the same potential. (The source is at a virtual ground because of the operation of U9.) With Q18 on, the input resistors R82 and R83 and the feedback resistor R84 are connected to the inverting (–) input of U9, giving an inverted gain of 0.4 (2/5) to the signal from the Center Frequency Inverter. R83 provides an offset to account for the 321.4 MHz IF offset frequency between the center frequency and the YTO frequency (or the harmonic frequency of the YTO for the harmonic mixing bands). The polarity of this offset is reversed for bands B5 through B10 and is equivalent to 2050 MHz for B2 (see schematic Note 7).

With Q18 on, CR13 has no effect; but when Q18 and this section are off, CR13 clamps the drain voltage of Q18 at – 0.6V. This prevents Q18 from being turned on by the output of U9 via R84. (This diode is not necessary for some sections.)

When the MULTIBAND line is active, Q36 is on, with – 15V at its collector. CR14 is forward biased, turning off Q19 and Q18. The B3 line is activated during part of the multiband span; this keeps the N = 2 – section from being turned on when only the Multiband section should be on.

The B1, B2, B4, B5, B6, B7, B8, B9, and B10 lines respectively switch in the N = 1 – (2050), N = 1 –, N = 3 –, N = 4 +, N = 5 +, N = 6 +, N = 10 +, N = 16 + (N = 6 + and N = 26 + at the same time), and N = 26 + sections for inverted gains of 0.2, 0.2, 0.6, 0.8, 1, 0.12, 0.2, 0.32, and 0.52. When the Multiband line is activated (+ 15V), Q36 is turned on to keep all the other sections off. The Multiband section provides a gain and offset such that the output of U9 goes over a range of slightly more than + 1.7V to + 22V for the full range of the coarse TUNING control.

CF OFF potentiometer R125 is adjusted to zero the offset voltage of U9, eliminating the error that would otherwise be introduced when switching sections. Q35 increases output current capability of the stage. The current through R126 approaches 3 mA at U9 positive supply terminal. As the current load at U9 output increases, current through R126 increases; Q35 turns on more, supplying more output current.

The output of U9 is the CENTER FREQ signal, which is a precise voltage proportional to the center frequency to which the analyzer is tuned in PER DIV mode, or proportional to the marker frequency in the FULL BAND, PER DIV F, and 1.7 – 22 GHz SPAN modes. The sensitivity at this point is + 1 mV per MHz. The CENTER FREQ signal goes to the DVM Analog Assembly, where the DVM Digital Assembly measures this voltage and digitally displays it as the FREQUENCY GHz readout. The CENTER FREQ signal also goes to the Full Multiband Assembly, where it is used in the Multiband Marker circuit.

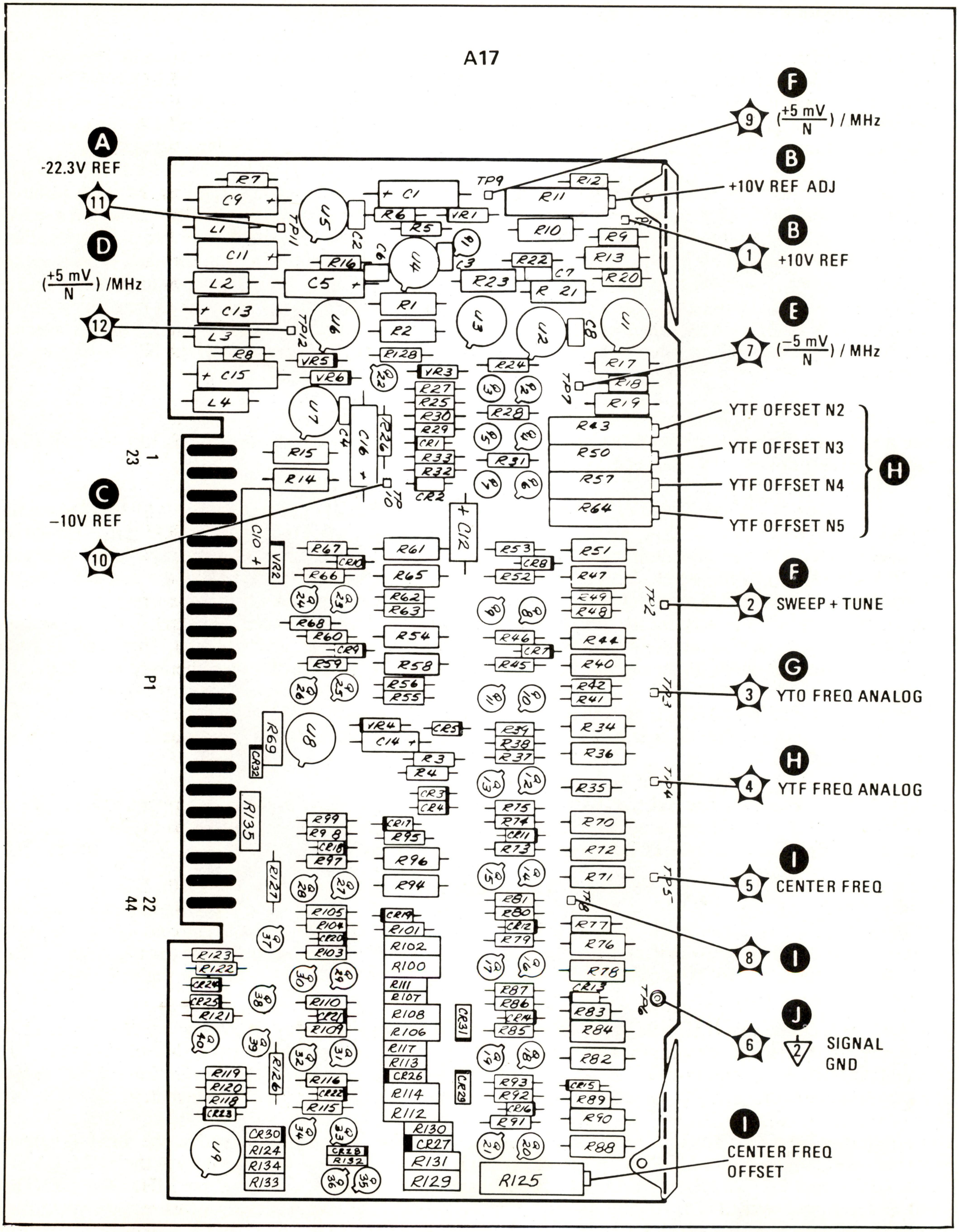

Figure 8-56. A17 Frequency Control Assembly, Component Locations

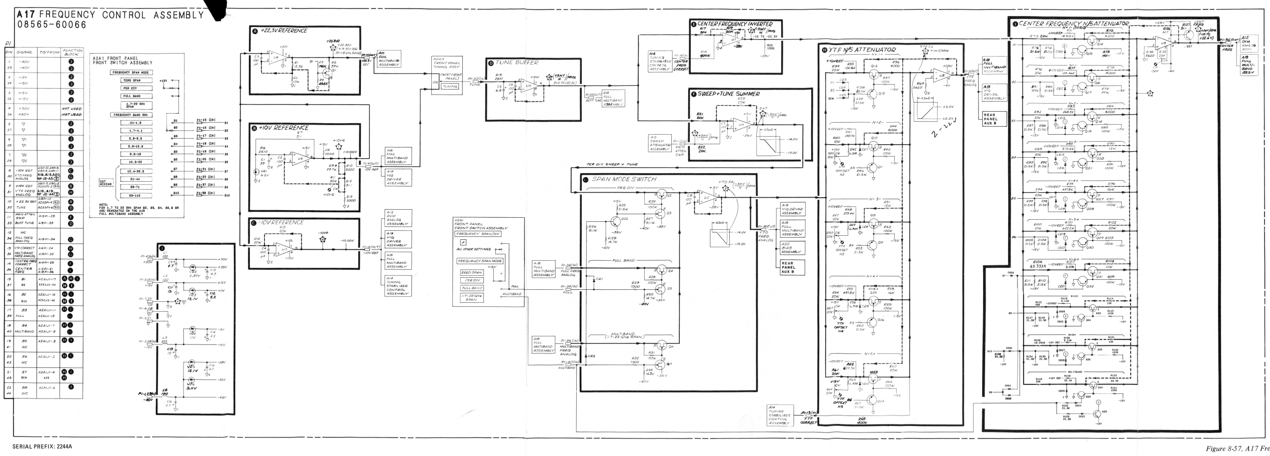

NOTES

1. REFERENCE DESIGNATORS WITHIN THIS ASSEMBLY ARE ABBREVIATED. FOR COMPLETE DESIGNATOR, PREFIX WITH ASSEMBLY REFERENCE DESIGNATOR.
2. UNLESS OTHERWISE INDICATED: RESISTANCE IN OHMS (Ω) CAPACITANCE IN MICROFARADS (μF) INDUCTANCE IN MICROHENRIES (μH)
3. * ASTERISK DENOTES FACTORY SELECTED COMPONENT. NOMINAL VALUE SHOWN.
4. TEST POINT WAVEFORMS ASSUME THE FOLLOWING SETTINGS: GREEN (NORMAL) SETTINGS FREQUENCY SPAN/DIV: 100 MHz FREQUENCY BAND: 1.7–4.1 GHz FREQUENCY: 3.000 GHz
5. TEST POINT SIGNAL VOLTAGE ARE REFERENCED TO SIGNAL GROUND ▽ 2 ON THIS ASSEMBLY. CONNECT THE LOW INPUT OF A DVM TO TP6 FOR MOST ACCURATE DC MEASUREMENTS. SET ANALYZER TO ZERO SPAN TO MEASURE DC VOLTAGES AT TP2, TP3, AND TP4.
6. TUNING SENSITIVITIES ($\frac{mV}{N}$/MHz) ARE FOR THE YTO (1ST LO) NTH HARMONIC. THE TUNING SENSITIVITIES FOR THE YTO FUNDAMENTAL ALWAYS HAVE N=1. SEE NOTE 7 FOR HARMONIC NUMBER (N) VERSUS FREQUENCY BAND.
7. FREQUENCY BANDS

FREQUENCY BAND GHZ	BAND LINE	HARMONIC NUMBER	SIGN	IF FREQ MHz
.01 - 1.8	B1	N=1	-	2050
1.7 - 4.1	B2	N=1	-	321.4
3.8 - 8.5	B3	N=2	-	321.4
5.8 - 12.9	B4	N=3	-	321.4
8.5 - 18	B5	N=4	+	321.4
10.5 - 22	B6	N=5	+	321.4
12.4 - 26.5	B7	N=6	+	321.4
21 - 44	B8	N=10	+	321.4
33 - 71	B9	N=16	+	321.4
53 - 115	B10	N=26	+	321.4

8. THERE ARE GUARD RING TRACES ON THE PC BOARD WHICH ARE NOT SHOWN ON THE SCHEMATIC. THESE TRACES GUARD SENSITIVE CIRCUIT POINTS FROM LEAKAGE CURRENTS.
9.

A17

Figure 8-57. A17 Frequency Control Assembly, Schematic Diagram

A18 FULL MULTIBAND ASSEMBLY, CIRCUIT DESCRIPTION

A18 Full Multiband Assembly contains circuits for spectrum analyzer operation in the full band modes of FULL BAND and PER DIV F (FREQUENCY SPAN/DIV in F) and also in the multiband mode 1.7 – 22 GHz SPAN. For the full band modes, the SWEEP from the Sweep Generator Assembly is offset and amplified in the FULL Sweep Amplifier, to provide the FULL FREQ ANALOG signal to the Frequency Control Assembly. There is also circuitry to control the Auto Sweep Time (AST), and to generate a marker for the full band modes.

In the multiband mode, the SWEEP ramp from the Sweep Generator Assembly is offset and amplified. Band Edge Comparators compare this ramp against fixed voltages that control the band transitions. The frequency band lines are sequentially switched by Band Logic circuits to display all five frequency ranges on a single sweep. The SWEEP ramp goes through a switched gain 5/N Amplifier, controlled by the frequency band lines, which then provides the MULTIBAND FREQ ANALOG signal to the Frequency Control Assembly. The frequency band lines also go to other assemblies to control mixer diode bias, flatness gain compensation, and the YTF N/5 Attenuator. There is also circuitry to generate the multiband marker. In PER DIV mode, there is an Over-Sweep blanking circuit that blanks the CRT trace when the frequency is swept beyond the frequency band edges.

Sweep + Offset Amplifier Ⓐ

This circuit amplifies and offsets a sweep ramp to produce a ramp for the multiband 1.7 – 22 GHz SPAN. The SWEEP ramp input (– 5V to + 5V) comes from the Sweep Generator Assembly. This signal goes to the negative input of op amp U4B. A reference voltage (+ 10V REF) from the Frequency Control Assembly also goes to the negative input of U4B, which is connected as an inverting amplifier with an inverted gain of 2.1 for the sweep ramp, and 1.21 for the offset. When the MULTIBAND line is not active (open circuit at the front panel), – 15V through R3 and CR2 is applied to the negative input of U4B, which offsets the multiband ramp sufficiently so that none of the Band Edge Comparators will be driven positive. When the 1.7 – 22 GHz SPAN mode is selected, the MULTIBAND line is activated (+ 15V), CR2 is reverse biased, and R3 causes no offset. Op amp U3A is a unity gain inverting amplifier. Its output is the MB RAMP, which has a voltage range of + 1.7V to + 22.5V (see Figure 8-58).

Band Edge Comparators Ⓑ

This circuit consists of four comparators that sequentially go positive at the frequency band switching points of the multiband span. The + 22.3V REF voltage from the Frequency Control Assembly is applied to the resistive voltage divider consisting of R7 through R11. Voltages from this divider go to the negative inputs of op amps U1A, U1B, U2A, and U2B, which are connected as voltage comparators. The multiband sweep, MB RAMP, from the output of U3A, is applied to the positive inputs of U1A, U1B, U2A, and U2B. The output of each comparator is approximately – 3V when the positive input is at a lower voltage than the negative input. When the voltage at the positive input exceeds that at the negative input, the output will be approximately + 24V. The op amps U1B, U1A, U2B, and U2A go positive in sequence during a single sweep ramp. The output of each remains positive until the next sweep ramp is started (see Figure 8-58). The comparator outputs go to both the Band Logic and the Stop Sweep triggers.

Band Logic Ⓒ

The outputs of the Band Edge Comparators (U2A, U2B, U1A, and U1B) drive the Band Logic transistors, where five band lines (B2 through B6) are activated in sequence during one multiband sweep (see Figure 8-58). When the outputs of all comparators are negative, Band 2 transistor Q5 is turned on, providing + 14V on line B2. The emitter of Q5 is at + 14V only when the MULTIBAND line is activated (+ 15V); otherwise it is open. When the output of U1B goes positive (+ 24V), Q5 is turned off and the inverter Q24 is turned off, which turns on Q4 to provide + 15V on line B3. At the next band edge, when U1A has a positive output, Q4 is turned off by

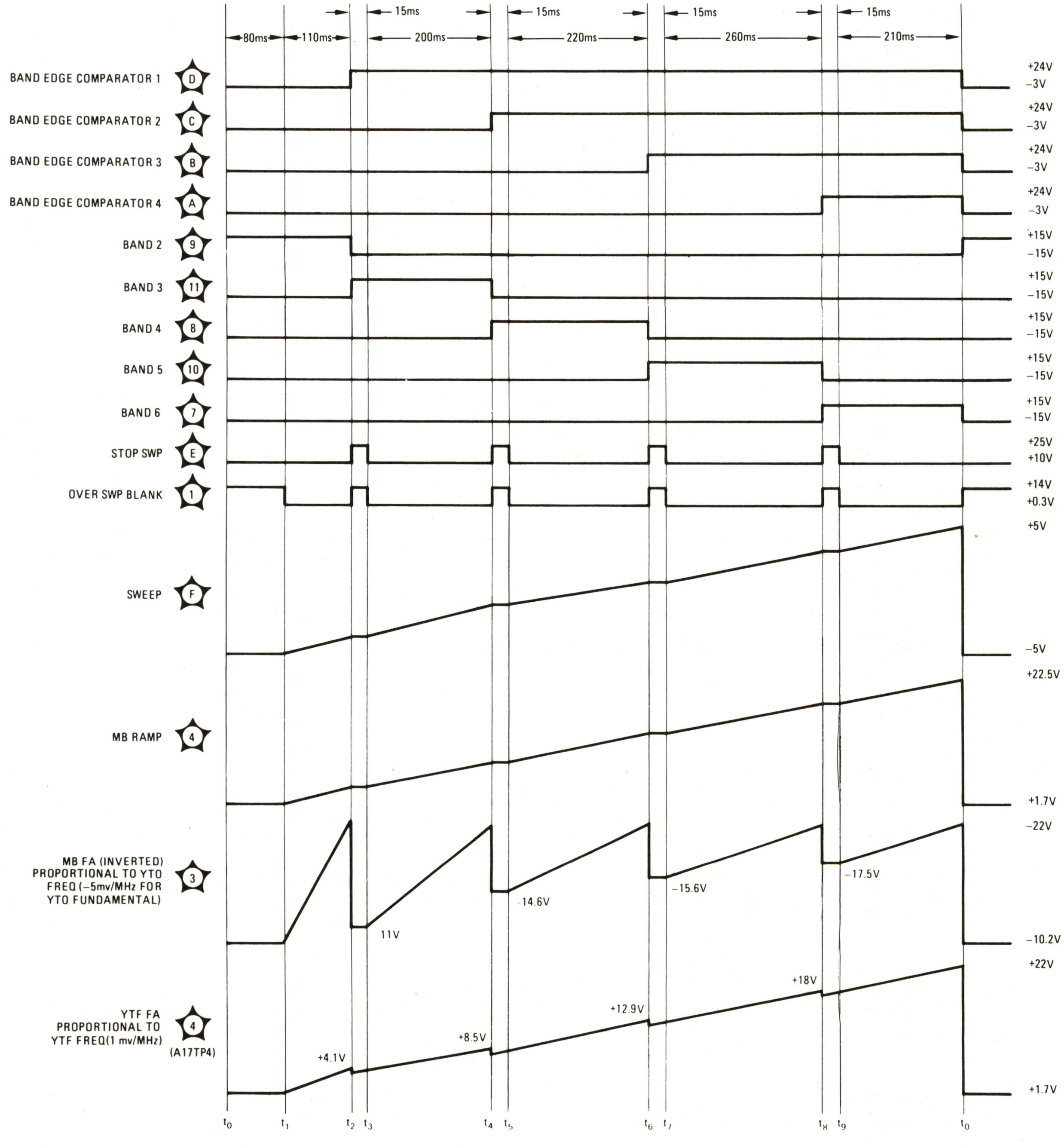

Figure 8-58. A18 Full Multiband Assembly, Timing Diagram

this voltage applied through CR8. Q23 is also turned off, which turns on Q3 to provide +15V on line B4. The circuits for Band 5 and Band 6 work in the same manner. In the multiband mode, the FREQUENCY BAND GHz switch on the front panel is disconnected and the band lines activated in this circuit go to other assemblies to control mixer diode bias, flatness gain compensation, and the N/5 Attenuator.

Stop Sweep Triggers (E)

The Band Edge Comparators drive the Stop Sweep Triggers, which stop the sweep for approximately 15 ms while the spectrum analyzer is switching from one band to the next (see Figure 8-58). Since there are four identical Stop Sweep Triggers, the operation of only one of these will be described. When the output of U2A goes from negative to positive, this transition is coupled through C1 and R31 to the base of Q21, momentarily turning it on. This shunts the collector of Q21 to ground, which turns on Q25. When Q25 is on, +25V is applied through CR14 to the Sweep Generator Assembly, where this STOP SWP signal stops the sweep at its current level and holds it there until the line is opened. The output from Q25 is also ORed into the OVER SWEEP BLANK line through CR13 so that the CRT is blanked while the sweep is stopped.

5/N Amplifier (F)

The multiband sweep, MB RAMP, (+1.7V to +22.5V) from the Sweep + Offset Amplifier circuit, goes to the 5/N Amplifier where it is amplified and offset an amount selected by the band lines B2 through B6, which are activated in the Band Logic circuit. These band lines are activated in sequence during a single sweep. The output of this stage is the MULTIBAND FREQ ANALOG signal (proportional to the YTO frequency) that goes to the Frequency Control Assembly, where it is switched to the YTO FREQ ANALOG line (see Figure 8-54). The YTO FREQ ANALOG signal then goes to the YIG Driver Assembly to drive the YTO Main Coil. The MULTIBAND FREQ ANALOG signal has a level of −5 mV per MHz divided by the harmonic number N (see schematic Notes 5 and 6).

The 5/N Amplifier circuit has op amp U4A connected as an inverting amplifier in which different sets of input and feedback resistors are selected by FET switches. There are five nearly identical sections, which are switched in one at a time. They provide inverted gains of 5/N, where N = 1 to 5. The operation of the N = 5 section will be described. When the B6 line is not activated (open circuit at the source in the Band Logic circuit), Q16 has approximately −15V at both the base and the emitter. This is enough reverse bias at the gate of Q15 to keep it turned off. There is a pull-down resistor at −15V for the B6 line, which is located in the Frequency Control Assembly.

When the B6 line is activated (+15V), Q16 is turned on with the base at approximately +0.6V and the emitter at 0V, connecting the gate of Q15 to ground. Now Q15 is no longer reverse biased by R45, but is turned on because the source and gate are at the same potential. (The source is at a virtual ground because of the operation of U4A.) With Q15 on, the input resistors R41 and R43 and the feedback resistor R42 are connected to the negative input U4A, giving an inverted gain of 1 (5/5) to the sweep ramp. R43 provides an offset to account for the 321.4 MHz. It also provides a slight overlap of frequencies between bands to ensure that there will be no gaps.

With Q15 on, CR15 has no effect; but when Q15 and this section are off, CR15 clamps the drain voltage of Q15 at −0.6V. This prevents Q15 from being turned on by the output of U4A via R42. This diode is not necessary for the N = 1 section.

When the B5 line is activated (+14V), the N = 4 section is switched in, giving an inverted gain of 1.25 (5/4) to the sweep. The B4, B3, and B2 lines respectively, switch in the N = 3, N = 2, and N = 1 sections for inverted gains of 1.67, 2.5 and 5.

Oversweep Blanking (D)

This circuit provides a blanking signal which goes to the Z Axis Amplifier Assembly and blanks the CRT when the frequency is swept more than a slight margin beyond the band edges. Nominally, it blanks the CRT when the sweep exceeds the frequency range of the coarse TUNING control, which is slightly larger than the specified

band edges. The YTO FREQ ANALOG signal from the Frequency Control Assembly is applied to the negative input of U3B, which is connected as an inverting unity gain amplifier. The output from U3B goes to the positive input of U7A and to the negative input of U7B, which are op amps connected as comparators. Reference voltage +10V REF is applied to the positive input of U7B and reference voltage +22.3V REF to the negative input of U7A. These two voltages are the voltages at the limits of the coarse TUNING potentiometer. For a sweep plus tune voltage at output of U3B between +10V and +22.3V, the outputs of both U7A and U7B are negative (about −3V), and are isolated from the OVER SWP BLANK line by CR11 and CR12. If the output of U3B is less than +10V, U7B goes positive to about +24V for that part of the frequency span. The output of U7B goes through CR12 and R30 to the Z Axis Amplifier Assembly, blanking the CRT. If the output of U3B is greater than +22.3V, U7A goes positive to about +24V for that portion of the frequency span. The output of U7A goes through CR11 and R30 to the Z Axis Amplifier Assembly to blank the CRT. For narrow frequency spans (1 kHz/DIV to 2 MHz/DIV), and for the ZERO SPAN mode, the NARROW line is activated (+15V), which turns on Q2 and shunts the OVER SWP BLANK line to ground. This disables the oversweep blank function for narrow frequency spans. For wide frequency spans,no more than half the CRT trace is blanked.

Full Sweep Amplifier (H)

The SWEEP ramp from the Sweep Generator Assembly goes to this stage, where it is amplified and offset an amount as selected by the band lines B1 through B6 and BEM from the FREQUENCY BAND GHz switch. The output of this stage is the FULL FREQ ANALOG signal (proportional to the YTO frequency) that goes to the Frequency Control Assembly, where it is switched to the YTO FREQ ANALOG line. The YTO FREQ ANALOG signal then goes to the YIG Driver Assembly to drive the YTO Main Coil.

This stage has op amp U8A connected as an inverting amplifier in which different sets of input and feedback resistor are selected by FET switches. There are three nearly identical sections, which are switched in one at a time. These sections are similar to those in the 5/N Amplifier circuit. (Refer to that circuit for operation of a typical section.) When the B1 line is activated (+15V), the B1 section is switched in, giving an inverted gain of 0.91 for the sweep and 1.47 for the +10V REF. When the B2, B3, B4, B5, or BEM line is activated (+15V), the corresponding section is switched in, giving an inverted gain of 1.22 for the sweep and 1.61 for the +10V REF. When the B6 line is activated (+15V), the corresponding section is switched in, giving a gain of 1.16 for the sweep and 1.59 for the +10V REF. The FULL FREQ ANALOG output is −5 mV per MHz divided by the harmonic number N (see schematic Notes 5 and 6).

AST Full Span (G)

With the SWEEP TIME/DIV switch set to AUTO, the sweep time is automatically controlled by the Auto Sweep Time (AST) circuits. The sweep time is varied as a function of RESOLUTION BW, FREQUENCY SPAN/DIV, and VIDEO FILTER settings to maintain absolute amplitude calibration. In the PER DIV F mode, this circuit controls the sweep time as a function of the FREQUENCY BAND GHz setting. In the FULL BAND mode, the circuit is switched in but has no effect on sweep time because the RESOLUTION BW and VIDEO FILTER are fixed respectively at 3 MHz and .003. Under these conditions the sweep time is determined solely by the Current Limit circuit in the Sweep Generator Assembly.

In FULL BAND or PER DIV F, the FULL line is activated (+15V), and this signal through CR39 turns on Q33 to connect CR21, CR22, CR23, CR24, CR25, and CR26 to ground.

There are six identical AST switches for the bands B1 through B6 (see schematic Note 6). The operation of the Band 6 AST circuit will be described. When Band 6 is selected (10.5−22 GHz) by the FREQUENCY BAND GHz switch, the B6 line is activated (+15V), which turns on Q27 to connect the Band 6 AST resistor R68 to ground through CR21 and Q33. The other end of R68 is connected through CR19 to the AST BW-FS line. Switching the AST resistors in controls the current in the AST BW-FS line, which in turn controls the sweep time of the sweep ramp generated in the Sweep Generator Assembly. The lower the resistance, the faster the sweep speed.

Multiband Marker (I)

This circuit provides the marker for the multiband 1.7 – 22 GHz SPAN mode. When not in 1.7 – 22 GHz SPAN mode, the MULTIBAND line is not activated, and – 15V through R100 and CR35 is applied to the negative input of U5A, which offsets the ramp sufficiently to disable the Multiband marker. When the MULTIBAND line is activated (+15V), VR35 is reverse biased, and R100 causes no offset. Op amp U8B inverts the YTF FREQ ANALOG signal from the Frequency Control Assembly. This signal is proportional to the frequency to which the spectrum analyzer is swept in the multiband mode (– 1 mV/MHz). Op amp U5A is an inverting amplifier with a gain of 50. The CENTER FREQ line from the Frequency Control Assembly is proportional to the FREQUENCY GHz readout (+1 mV/MHz). The YTF FREQ ANALOG and CENTER FREQ voltages are summed through R98 and R99 at the negative input of U5A. When the two inputs are near the same absolute level, the output of U5A is a positive-going ramp. The output of op amp U5B, an inverting unity gain amplifier, is a negative-going ramp when the output of U5A is a positive-going ramp. As long as the output of U5B is greater than that of U5A, the output at the junction of CR36 and CR37 will be a negative-going ramp from U5B. When the output of U5B is less than that of U5A, the output at the junction of CR36 and CR37 will be a positive-going ramp from U5A. This generates a positive V-shaped pulse with its apex at 0V. R104 and R105 offset the "V" pulse so that its apex is at approximately – 6V. CR38 allows this marker to be ORed with the Full Marker. The MARKER pulse generated goes to the Video Assembly, where it is added to the vertical signal to produce a "V" notch marker on the CRT trace at the frequency corresponding to that on the FREQUENCY GHz display.

Full Marker (J)

This circuit provides the marker in the full span modes of FULL BAND and PER DIV F. When not in a full span mode, the FULL line is not activated and – 15V through R108 and CR40 is applied to the negative input of U6A. This offsets the ramp sufficiently to disable the FULL marker. When in a full span mode, the FULL line is activated (+15V), CR40 is reverse biased, and R108 causes no offset. Op amp U6A is an inverting amplifier with a gain of 50. The BUFF TUNE signal from the Frequency Control Assembly is proportional to the FREQUENCY GHz readout, and also to the center frequency in PER DIV mode (+5 mV/MHz). The FULL FREQ ANALOG signal is proportional to the frequency to which the spectrum analyzer is swept in the full band modes (– 5 mV/MHz). The BUFF TUNE and FULL FREQ ANALOG voltages are summed through R106 and R107 at the negative input of U6A. When the two inputs are near the same absolute level, the output of U6A will be a positive-going ramp. The output of op amp U6B, an inverting unity gain amplifier, is a negative-going ramp when the output of U6A is a positive-going ramp. As long as the output of U6B is greater than the output of U6A, the signal at the junction of CR41 and CR42 will be a negative-going ramp from the output of U6B. When the output of U6B is less than that of U6A, the output at the junction of CR41 and CR42 will be a positive-going ramp taken from U6A. This generates a positive V-shaped pulse with its apex at 0V. R112 and R113 offset this "V" pulse so that its apex is at approximately – 6V. CR43 allows this marker to be ORed with the Multiband Marker. The MARKER pulse generated goes to the Video Assembly, where it is added to the vertical signal to produce a "V" notch marker on the CRT trace at the frequency corresponding to that on the FREQUENCY GHz display.

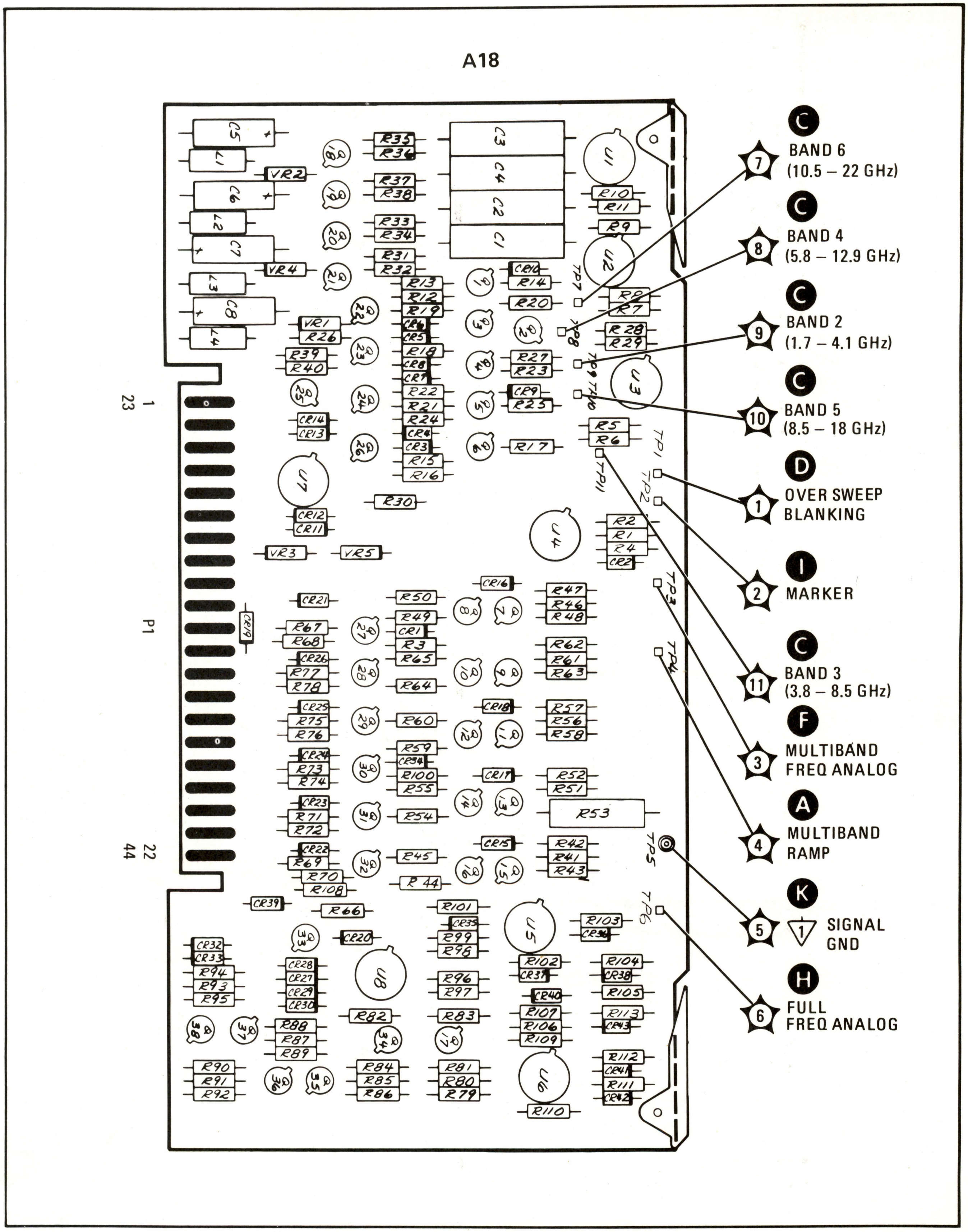

Figure 8-59. A18 Full Multiband Assembly, Component Locations

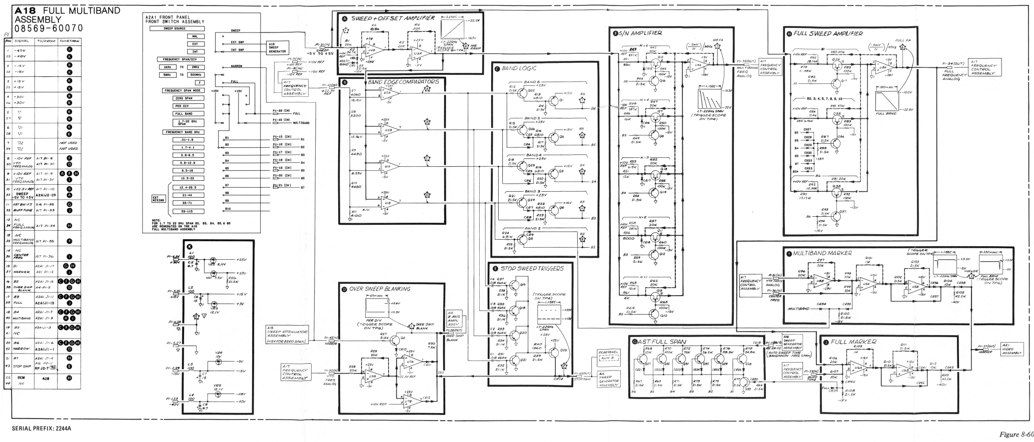

SERIAL PREFIX: 2244A

NOTES

1. REFERENCE DESIGNATORS WITHIN THIS ASSEMBLY ARE ABBREVIATED. FOR COMPLETE DESIGNATOR, PREFIX WITH ASSEMBLY REFERENCE DESIGNATOR.
2. UNLESS OTHERWISE INDICATED:
   RESISTANCE IN OHMS (Ω)
   CAPACITANCE IN MICROFARADS (μF)
   INDUCTANCE IN MICROHENRIES (μH)
3. TEST POINT WAVEFORMS ASSUME FOLLOWING SETTINGS:
   GREEN (NORMAL) SETTINGS
   FREQUENCY SPAN/DIV: 100 MHz
   FREQUENCY BAND: 1.7–4.1 GHz
   FREQUENCY: 3.800 GHz
   FREQUENCY SPAN MODE: AS INDICATED
4. TEST POINT SIGNAL VOLTAGES ARE REFERENCED TO SIGNAL GROUND ▽1 ON THIS ASSEMBLY. CONNECT THE LOW INPUT OF A DVM TO TP5 FOR MOST ACCURATE DC MEASUREMENTS. SET ANALYZER TO MNL SWEEP SOURCE TO MEASURE DC VOLTAGES AT TP3, TP4, AND TP6.
5. TUNING SENSITIVITIES ($\frac{mV}{N}$/MHz) ARE FOR THE YTO (1ST LO) NTH HARMONIC. THE TUNING SENSITIVITIES FOR THE YTO FUNDAMENTAL ALWAYS HAVE N=1. SEE NOTE 6 FOR HARMONIC NUMBER (N) VERSUS FREQUENCY BAND.
6. FREQUENCY BANDS

FREQUENCY BAND GHZ	BAND LINE	HARMONIC NUMBER	SIGN	IF FREQ MHZ
.01 - 1.8	B1	N=1	-	2050
1.7 - 4.1	B2	N=1	-	321.4
3.8 - 8.5	B3	N=2	-	321.4
5.8 - 12.9	B4	N=3	-	321.4
8.5 - 18	B5	N=4	+	321.4
10.5 - 22	B6	N=5	+	321.4
12.4 - 26.5	B7	N=6	+	321.4
21 - 44	B8	N=10	+	321.4
33 - 71	B9	N=16	+	321.4
53 - 115	B10	N=26	+	321.4

7. THERE ARE GUARD RING TRACES ON THE PC BOARD WHICH ARE NOT SHOWN ON THE SCHEMATIC. THESE TRACES GUARD SENSITIVE CIRCUIT POINTS FROM LEAKAGE CURRENTS.
8. TOP VIEW Q9, 11, 13, 15, 34, 35, 38.

A18

Figure 8-60. A18 Full Multiband Assembly, Schematic Diagram

A19 YIG DRIVER ASSEMBLY, CIRCUIT DESCRIPTION

A19 YIG Driver Assembly contains circuits that tune the YIG-Tuned Oscillator (YTO) over the frequency range from 2.00 GHz to 4.46 GHz. Tuning is accomplished by controlling the current (which is proportional to frequency) in the YTO Main Coil. Also in this assembly are the circuits that tune the YIG-Tuned Filter (YTF) preselector over the frequency range from 1.7 GHz to 22 GHz. Tuning is accomplished by controlling the current (which is proportional to frequency) in the YTF coil. E1 through E14 are insulated terminals that are used to reduce leakage currents to sensitive signal paths.

– 20V Reference Supply (A)

Op amp U1 is connected as a non-inverting amplifier with a gain of 2. A reference voltage (– 10V REF) from the Frequency Control Assembly is applied to the non-inverting (+) input of U1, providing a – 20.0V reference voltage at the output.

YTO Main Coil Predriver (B)

The main input to this stage is the YTO FREQ ANALOG signal which comes from the Frequency Control Assembly. This is a precise voltage equal to – 5 mV per MHz for fundamental (N = 1) mixing mode. For harmonic mixing bands, this voltage is divided by the harmonic number N (see schematic Notes 5 and 6). For narrow frequency spans (1 kHz/DIV to 2 MHz/DIV) and for ZERO SPAN mode, the voltage from the TUNING control determines the YTO FREQ ANALOG voltage. For wide frequency spans (5 MHz/DIV to 500 MHz/DIV), the attenuated sweep ramp is summed with the voltage from the TUNING control in the Frequency Control Assembly to produce the YTO FREQ ANALOG voltage. For the full band modes (FULL BAND and PER DIV F) and for the multiband mode (1.7 – 22 GHz SPAN), the FULL BAND FREQ ANALOG or the MULTIBAND FREQ ANALOG voltage is generated in the Full Multiband Assembly and switched to the YTO FREQ ANALOG line in the Frequency Control Assembly. The YTO FREQ ANALOG signal goes through R8, R9, and R10 to the negative input of op amp U3. This stage is an inverting amplifier with a gain of 0.5 for the YTO FREQ ANALOG voltage, with the YTO GAIN adjustment R8 at its nominal position.

A reference voltage (– 20V REF) from U1 is applied through the voltage divider R4 and R11 to put – 10.25V at the positive input of U3. The – 20V REF also goes through R5, R6, and R7 to the negative input of U3, where it cancels most of the offset that was introduced at the positive input. YTO OFFSET R5 is adjusted to tune the YTO to 2.05 GHz when – 10.25V is applied to the YTO FREQ ANALOG input. The negative input of U3 is at a virtual potential equal to the voltage at the positive input of U3 (i.e., – 10.25), because of the operation of the op amp. Thus with the YTO FREQ ANALOG voltage at – 10.25V, the YTO GAIN adjustment R8 has no effect because there is no current through it. This makes the YTO GAIN adjustment non-interacting with the YTO OFFSET adjustment, when the latter is first adjusted with the YTO FREQ ANALOG voltage at – 10.25V. The YTO GAIN adjustment is then adjusted to tune the YTO to 4.4 GHz when – 22V is at the YTO FREQ ANALOG input. C1 is placed across the input of U3 to reduce its susceptibility to external RF interference.

YTF Coil Predriver (C)

The main input to this stage is the YTF FREQ ANALOG signal that comes from the Frequency Control Assembly. This is a precise voltage equal to + 1 mV per MHz. This voltage varies from + 1.7V to + 22V as the YTF is tuned from 1.7 to 22 GHz. The YTF FREQ ANALOG signal goes through R17, R18, and R19, and also through R20 and C2 (a speed-up circuit to compensate for some of the magnetic delay in the YTF coil) to the negative input of op amp U4. This stage is an inverting amplifier with a gain of 0.9 for the YTF FREQ ANALOG voltage, when the YTF GAIN adjustment R17 is at its nominal position.

The + 10V reference voltage (+ 10V REF) from the Frequency Control Assembly is applied through the voltage divider R13 and R25 to put + 2.00V at the positive input of U4. The + 10V REF also goes through R14, R15, and R16 to the negative input of U4, where it cancels the offset that was introduced at the positive input. The YTF OFFSET adjustment R14 is adjusted to tune the YTF to 2.00 GHz when + 2.00V is at the YTF FREQ ANALOG input. The negative input of U4 is at a virtual potential equal to the voltage at the positive input of

U4 (i.e., +2.00 V), because of the operation of the op amp. Thus with the YTF FREQ ANALOG voltage at +2.00V, the YTF GAIN adjustment R17 has no effect, because there is no current through it. This makes the YTF GAIN adjustment non-interacting with the YTF OFFSET adjustment when the latter is first adjusted with the YTF FREQ ANALOG voltage at +2.00V. The YTF GAIN adjustment is then adjusted to tune the YTF to 10 GHz when +10.00V is at the YTF FREQ ANALOG input. The YTF GAIN and OFFSET adjustments are made with the front-panel PRESELECTOR PEAK control at mid-position. PRESELECTOR PEAK control varies the YTF passband for best YTO-YTF tracking and display amplitude accuracy. It adjusts the offset of the YTF over a range of approximately ±40 MHz.

The YTF Track switch, S1, is switched to the TEST position for adjusting the YTF OFFSET and YTF GAIN adjustments. With the spectrum analyzer in ZERO SPAN and AUTO STABILIZER OFF, a signal is applied to the analyzer input. When the analyzer is tuned to that frequency, the YTF passband at that particular frequency will be swept and displayed on the CRT. This display has a calibration of about 20 MHz/DIV. (The actual passband of the YTF is the reverse of that seen on the CRT.) In the TEST position of S1, a sweep ramp of −5V to +5V is applied through R21, S1, and R24 to the negative input of U4, sweeping the YTF. In the NORM position of S1, R22 is connected from R24 to ground, thus presenting the same resistance to the negative input of U4 in NORM as in TEST. This is done so there will be no offset difference between the two settings. The YTF MOD input through C3 enables the YTF offset to be modulated for the test purpose of adjusting and checking tracking and amplitude flatness.

YTO Main Coil Driver (D)

The signal from the output of the YTO Main Coil Predriver is applied to op amp U2 of the YTO Main Coil Driver circuit. This driver produces current for the Main Coil of the YTO that is proportional to the input voltage of this stage. Q1, Q2, and Q3 are connected in a three-transistor Darlington configuration to provide the necessary current capability and accuracy.

The current through the sense resistor R34, which differs from the current in the Main Coil by only a small amount, produces a voltage across R34 which is sensed differentially. At the transistor side of R34, the signal is applied as negative feedback through R30 to the negative input of U2. A slight amount of positive feedback from the ground side of R34 is applied through R29 to the positive input of U2. This stage has a voltage-to-current conversion of 104 mV/mA. CR1 and VR3 clamp the YTO COIL + voltage during retrace at approximately −125V (−83V across the YTO Main Coil) to provide flyback voltage limiting for Q1, Q2, and Q3. C4 is placed across the input of U4 to reduce its susceptibility to external RF interference.

For narrow frequency spans (1 kHz/DIV to 2 MHz/DIV) and for ZERO SPAN mode, the NARROW line is activated (+14V), turning on relay K1, which shunts R36 to put C5, C6, and C7 (along with the series resistor R35) across the YTO Main Coil. This filter reduces the noise applied to the Main Coil when it is not being swept. R36 allows C5, C6, and C7 to be charged when the relay is open, so that there will not be a large jump in frequency when it is closed. CR8 provides flyback voltage clamping of the relay coil.

YTF Coil Driver (E)

The signal from the output of the YTF Coil Predriver is applied to op amp U5 of the YTF Coil Driver. This driver produces current for the YTF Coil that is proportional to the input voltage to this stage. Q4, Q5, and Q6 are connected in a three-transistor Darlington configuration to provide the necessary current capability and accuracy.

The current through the sense resistor R59, which differs from the current in the coil by only a small amount, produces a voltage across R59 which is sensed differentially. At the transistor side of R39, the signal is applied as negative feedback through R55 to the negative input of U5. A slight amount of positive feedback from the ground side of R59 is applied through R54 to the positive input of U5. This stage has a voltage-to-current conversion of 67.7 mV/mA. CR7 and VR4 clamp the YTF voltage during retrace at approximately −125V (−83V across the YTF Coil), providing flyback voltage limiting for Q4, Q5, and Q6.

Above 10 GHz, the relationship of current versus YTF frequency is nonlinear and requires compensation. The Linearity Correction circuit provides piecewise linearity correction in five segments. Since the same circuit configuration is used for each segment, only the operation for the YTF LIN 18 adjustment will be described. The YTF LIN 18 adjustment, R45, is adjusted to track the YTF to the YTO at 18 GHz. The breakpoint of this segment, where it begins to have an effect, is approximately at 16 GHz. R43 and R44 form a voltage divider with a voltage of −4.7V at their junction. When the YTF is tuned to 16 GHz, the voltage at TP8 is −5.3V. This is one diode drop (0.6V) lower than the voltage at the junction of R43 and R44, which (because of CR4) is just enough to start current through R45. R45 and R43 shunt the sense resistor R59, raising the gain of the stage for frequencies above approximately 16 Ghz and compensating for the lower tuning sensitivity of the YTF at higher frequencies. For frequencies below 16 GHz, CR4 is reverse biased, and the YTF LIN 18 circuit has no effect.

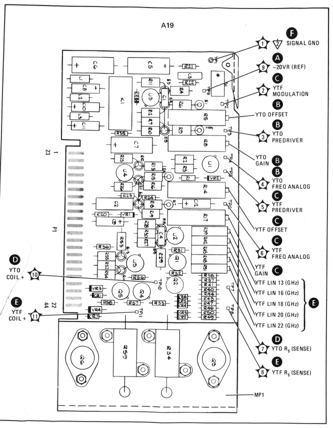

Figure 8-61. A19 YIG Driver Assembly, Component Locations

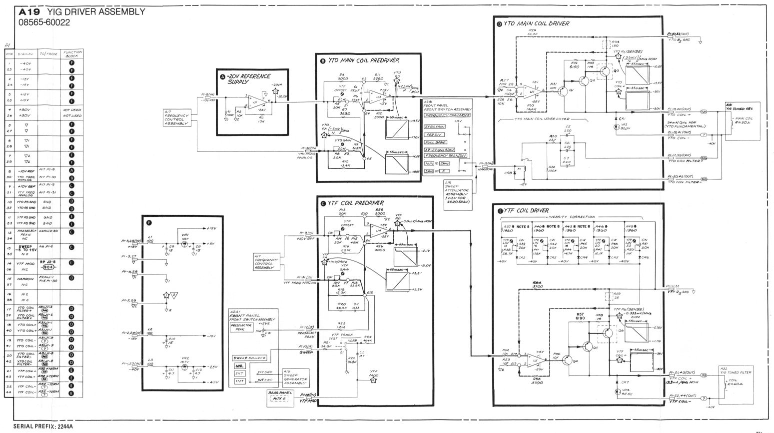

NOTES

1. REFERENCE DESIGNATORS WITHIN THIS ASSEMBLY ARE ABBREVIATED. FOR COMPLETE DESIGNATOR PREFIX WITH ASSEMBLY REFERENCE DESIGNATOR.
2. UNLESS OTHERWISE INDICATED:
   RESISTANCE IN OHMS (Ω)
   CAPACITANCE IN MICROFARADS (μF)
   INDUCTANCE IN MICROHENRIES (μH)
3. TEST POINT WAVEFORMS ASSUME THE FOLLOWING SETTINGS:
   GREEN (NORMAL) SETTINGS
   FREQUENCY SPAN/DIV: 100 MHz
   FREQUENCY BAND: 1.7–4.1 GHz
   FREQUENCY: 3.000 GHz
4. TEST POINT SIGNAL VOLTAGES ARE REFERENCED TO SIGNAL GROUND ▽2 ON THIS ASSEMBLY. CONNECT THE LOW INPUT OF A DVM TO TP1 FOR MOST ACCURATE DC MEASUREMENTS. SET ANALYZER TO ZERO SPAN TO MEASURE DC VOLTAGES AT TP3, TP4, TP6, TP7, TP8, TP10 AND TP11.
5. TUNING SENSITIVITIES ($\frac{mV}{N}$/MHz) ARE FOR THE YTO (1ST LO) NTH HARMONIC. THE SENSITIVITES FOR THE YTO FUNDAMENTAL ALWAYS HAVE N=1. SEE NOTE 6 FOR HARMONIC NUMBER (N) VERSUS FREQUENCY BAND.
6. FREQUENCY BANDS

FREQUENCY BAND GHZ	BAND LINE	HARMONIC NUMBER	SIGN	IF FREQ MHZ
.01 - 1.8	B1	N=1	-	2050
1.7 - 4.1	B2	N=1	-	321.4
3.8 - 8.5	B3	N=2	-	321.4
5.8 - 12.9	B4	N=3	-	321.4
8.5 - 18	B5	N=4	+	321.4
10.5 - 22	B6	N=5	+	321.4
12.4 - 26.5	B7	N=6	+	321.4
21 - 44	B8	N=10	+	321.4
33 - 71	B9	N=16	+	321.4
53 - 115	B10	N=26	+	321.4

7. THERE ARE GUARD RING TRACES ON THE PC BOARD WHICH ARE NOT SHOWN ON THE SCHEMATIC. THESE TRACES GUARD SENSITIVE CIRCUIT POINTS FROM LEAKAGE CURRENTS. E1 THRU E14 ARE TERMINALS THAT ISOLATE SENSITIVE CIRCUIT POINTS FROM LEAKAGE CURRENTS.
8. R37*, R40*, OR R43* MIGHT BE LOADED AS OPEN.

A19

Figure 8-62. A19 YIG Driver Assembly, Schematic Diagram

A20 BIAS ASSEMBLY, CIRCUIT DESCRIPTION

A20 Bias Assembly has two functions. It biases the Schottky mixer diode, the PIN diode switch, and the buffer MOSFET (metal semiconductor field-effect transistor) in A30 First Mixer Assembly, and it controls the gain of A28 Variable Gain Assembly to compensate for variations in conversion efficiency as a function of frequency.

Sweep + Tune Inverter (A)

The input to this circuit is a −10V to −22.3V ramp, the YTO FREQ ANALOG from A17 Frequency Control Assembly. The output is a ramp voltage, 0V to +13V, that is then processed by the band compensation amplifiers to control the Non-Linear Current Source.

Band 1 Compensation (B)

Refer to Band 4 Compensation (E).

Band 2 Compensation (C), Band 3 Compensation (D), Band 7 Compensation (L), Band 8 Compensation (M), Band 9 Compensation (N), and Band 10 Compensation

When Band 2 is selected, the B2 line goes to +15V, turning on FET Q2. This enables U2B to set the base voltage, and hence the attenuating current, of Q7 in the Non-Linear Current Source.

The output of the Band 2 Compensation circuit is the sum of three voltages: the output of U2B, the voltage set by B2A potentiometer R22, and the voltage at the input side of R19. At the low end of Band 2, however, the output is affected by R22 only, because the other two voltages are zero. As frequency increases, the other voltages come into play, pulling the output in opposite directions. If the gain of the inverting op amp is set to zero by B2B potentiometer R18, R19 pulls the output high to increase attenuation as a function of frequency. If R18 is adjusted fully clockwise, the attenuation decreases as a function of frequency.

The Band 3 Compensation circuit is identical in operation to the Band 2 Compensation circuit. The Band 7 – 10 Compensation circuits are identical in operation to the Band 2 Compensation circuit.

Band 4 Compensation (E)

The Band 1, Band 4, Band 5, and Band 6 Compensation circuits are similar to the Band 2 Compensation circuit except that additional stages allow more compensation to be added at different frequencies. Zener diodes VR1 through VR6 determine at what frequency the added gain is available. The feedback adjustments on the op amps determine the amount of added gain.

Since these four circuits are almost identical, only the Band 4 Compensation circuit is described in detail. The voltage at the cathode of VR2 (0V to +13V ramp) increases as the instrument sweeps through the band, and the diodes VR2 and VR3 are turned on in sequence. For the first 25 percent of the band, neither VR2 nor VR3 conducts, so the voltage at the output (and therefore the gain) is determined only by B4A potentiometer R40. Beyond the 25-percent point of the band, VR2 conducts, allowing U3B to affect the output voltage. The amount of its effect is determined by B4B potentiometer R36. Beyond the 60-percent point, VR3 also conducts, allowing U3A to affect the output voltage. The amount of its effect is determined by B4C potentiometer R35.

Band 5 Compensation (F) and Band 6 Compensation (G)

The Band 5 and Band 6 Compensation circuits are identical in operation to the Band 4 Compensation circuit.

Non-Linear Current Source (H)

This circuit sinks varying amounts of current from the PIN attenuator diodes in A28 Variable Gain Assembly. The higher the input voltage to U12, the more current is sunk through the attenuating codes, causing the gain of A28 Variable Gain Assembly to decrease.

Mixer Diode Bias (I)

The bias of the mixer diode in A30 First Mixer Assembly depends on the harmonic mixing number. For B3, conventional resistive biasing is used. In Band 3 (B3 line goes to +15V), the output of U8B goes low. Optimum flatness is realized by adjusting V3 potentiometer R77.

For the other harmonics, B1, B2, B4, B5, and B6, the mixer diode is driven by a virtual negative resistance. This helps to keep the conduction angle constant as a function of local oscillator (LO) power into the mixer diode. For example, in Band 4 (B4 line goes to +15V), Q9 is turned on and the output voltage is partially determined by V4 adjustment R85. The current through R90, which is also the current through the mixing diode is sensed by U8A, and the output changes to maintain the same conduction angle for the diode. If the output of U8A is monitored with an oscilloscope at TP5 during full band operation, the waveform should be irregular with at least a 0.5V peak-to-peak ripple, indicating that U8A is correcting for fluctuations in LO output power as a function of frequency.

PIN Diode Driver (J)

A30 First Mixer Assembly is optimized for the high end of the operating frequency range. To maintain good performance at the low end, Band 1, a tank circuit in the First Mixer Assembly is switched into the mixer circuitry by a PIN diode when the B1 line goes to +15V. Q13 is a current sink for the pin diode. When the B1 line goes low (open), Q13 is turned off; the voltage divider of R114 and R116 produces +20V, reverse biasing the pin diode and turning it off.

Power Supplies (K)

The power supplies include filters for the +15V and −15V supplies, and a regulator to generate the +5V DRAIN BIAS for the buffer MOSFET in A30 First Mixer Assembly.

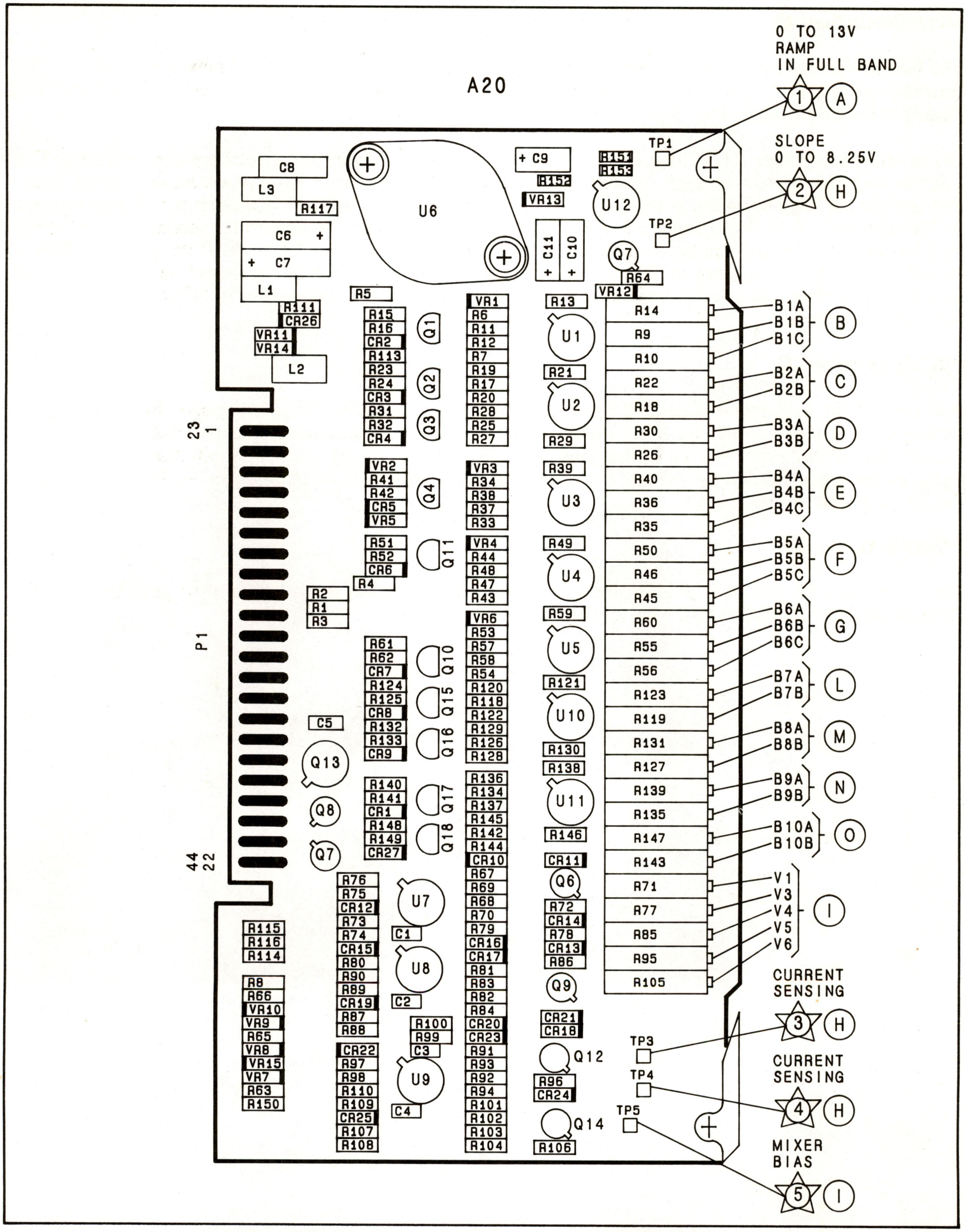

Figure 8-63. A20 Bias Assembly, Component Locations

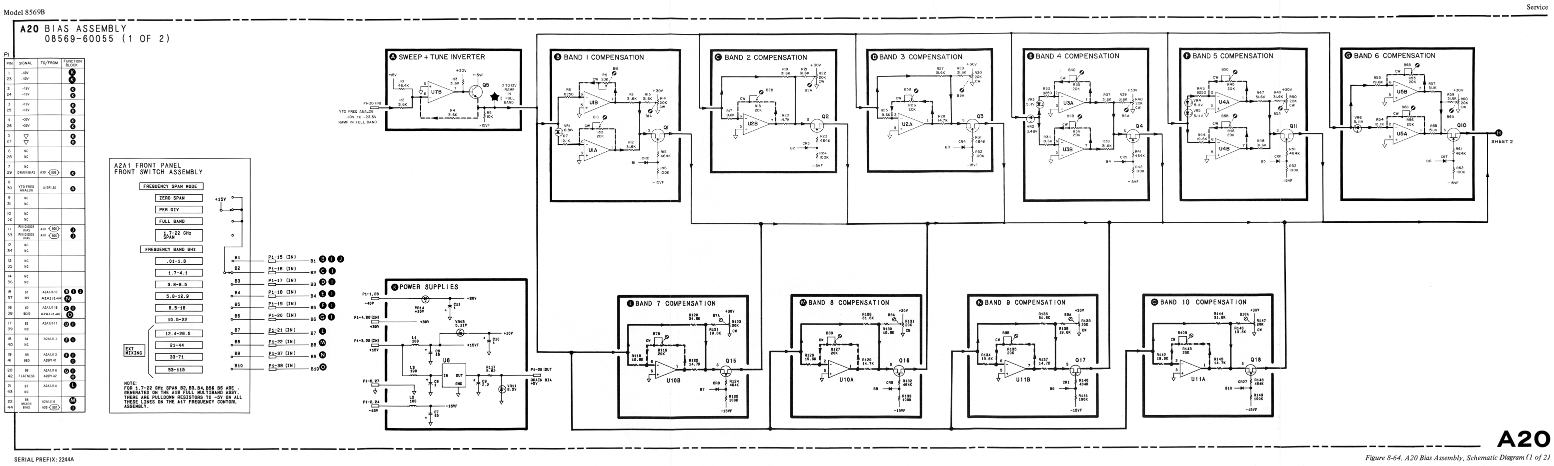

A20

Figure 8-64. A20 Bias Assembly, Schematic Diagram (1 of 2)

A20 BIAS ASSEMBLY
08569-60055 (2 OF 2)

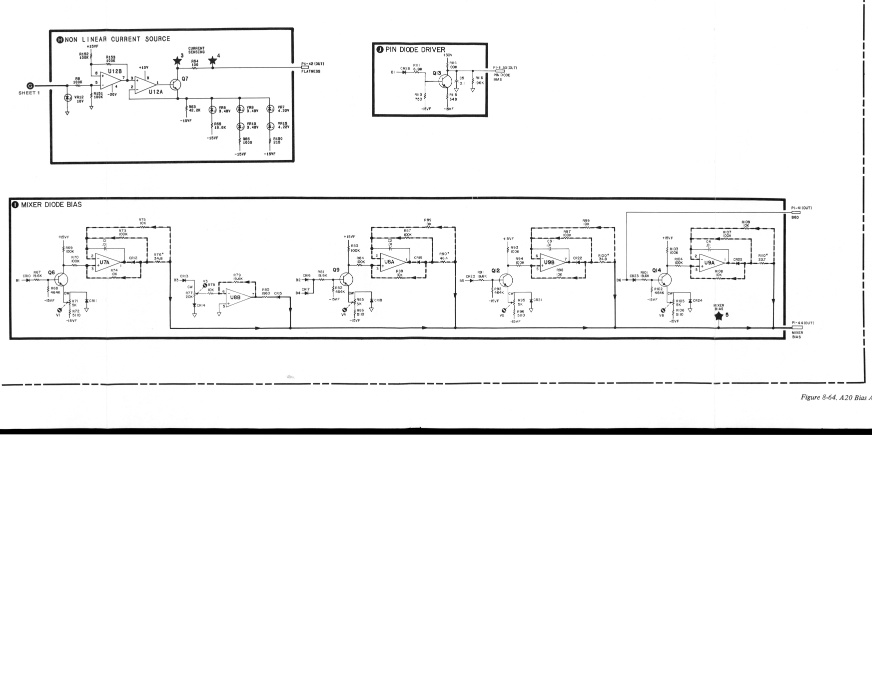

NOTES:

1. REFERENCE DESIGNATORS WITHIN THIS ASSEMBLY ARE ABBREVIATED. FOR COMPLETE REFERENCE DESIGNATOR, PREFIX WITH ASSEMBLY REFERENCE DESIGNATOR.
2. UNLESS OTHERWISE INDICATED RESISTANCE IN OHMS (Ω) CAPACITANCE IN MICROFARADS (μF) INDUCTANCE IN MICRHENRIES (μH)
3. * ASTERISK DENOTES FACTORY SELECTED COMPONENT NOMINAL VALUE SHOWN.
4. U1 THROUGH U5 AND U7 THROUGH U11 PIN 4 IS CONNECTED TO -15V AND PIN 8 TO +15V.

A20

Figure 8-64. A20 Bias Assembly, Schematic Diagram (2 of 2)

A21 VIDEO 100 Hz ASSEMBLY, CIRCUIT DESCRIPTION

NOTE

A21 Video Assembly (Option 002), HP Part Number 08565-60024, does not include the 100- and 300-Hz bandwidths.

A21 Video 100 Hz Assembly filters the detected signal from A22 Log Amplifier Assembly as selected by the VIDEO FILTER and RESOLUTION BW switches. It scales the amplitude according to the AMPLITUDE SCALE selected at the front panel. It also controls A27 Bandwidth Filter No. 1 Assembly, A23 Bandwidth Filter No. 2 Assembly, and A26 3 MHz Filter Assembly to determine selection of RESOLUTION BW, and it varies the AUTO sweep time according to VIDEO FILTER and RESOLUTION BW settings.

A21 Video 100 Hz Assembly contains the Video Filter Resistor Select, the RESOLUTION BW control circuitry (consisting of the Crystal-LC BW Select, the Crystal Bandwidth and Video Filter Capacitor Select, and the LC Bandwidth and Video Filter Capacitor Select), and the Amplitude Scale circuitry (consisting of the First Video Amplifier, the Scale Attenuator, and the Second Video Amplifier).

Video filtering is accomplished by the use of an RC filter. The amount of filtering is proportional to the resolution bandwidth; therefore, whenever the VIDEO FILTER switch or the RESOLUTION BW switch position is changed, it is necessary to change the degree of filtering. The VIDEO FILTER switch varies the resistive portion of the RC filter by switching in different resistors in the Video Filter Resistor Select circuit. The RESOLUTION BW switch selects the capacitive portion of the RC filter by switching in different capacitors in the Crystal Bandwidth and Video Filter Capacitor Select circuit and the LC Bandwidth and Video Filter Capacitor Select circuit.

When the SWEEP TIME/DIV switch is set to AUTO, the sweep time is controlled to provide the fastest possible sweep time while still maintaining amplitude calibration. Therefore, when either the VIDEO FILTER or RESOLUTION BW setting is changed, the sweep time is changed by varying the current supplied by the Auto Sweep Time Video Filter line or the Auto Sweep Time Bandwidth-Frequency Span.

The Crystal-LC Bandwidth Select circuit decodes information from the RESOLUTION BW switch and controls the BW5 line to determine whether crystal or LC filters are used in A27 and A23. LC filtering is used for the four widest bandwidths (100 kHz to 3 MHz) and crystal filtering, for the 30-kHz through 1-MHz bandwidths. The 100-Hz, 300-Hz, and 1-kHz bandwidths are filtered in A26 3 MHz Filter Assembly. In Option 002, the 1-kHz bandwidth is filtered in A27 and A23; and there is no 100 Hz or 300 Hz bandwidth filtering.

When LC filtering is used, the LC Bandwidth and Video Filter Capacitor Select circuit controls (through the BW7 line) the current for the PIN diodes in A27 and A23. When crystal filtering is used, the Crystal Bandwidth and Video Filter Capacitor Select circuit performs this function through the BW6 line.

Changes in the AMPLITUDE SCALE are accomplished by first amplifying the video signal and then attenuating it various amounts. The accuracy of absolute measurements is maximized by minimizing errors introduced in the peak signal voltage. This is accomplished by the First Video Amplifier (see Figure 8-65), which first offsets the 0V to +0.8V video signal to −0.8V to 0V and then amplifies it by a gain of 9. This amplified signal is then attenuated in the Scale Attenuator, which is controlled by the AMPLITUDE SCALE setting on the front panel. The Second Video Amplifier offsets the signal again and amplifies it by a gain of 1.11 so that +0.8V represents a full-screen deflection. The signal is then sent to A5 X-Y Amplifier Assembly to be displayed on the CRT, to A9 Data Converter Assembly for digital processing before display on the CRT, to A16 Sweep Generator Assembly to trigger the sweep in the VIDEO mode, and to the rear panel for the VERTICAL OUTPUT.

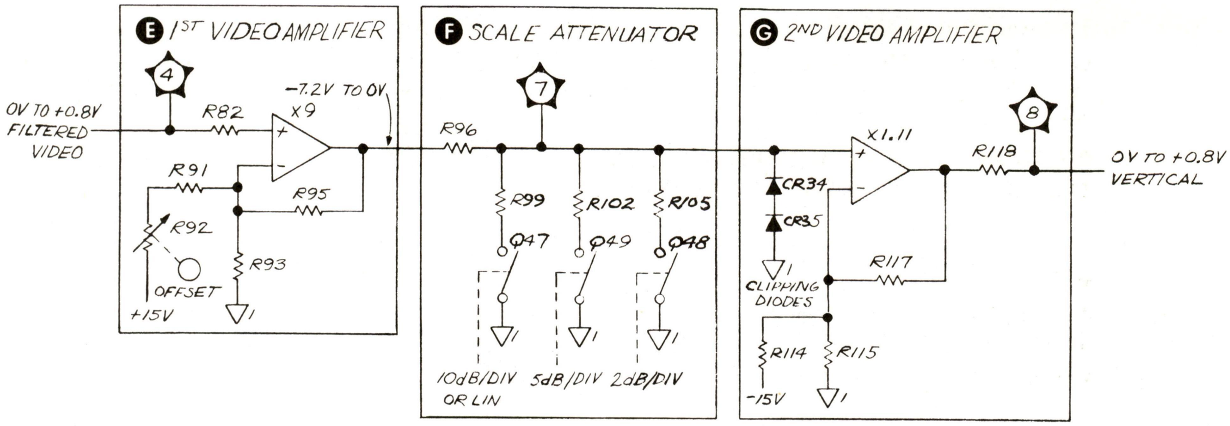

Figure 8-65. Amplitude Scale Control Circuits

Video Filter Resistor Select A

With the VIDEO FILTER switch in OFF, + 15V is routed through the switch to the bases of Q4 and Q6. These transistors turn on, turning on Q1 and grounding the AST VF (Auto Sweep Time Video Filter) line to A16 Sweep Generator Assembly. The only series resistance the signal sees is the output of A22 Log Amplifier Assembly (approximately 147Ω). In the .3 position, Q14 and Q16 are turned on, turning on Q12 to route the VIDEO signal through R11 and to place R16 in parallel with R40 on the AST VF line. The .1, .03, .01, and .003 positions operate in the same way, except that in the .003 position, only R40 is connected to the AST VF line.

The .003 position can also be activated by + 15V, routed through the FREQUENCY SPAN MODE switch when it is in the FULL BAND, or the 1.7 – 22 GHz SPAN mode. In the NOISE AVG positions, Q39 is turned on, turning on Q37 to route the signal through R35. The video bandwidth is further reduced by turning on Q26 and Q21, shunting the signal with C8. The Auto Sweep Time Bandwidth-Frequency Span line to A16 Sweep Generator Assembly, AST BW-FS, adjusts the AUTO sweep time and is shunted to ground through R81.

Crystal-LC Bandwidth Select B

Either LC or crystal filtering is selected by routing + 15V through five dc control lines (BW0 through BW4) from the front panel RESOLUTION BW switch. Each of the lines BW1 through BW4 selects one of the crystal and one of the LC bandwidths. The BW0 line determines whether crystal or LC bandwidth filtering is selected. In the LC mode, a + 15V is applied to the base of Q9, which turns on Q15 and turns off Q13, causing BW5 to reach about + 14.8V. This enables only the LC bandwidths (in A27 and A23). When BW0 is low, Q9 and Q15 are off and Q13 is on, causing BW5 to go to about – 0.5V. This enables only the crystal bandwidths.

Crystal Bandwidth and Video Filter Capacitor Select C

LC Bandwidth and Video Filter Capacitor Select D

The approximately + 10V of the AST BW-FS line is buffered by U1A and doubled by U1B (both in the LC Bandwidth and Video Filter Capacitor Select circuit). R31 provides a constant current to the AST BW-FS line.

When 3 kHz BW (BW2) is selected, two actions take place. The + 15V is routed through the RESOLUTION BW switch to the base of Q7 and Q32. These two transistors turn on, turning on Q8 and Q36 and grounding one end of C2, C6, and R72. C2 (the effect of C6 is negligible) forms the capacitive portion of the RC low-pass Video Filter. The current through R72 is applied to A16 Sweep Generator Assembly for control of the AUTO

sweep time. At the same time, BW0 is open, allowing BW5 to go low and turn off the LC section of A27 and A23. This also keeps Q38 and Q40 off, enabling the crystal bandwidths to be controlled individually. When Q7 and Q8 turn on, the PIN diode current in BW6 is set by the voltage source Q5 and R55. The 3 kHz BW ADJ, R55, adjusts the 3 kHz resolution bandwidth to allow for PIN diode tolerances. When other crystal bandwidths are selected, other transistor pairs are turned on. This changes the PIN diode current in BW6, varies the AUTO sweep current in the AST BW-FS line, and selects the capacitors used in the video filter.

In the 1 kHz (except for Option 002), 300 Hz, and 100 Hz bandwidths, +15V is applied to the BW 1 line through the front-panel RESOLUTION BW switch. This turns on Q56 and Q57, causing the BW10 line to go high, which enables the 1 kHz bandwidth. BW1 also turns on Q3, Q7 and Q8, grounding one end of C1 and C2 to form the capacitive portion of the RC low-pass filter and activating the 3 kHz bandwidth through BW6.

In the 300 Hz bandwidth, +15V is applied to BW9, turning on Q21 and shunting the signal with C8 and C18. BW9 also turns on Q59 and switches R126 in parallel with R130 to set the AUTO sweep time.

In the 100 Hz bandwidth, +15V is applied to BW8, turning on Q55 and shunting the signal with C19. BW8 also turns on Q58, placing R127 in parallel with R130 to set the AUTO sweep time.

When selecting the 300 kHz BW (BW2), +15V is applied to the BW0 line from the RESOLUTION BW switch. This drives the crystal or LC line (BW5) to about +14.8V, which partially disables the crystal section and allows use of the LC bandwidths. Q40 turns on, back-biasing CR14 and leaving the BW7 line free to control the LC bandwidths. Q30 also turns on, bringing BW6 low to turn the crystal bandwidths off and preventing Q3, Q7, Q10, and A18 from being turned on. With Q3, Q7, Q10, and Q18 off, C1, C2, C3, and C4 cannot affect the video filter. BW0 also turns Q31 on, which changes the AUTO sweep time by adding the weighting resistor R67 to the AST BW-FS line. The +15V from the RESOLUTION BW switch (BW2 line) turns on Q32 and Q36, grounding R71, R72, and C6. Q35 and R71 set the PIN diode current for the 300 kHz BW and allow adjustment for PIN diode tolerances. The current through R72 and R67 fixes the AUTO sweep time, and C6 changes the amount of video filtering. CR37, CR38, and CR39 provide temperature compensation for the Q35 current source.

The selection of other LC bandwidths, with the RESOLUTION BW switch, turns on other transistor pairs. This changes the LC PIN diode current in BW7, varies the AUTO sweep current in AST BW-FS, and selects the capacitor used in the video filter. The negative voltage from Q33 ensures that none of the transistor pairs for the narrower bandwidths turn on, thus preventing the grounding of capacitors C1, C2, C3, and C4. Capacitors C5, C6, C7, and stray capacitance in the 3 MHz BW become the video filter capacitors for the appropriate LC bandwidths. The resistors R71, R74, and R77 control the current for the proper LC bandwidth PIN diodes. In the 100 kHz resolution bandwidth (BW1), the sweep time is correct without switching in additional AUTO sweep control current, and the PIN diode current is preset in A27 and A23. The conduction of Q31 adds R67 to the AST BS-FS line to speed up the AUTO sweep time for the wider LC resolution bandwidths.

First Video Amplifier (E)

The detected and filtered video input (0V to +0.8V) is applied to the gate of Q43A. Q43, Q44, Q45, and Q46 make up a differential amplifier. The gate of Q43A is the non-inverting input and the gate of Q43B, the inverting input. The output at the emitter of Q46 is fed back to the gate of Q43B through a voltage divider consisting of R95 and the series-parallel combination of R91, R92, and R93. C16 and L3 change this voltage division at high frequencies to help increase the gain. The voltage gain of the amplifier is 9. The +15V is applied to the OFFSET adjustment R92 by −0.8V so that the peak of the output signal is 0V. This minimizes any errors that may be introduced by the Scale Attenuator in the peak signal voltage. With an input voltage range of 0V to +0.8V, the signal at the emitter of Q46 will be −7.2V to 0V. Q42 and Q41 are current sources to bias the differential amplifier, and C17 is used to introduce negative feedback at high frequencies to prevent oscillation.

Scale Attenuator F

In 10 dB/DIV or LIN, +15V is routed through the front panel AMPLITUDE SCALE switch to the base of Q47, turning on Q47 and grounding one end of R99. R99 and R96 form a resistor divider which attenuates the output of the First Video Amplifier by about 1/10. This −0.72V to 0V signal is then applied to the input of the Second Video Amplifier.

In 5 dB/DIV, Q49 turns on and grounds R102, which attenuates the video signal by about 1/5. In 2 dB/DIV, R96 and R105 attenuate the signal by approximately 1/2, and in 1 dB/DIV the signal is not attenuated at all.

Second Video Amplifier G

The Second Video Amplifier functions in the same way as the First Video Amplifier, with Q50, Q51, Q52, and Q53 making up the differential amplifier. The gate of Q50A is the non-inverting input, and the gate of Q50B is the inverting input. The output of the Scale Attenuator is clipped at about −1.2V by CR34 and CR35, and then applied to the gate of Q50A. The output of the emitter of Q53 is fed back to the gate of Q50B through the voltage divider consisting of R117 and the parallel combination of R114 and R132 and R115. The voltage gain of the amplifier is 1.11. R114 and R132 are used to offset the input voltage by +0.72V, and to compensate for the negative offset in the First Video Amplifier. With an input voltage of −0.72V to 0V, the signal at the emitter of Q53 (and at TP8) is 0V to +0.8V. Q54 is a current source to bias the differential amplifier, and C11 supplies negative feedback at high frequencies to prevent oscillation. R118, R121, R120, and R119 buffer the various outputs.

The FULL BAND frequency marker is generated by a negative voltage applied to R122 and R94 from A18 Full Multiband Assembly. This forward biases CR33, causing the vertical signal to A5 X-Y Amplifier Assembly and to A9 Data Converter Assembly to dip slightly (about −0.05V) at the tuned frequency.

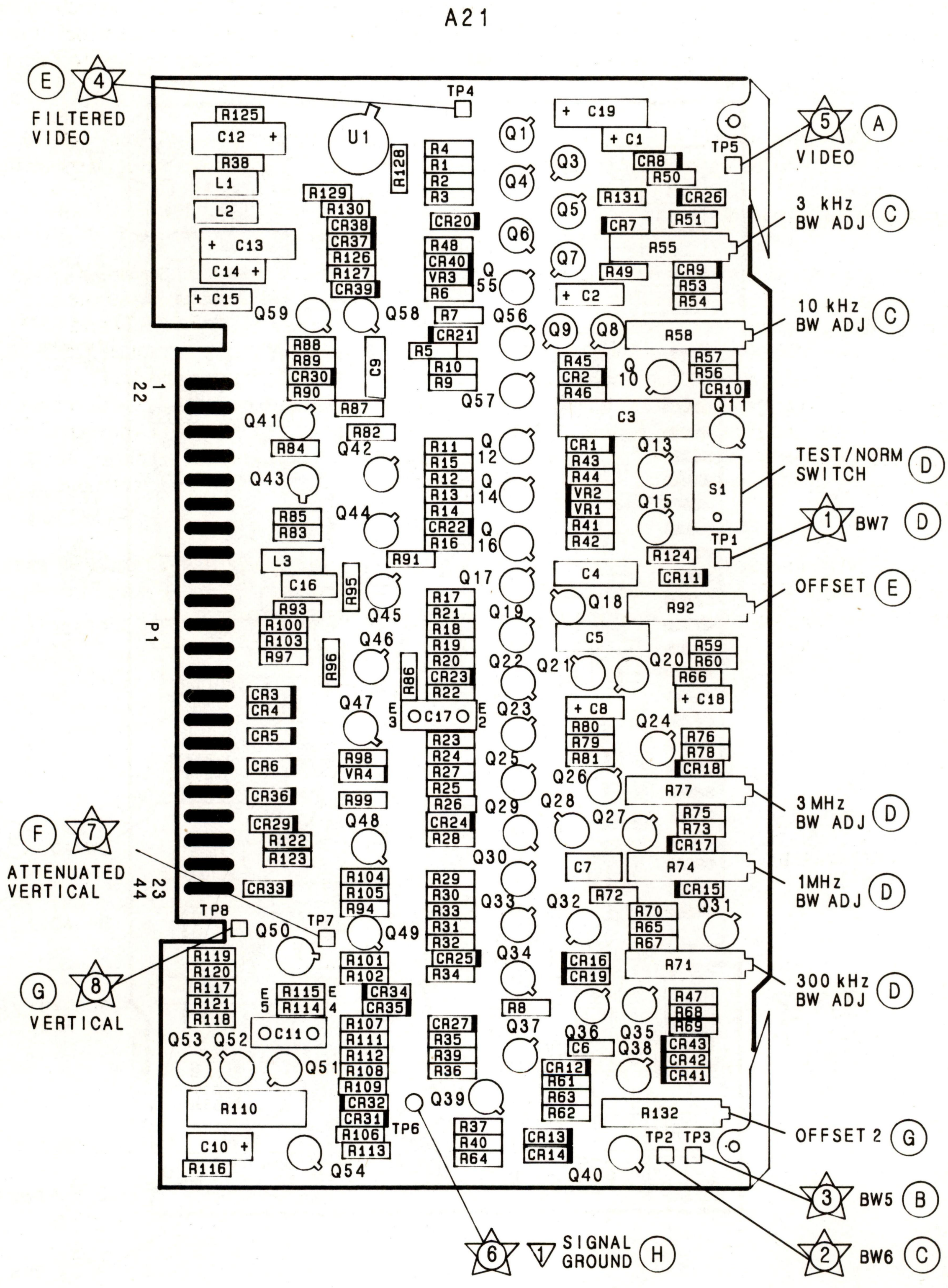

Figure 8-66. A21 Video-100 Hz Assembly, Component Locations

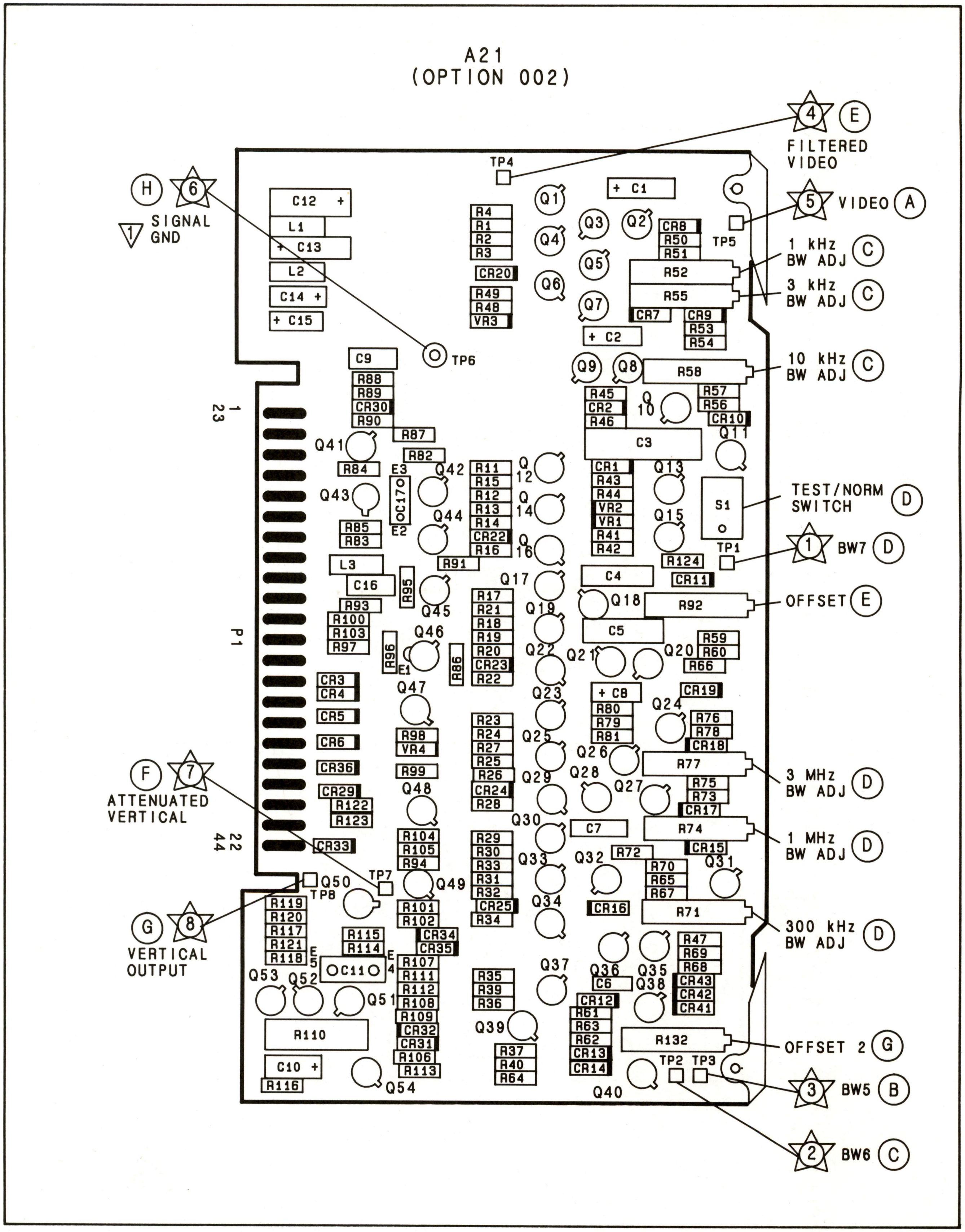

Figure 8-67. A21 Video-100 Hz Assembly (Option 002), Component Locations

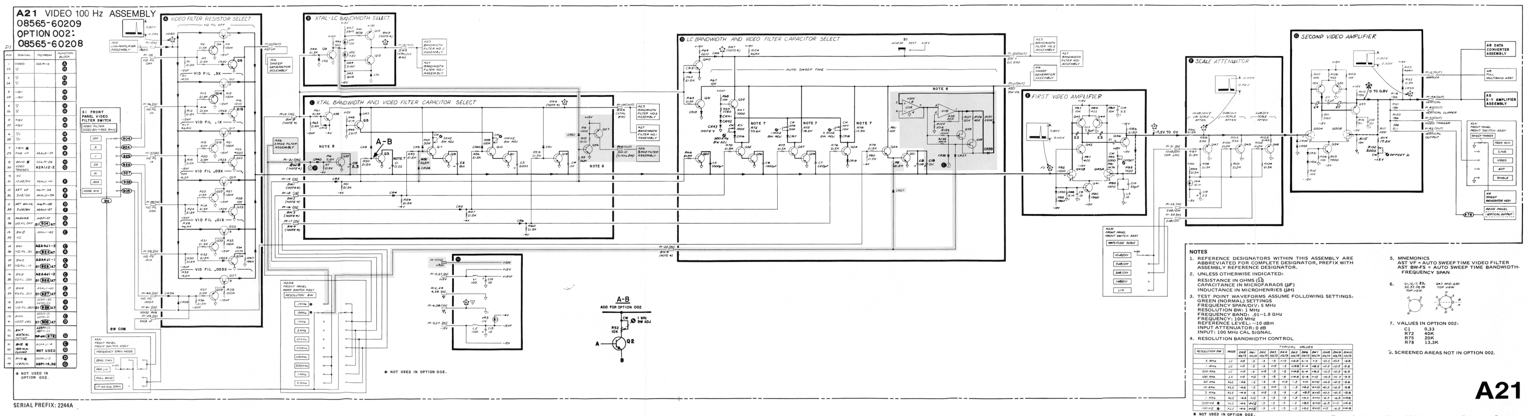

NOTES

1. REFERENCE DESIGNATORS WITHIN THIS ASSEMBLY ARE ABBREVIATED FOR COMPLETE DESIGNATOR, PREFIX WITH ASSEMBLY REFERENCE DESIGNATOR.
2. UNLESS OTHERWISE INDICATED:
   RESISTANCE IN OHMS (Ω)
   CAPACITANCE IN MICROFARADS (μF)
   INDUCTANCE IN MICROHENRIES (μH)
3. TEST POINT WAVEFORMS ASSUME FOLLOWING SETTINGS:
   GREEN (NORMAL) SETTINGS
   FREQUENCY SPAN/DIV: 5 MHz
   RESOLUTION BW: 1 MHz
   FREQUENCY BAND: .01—1.8 GHz
   FREQUENCY: 100 MHz
   REFERENCE LEVEL: —10 dBm
   INPUT ATTENUATOR: 0 dB
   INPUT: 100 MHz CAL SIGNAL
4. RESOLUTION BANDWIDTH CONTROL

RESOLUTION BW	MODE	TYPICAL VALUES										
		BW∅ VOLTS	BW1 VOLTS	BW2 VOLTS	BW3 VOLTS	BW4 VOLTS	BW5 VOLTS	BW6 VOLTS	BW7 VOLTS	BW8 VOLTS	BW9 VOLTS	BW10 VOLTS
3 MHz	LC	+15	-3	-3	-3	+15	+14.8	≤-4	+5	-10.5	-10.5	-9.8
1 MHz	LC	+15	-3	-3	+15	-3	+14.8	≤-4	+8.5	-10.5	-10.5	-9.8
300 KHz	LC	+15	-3	+15	-3	-3	+14.8	≤-4	+9.5	-10.5	-10.5	-9.8
100 KHz	LC	+15	+15	-3	-3	-3	+14.8	≤-4	+10	-10.5	-10.5	-9.8
30 KHz	XLC	-4.6	-3	-3	-3	+15	-.5	+10	≥+10	-10.5	-10.5	-9.8
10 KHz	XLC	-4.6	-3	-3	+15	-3	-.5	+9.5	≥+10	-10.5	-10.5	-9.8
3 KHz	XLC	-4.6	-3	+15	-3	-3	-.5	+8.5	≥+10	-10.5	-10.5	-9.8
1 KHz	XLC	-4.6	+15	-3	-3	-3	-.5	+8.5	≥+10	-6.5	-6.5	+14.8
300 HZ ✱	XLC	-4.6	+15	-3	-3	-3	-.5	+8.5	≥+10	-6.5	+15	+14.8
100 HZ ✱	XLC	-4.6	+15	-3	-3	-3	-.5	+8.5	≥+10	+15	-6.5	+14.8

✱ NOT USED IN OPTION 002.

5. MNEMONICS
   AST VF = AUTO SWEEP TIME VIDEO FILTER
   AST BW-FS = AUTO SWEEP TIME BANDWIDTH-FREQUENCY SPAN
6. Q1,12,17, 23, 30, 37, 58, 59 TOP VIEW; Q43 AND Q50 TOP VIEW
7. VALUES IN OPTION 002:
   C1 0.33
   R72 40K
   R75 20K
   R78 13.3K
8. SCREENED AREAS NOT IN OPTION 002.

A21

Figure 8-68. A21 Video 100 Hz Assembly, Schematic Diagram

A22 LOG AMPLIFIER ASSEMBLY, CIRCUIT DESCRIPTION

A22 Log Amplifier provides the ability to display signals in either a linear mode or 70 dB log mode. It also operates with the Step Gain Amplifier Assembly to provide the last 40 dB of step gain amplification of the 21.4 MHz IF signal.

The Log Amplifier Assembly has seven amplifier stages, with each stage capable of providing both linear and logarithmic amplification. Following the amplifier stages, the amplifier IF signal is detected to produce the vertical signal for the display. An offset circuit, following the detector, is used in the log mode to offset the vertical output in steps equivalent to 40 dB of IF gain.

Amplifier Stages (1st through 7th) A C D E F G H

The seven amplifier stages are similar in operation. They vary in their use as linear or log amplifiers, depending on the setting of the AMPLITUDE SCALE switch on the front panel.

Log Mode of Operation

The seven amplifier stages limit the gain in sequence to provide 70 dB of log amplification. Each stage consists of an emitter follower used as a voltage source to drive a common-base amplifier whose gain decreases with increasing signal level.

Log Amplifier Gain. The operation of the second stage is described. In the log mode of operation, Q42 (Gain Control Lines circuit) is on, forward biasing the log diodes CR10 and CR11, which are Schottky diodes with a forward bias voltage of approximately 0.4V. The gain of the amplifier is set by the ratio of R52 to the total resistance R_T between the emitters of Q13 and Q8. An example of gain computation is shown in Figure 8-69. RT is at a minimum (approximately 150 ohms) for small signals when the ac signal current in the log diodes CR10 and CR11 is small compared to their dc bias current. As the ac signal level is increased, the ac signal current increases to the level of the dc bias current and R_T increases because of current limiting in the diodes.

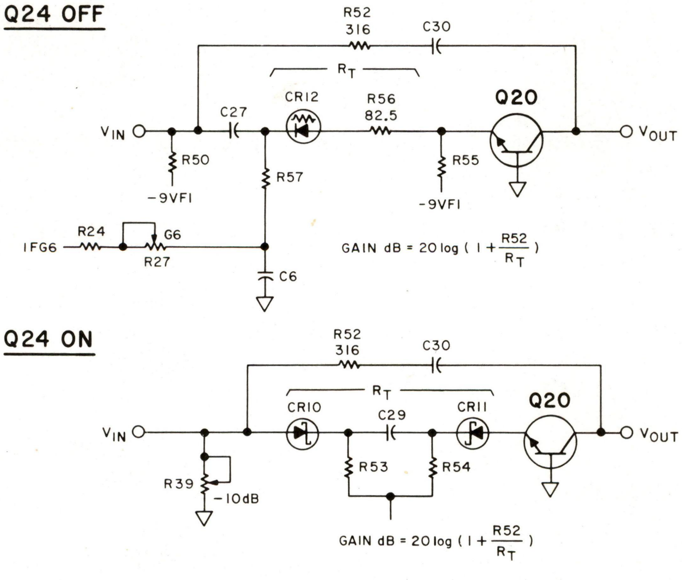

Figure 8-69. Simplified Log Amplifier Stage

The initial gain of the stage (approximately 10 dB) is set by the dc bias current through the log diodes CR10 and CR11. The bias current is controlled by the temperature variable −8VT supply at the emitter of Q24. With Q24 off, the final gain of the stage (0 dB) is set by the circuit configuration (R_T becomes very large) and can be set further by the adjustment of R39 −10 dB.

Linear Mode of Operation

Linear Gain. In the linear mode, the limiting action of the log diodes is removed from each of the seven amplifier stages. Q24 is turned off, and the dc bias current through the log diodes CR10 and CR11 is zero. In the sixth and seventh stages, an alternate signal path is used to set the gain at about 5 dB per stage. The purpose of this fixed gain is to scale properly between the LOG and LIN modes. These stages are activated by the −8VT from the AMPLITUDE SCALE switch through R34 LIN, R93, and R101, and finally through the cathodes of CR25 and CR28. The combined gain of the two stages is adjusted with R34 LIN, which controls the dc bias current in the PIN diodes.

Linear Step Gain. In stages 2, 3, 4, and 5, an alternate signal path is used to provide 10 dB of gain per stage. This gain is used as switched gain in the LIN mode. This 40 dB of gain is switched as follows: With INPUT ATTEN at 0 dB and REF LEVEL dBm at −60, the −8VT is routed to the IF gain control line IFG4 to forward bias CR22 in the fifth stage. The gain of this stage is adjusted using R33 G4 as bias current control for CR22. Amplifier stage 4 is activated by control line IFG5, and its gain is adjusted with R30 G5. Amplifier stages 2 and 3 are both activated by control line IFG6, providing a total of 20 dB of gain which can be set further by R27 G6.

Gain Control Lines (B)

The +15V (in LOG mode) or −8VT (in LIN mode) is routed through the front panel REFERENCE LEVEL switch to a combination of IFG4, IFG5, and IFG6 corresponding to the REFERENCE LEVEL selected. In LOG mode, the IF gain lines are activated by +15V, which is routed to the Log Offset circuit through R24, R25, and R26. In LIN mode, the IF gain lines are activated by −8VT. Current flows through R27, R30, and R33 to stages 2, 3, 4, and 5. When LOG/LIN is at +15V, Q24 is saturated and the collector goes to −8VT, which turns on the log diodes. When the LOG/LIN line is at −8VT, Q14 is turned off and current flows through R34 to stages 6 and 7.

Log Mode Temperature Controlled Variable Gain Amplifier (J)

LOG/LIN Relationship. In LIN mode, when approximately 700 mV rms (+10 dBm) is applied to the input of the log amplifier, the voltage at the output of stage 7 (TP5) is about 1.5 Vrms. With the same input signal in LOG mode, the output at TP5 is about 2.0 Vrms. To maintain equal relationship with maximum input signal (trace at the top of the display), the output in LOG mode must be attenuated. This attenuation is achieved through the use of variable gain amplifier Q7, whose gain is determined by the ratio of its collector load to its emitter load.

Variable Gain Amplifier. In LIN mode, the LOG/LIN control line is at −8VT. This forward biases CR4 and causes the output of U2B (TP1) to go to approximately +15V. CR29 is reverse biased, and the gain of the variable gain amplifier is R104/R105 (100/316), or approximately 0.3. In LOG mode, the LOG/LIN control line is at +15V, which reverse biases CR4. The output of U2B is now approximately +0.45V. CR29 is forward biased and has an ac resistance of about 100 ohms, which is in parallel with the 100-ohm R104, so the collector load of Q7 is 50 ohms. The gain is 50/316, or 0.15. This gain depends upon the resistance of CR29, which is set by SLOPE adjustment R23.

Detector (K) and Buffer Amplifier (L)

The signal output of Q7 is applied to the base of Q6, which converts voltage variations into current variations. Q5 is the current driver for the detector. Q4, a half-wave rectifier, is biased just below cutoff by CR1. When the input signal is positive, Q4 is in conduction but is cut off during the negative transition. The detector output is routed to a low-pass filter and a X2 buffer amplifier, Q21 and Q22, to provide the video output.

Log Offset (M)

The last 40 dB of log step gain is produced in this circuit. When this gain is used, there is already a full 50 dB of gain in the Step Gain Amplifier Assembly, so the noise of the analyzer is amplified up to the log range of the Log Amplifier Assembly. This makes further amplification unnecessary since any signal below the log range of the Log Amplifier Assembly would be buried in the noise. The output of the detector can then be offset in 100-mV steps corresponding to 10 dB of IF amplification. This offset is provided by Q23 operating as a stepped current source into R115. With the AMPLITUDE SCALE switch in one of the LOG/DIV positions, +15V is routed through the closed contacts of the REF LEVEL dBm switch to the IF gain control lines IFG4, IFG5, and IFG6. With an IF gain control line connected to +15V, a log-shift diode (CR31, CR32, or CR33) is forward biased, and this bias current, determined by R123, R124, or R125, flows into the emitter of current source Q23. IFG4 and IFG5 each provides 10 dB (100 mV) of log offset gain and IFG6 provides 20 dB (200 mV). The LOG GAIN adjustment, R121, sets the operating point of Q23 for 100-mV steps.

Temperature Compensation Power Supply (I)

Temperature compensation is provided for the −8VT and +1V regulators. CR2 and CR3 operate as the temperature-sensing element. Temperature variations cause diode voltage changes that are amplified by U1A for the −8VT supply and by U2B for the +1V supply. The −8VT supply provides bias current for the Schottky diodes in the LOG mode. In the LIN mode, the −8VT supply provides bias current for CR12, CR15, CR19, CR22, and CR28. The +1V supply provides bias current for CR29.

+11V Regulated Power Supply (N)

A precise 5.4V reference voltage, VR1, is provided for the +11V Regulator. This reference voltage is applied to the positive input of U1B. R5 and R6 set the gain of U1B to 2.1. The output at TP2 is 2.1 X 5.4, or 11.3V. Q1 acts as an emitter follower and provides the current drive for the +11V supply.

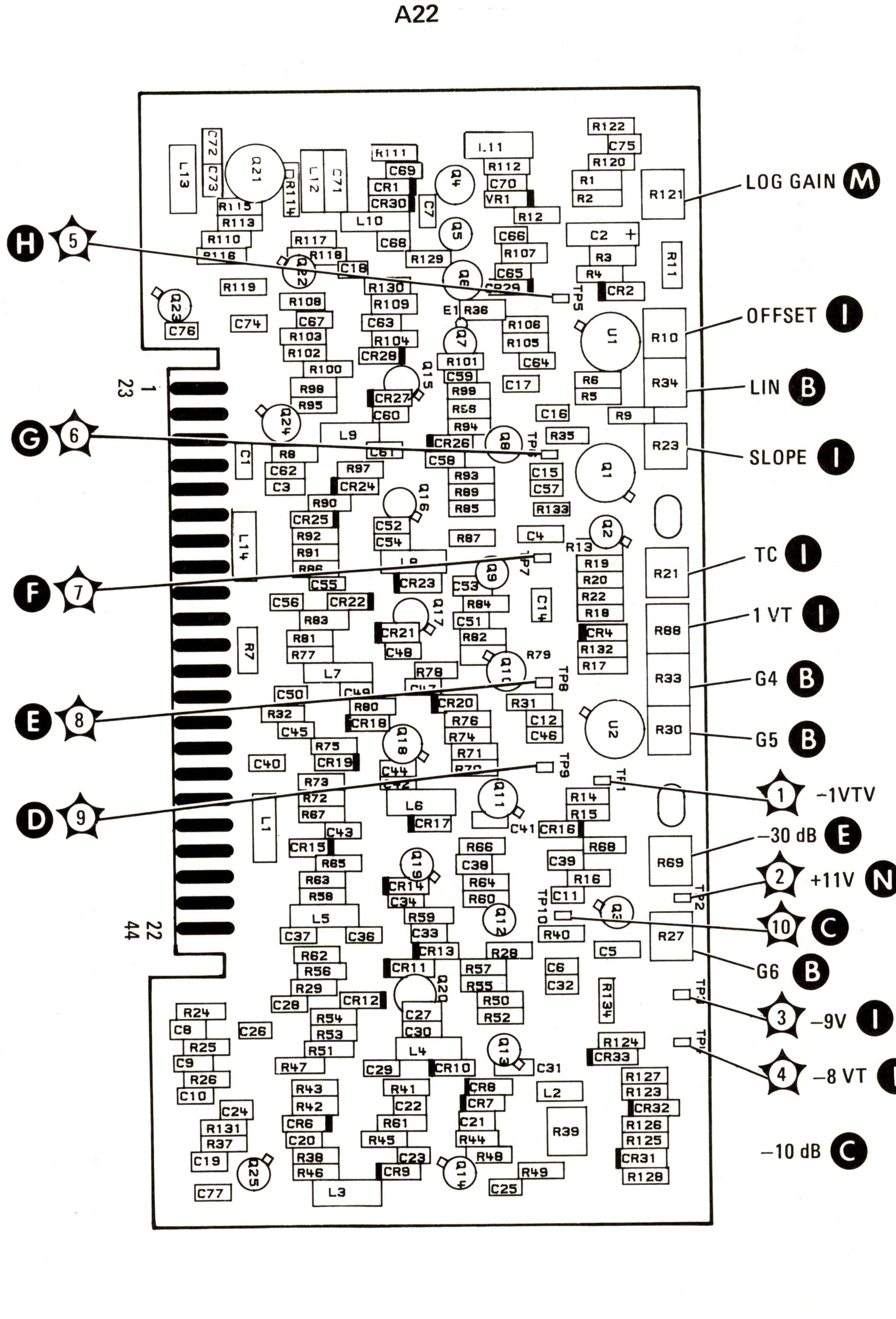

Figure 8-70. A22 Log Amplifier Assembly, Component Locations

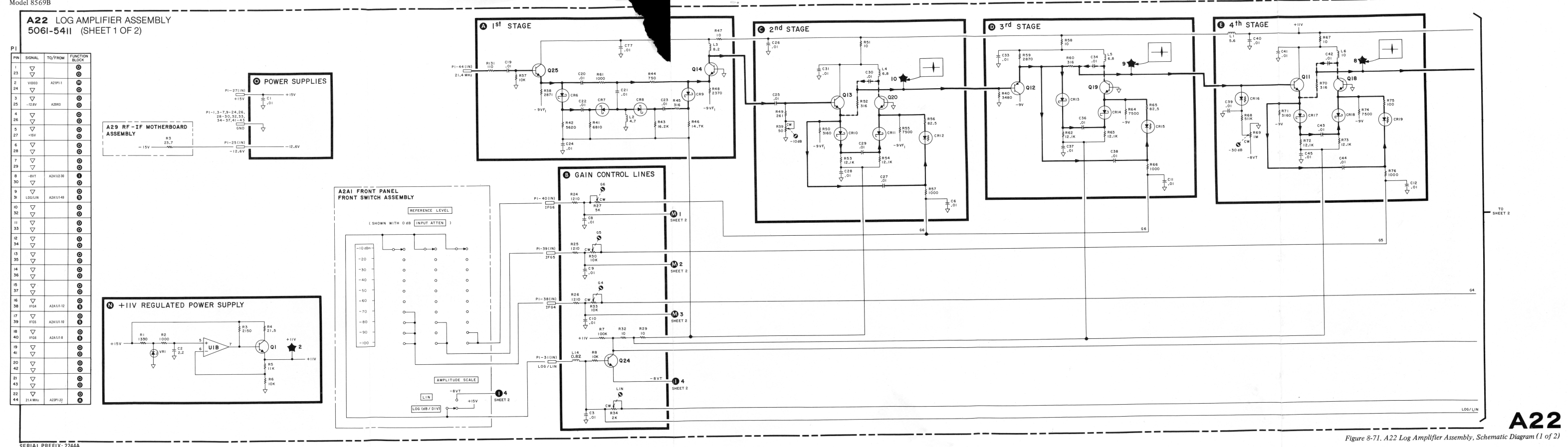

SERIAL PREFIX: 2244A

Figure 8-71. A22 Log Amplifier Assembly, Schematic Diagram (1 of 2)

A22 LOG AMPLIFIER ASSEMBLY
5061-5411 (SHEET 2 OF 2)

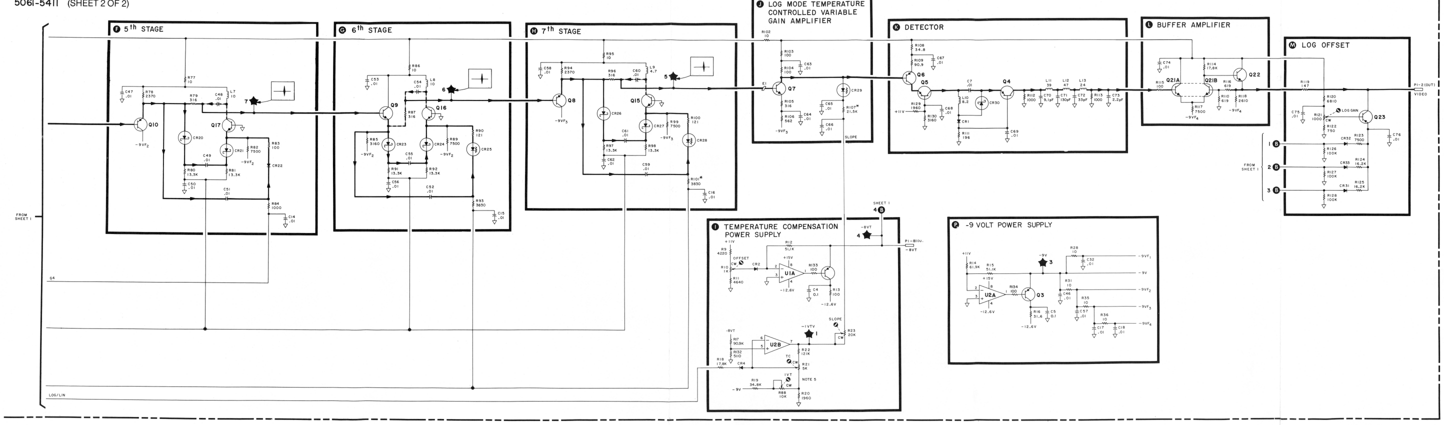

NOTES:

1. REFERENCE DESIGNATORS WITHIN THIS ASSEMBLY ARE ABBREVIATED. FOR COMPLETE DESIGNATOR, PREFIX WITH ASSEMBLY REFERENCE DESIGNATOR.

2. UNLESS OTHERWISE INDICATED:
   RESISTANCE IN OHMS (Ω)
   CAPACITANCE IN MICROFARADS (μF)
   INDUCTANCE IN MICROHENRIES (μH)

3. * ASTERISK DENOTES FACTORY SELECTED COMPONENT. NOMINAL VALUE SHOWN.

4. SIGNAL LEVELS AND TEST POINT WAVEFORM ASSUME THE FOLLOWING SETTINGS:
   GREEN (NORMAL) SETTINGS
   FREQUENCY SPAN/DIV: 5 MHz
   RESOLUTION BW: 1 MHz
   FREQUENCY BAND: .01–1.8 GHz
   INPUT ATTEN: 0 dB
   REF LEVEL: –10 dBm
   100 MHz –10 dBm (CAL OUTPUT) SIGNAL INTO INPUT
   ANALYZER TUNED TO SIGNAL

5. R21 TC AND R88 1VT FACTORY ADJUSTABLE ONLY.

6. MNEMONIC TABLE:

MNEMONIC	DISCRIPTION
IFG4 IFG5 IFG6	IF GAIN CONTROL LINES
LOG/LIN	SELECTS EITHER LOG OR LINEAR
+11V	+11 VOLTS
–8VT	–8 VOLTS TEMPERATURE COMPENSATED
–9V $-9VF_1$ $-9VF_2$ $-9VF_3$	–9 VOLTS

A22

Figure 8-71. A22 Log Amplifier Assembly, Schematic Diagram (2 of 2)

A23/A27 BANDWIDTH FILTER ASSEMBLIES, CIRCUIT DESCRIPTION

A23 Bandwidth Filter No. 2 Assembly and A27 Bandwidth Filter No. 1 Assembly are identical boards; however, off-board connections are not identical. A27 is described.

A27 Bandwidth Filter No. 1 Assembly operates at 21.4 MHz and is variable in bandwidth from 3 MHz to 3 kHz (3 MHz to 1 kHz for Option 002). The front-panel RESOLUTION BW switch is used to select one of ten (eight for Option 002) available bandwidth settings (3 MHz, 1 MHz, 300 kHz, 100 kHz, 30 kHz, 10 kHz, 3 kHz, and 1 kHz, .3 kHz and .1 kHz). The two most narrow bandwidths are not included in Option 002.

The narrower bandwidths (3 kHz through 30 kHz) are obtained from four synchronously tuned crystal filters; the four wider bandwidths (100 kHz through 3 MHz), from four synchronously tuned LC tank circuits. The 100 Hz, 300 Hz, and 1 kHz bandwidths are obtained by five synchronously tuned crystal filters centered at 3 MHz. Assemblies A23 and A27 are switched to the 3 kHz BW when 1 kHz, .3 kHz, or .1 kHz RESOLUTION BW is selected. The actual bandwidth filtering for these three settings is done on A26 3 MHz Filter Assembly. In Option 002 instruments, all bandwidth filtering is done in A23 and A27. The four stages of bandwidth filters are on two identical printed-circuit boards, Bandwidth Filter No. 1 Assembly (A27) and Bandwidth Filter No. 2 Assembly (A23). (Two LC tank circuits and two crystal filters are on each board.) The four crystals in the two bandwidth assemblies (A23Y1, A23Y2, A27Y1, A27Y2) and the crystal in A26 3 MHz Filter Assembly are a factory-selected matched set. If replacement of a bandwidth filter assembly is necessary, the new board is shipped with two crystals installed and the other three crystals (which must be used to replace the existing two crystals in the good bandwidth filter assembly and the one crystal in A26) are packaged separately. The separate package of three crystals (or two for Option 002) is included with the new bandwidth filter board. In addition to the filter stages, each Bandwidth Filter Assembly provides 10 dB of gain in both LC and crystal filter operation. (There is some gain in the unity gain buffer amplifiers.)

10 dB Input Buffer Amplifier (B)

The 10 dB Input Buffer Amplifier functions as a non-inverting op amp.

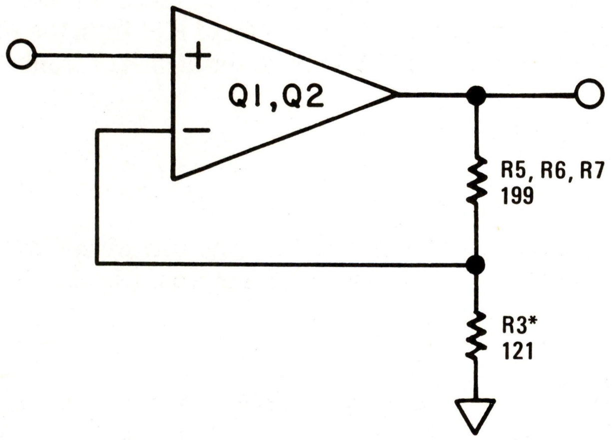

$$G = 1 + \frac{R5 + R6 + R7}{R3}$$

$$= 1 + \frac{199}{110}$$

$$= 2.81$$

$$G_{dB} = 20 \log G$$

$$= \sim 9$$

In the crystal mode (bandwidths =<30 kHz), the amplifier includes Q3. The biasing of the amplifier is independent of its ac (21.4 MHz) operation, but is very critical for its proper functioning. If a malfunction occurs, the dc bias should be checked first.

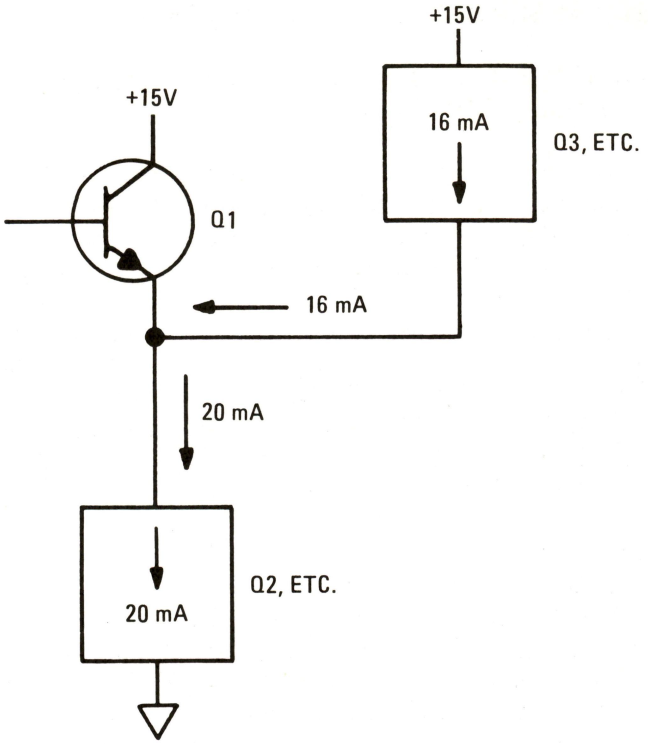

The current through Q1 is determined by the difference between two current sources, one involving Q3 and the other involving Q2. The most convenient way to find the current from each source is to measure the voltage across each emitter resistor. (A 1 kΩ resistor should be used in series with the voltmeter probe tip to prevent the circuit from oscillating and giving an erroneous reading.) For Q3 and Q6, the current through R58 and R60 must be included. If results are inconsistent, the emitter resistor should be checked also. Check to see that the BW5 line is at the voltage specified ($\sim \pm 0.3V$) in the table on the schematic.

In the LC mode (the four wider bandwidths), the BW5 line goes to 14.8V and turns off current source Q3. The current supplied by Q3 in the crystal mode is now supplied through CR1 and R13 from the BW5 line. In the LC mode, the current through Q1 can be found by subtracting the current through R13 from the current through R8.

Unity Gain Buffer Amplifier F

The Unity Gain Buffer Amplifier is the same as the 10 dB Input Buffer Amplifier except that it has a FET input (Q5) and is connected for unity gain. The input is selected by the BW5 line from CR9 in the LC mode, or from CR8 in the crystal mode.

In the crystal mode, the current through Q5 is determined by the difference between the current sourced by Q6 and that sunk by Q7, or about 4 mA. A significant deviation from this current should be reflected by the gate-to-gate source voltage of Q5. The source should be at least 0.2V more positive than the gate, but not more than 1.5V more positive. If the difference is less than 0.2V, the FET current is too high; if the difference is greater than 1.5V, the FET current is too low. In either case the FET could also be defective. To determine precisely the current through Q5, the difference between the current through R38 and that through R60 should be subtracted from the current through R30. If the results are inconsistent, check the above-mentioned resistors.

In the LC mode of operation, current is supplied through R37 and CR19 from the BW5 line instead of through Q6. The difference between the current through R37 and that through R30 yields the FET current.

Output Buffer Assembly ❶

The output Buffer Amplifier is a complementary pair of transistors in which Q9 acts as a source follower boosted by Q10. The current through FET Q9 is set by R53:

$$I_{FET} = \frac{V_{be}\,(Q10)}{196\Omega} = \sim \frac{.7}{196\Omega} = \sim 3\text{ mA}$$

The total current through Q9 and Q10 is set by R54. The input is selected by the BW5 line from either CR16 in the LC mode or CR15 in the crystal mode.

Crystal Filtering Circuits Ⓔ Ⓗ

The bandwidths 1 kHz (Option 002 only), 3 kHz, 10 kHz, and 30 kHz are obtained by crystal filtering. The crystals are used in series resonant mode and can be modeled as a series resonant circuit with a parallel capacitance:

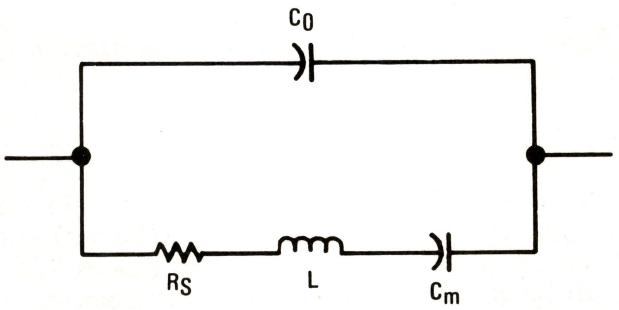

The parallel capacitance (C_o) and series resistance R($_s$) are not desired and are compensated for in the circuit, resulting in this simplified schematic of a single pole of crystal filtering:

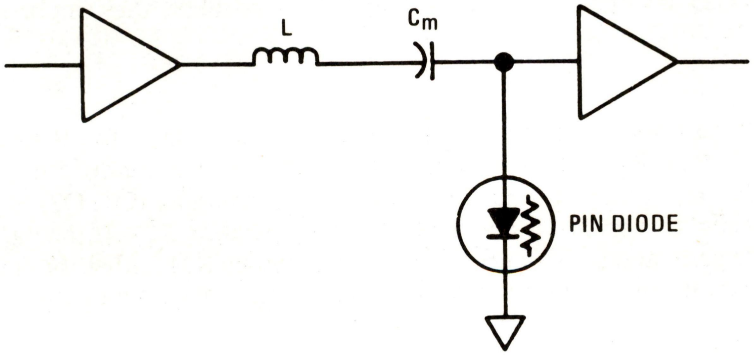

The PIN diode CR4 functions as a variable resistor at 21.4 MHz. As the resistance is lowered by increasing the current in the BW6 line, the bandshape becomes narrower. The bandwidth of one pole widens to approximately 70 kHz when the PIN diode is turned off completely at the 30 kHz BW setting. (For a four-pole filter, the bandwidth of each pole is about 2.3 times the bandwidth of all four poles taken together. The bandwidth of two poles is about 1.5 times the bandwidth of all four poles taken together.)

A simplified schematic of a crystal pole, including compensation for R_s and C_o in the crystal and input capacitance of the buffer amplifier, is shown in Figure 8-72.

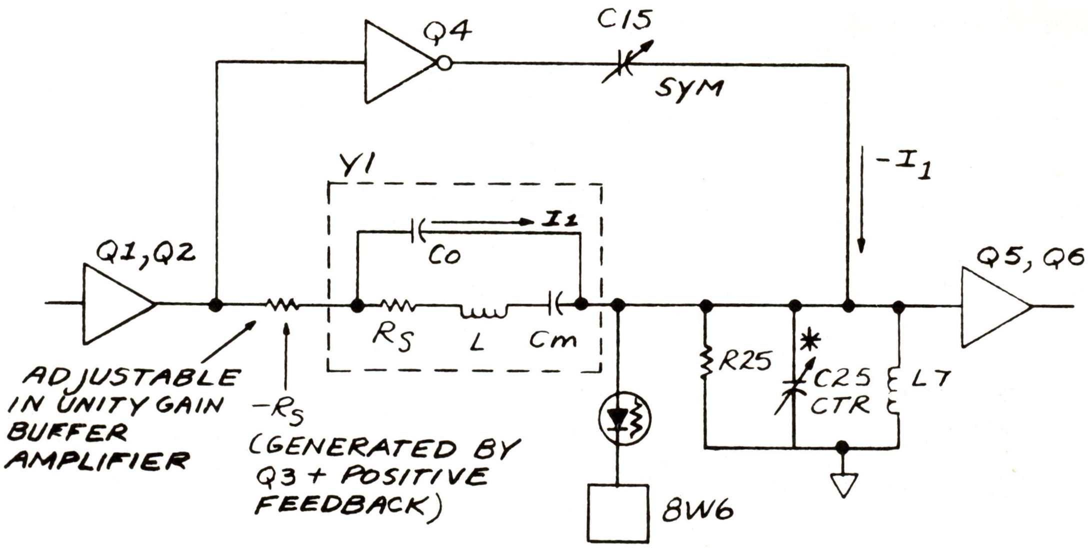

Figure 8-72. Crystal Pole, Simplified Schematic

The SYM adjustment C15 compensates for C_O by producing a current ($-I_1$) that is equal to the current (I_1) through C_O of the crystal but of opposite phase. These currents cancel the effect of C_O. The positive feedback from the collector of Q3 generates a negative output resistance that cancels R_S of the crystal. This is approximated by resistor R6 in the 10 dB Input Buffer Amplifier and potentiometer R31 in the Unity Gain Buffer Amplifier.

The input capacitance of the buffer amplifier, printed circuit board capacitance, PIN diode capacitance, and the centering (CTR) capacitor C25 are in parallel resonance with L7. These components have negligible effect on the band shape and as long as C25 has sufficient range to "dip" the bandshape, they can be ignored in analyzing the remainder of the circuit.

The PIN diode CR4 controls bandwidths from 3 kHz (1 kHz in Option 002) to 10 kHz. For the 30 kHz bandwidth, CR3 is back biased, and R23 sets that bandwidth. If the 30 kHz bandwidth is much too narrow, even with CR4 back biased, the circuit may be loaded by a bad buffer amplifier (Q5, Q7) or inverting amplifier (Q4). If the bandwidth is only slightly narrow, it may be widened by padding R23. If the narrowest bandwidths (1 kHz or 3 kHz) have too little gain, and it cannot be increased enough by R31, either the crystals have too high a series resistance (defective crystal); or the output resistance is not negative enough (defective buffer amplifier or Q3).

Almost any defect in the filter boards (A23 and A27) will result in a faulty dc bias condition in one of the three buffer amplifiers on each board. The dc bias of each stage is now less straightforward than ac (21.4 MHz) operation and should be checked carefully.

LC Filtering Circuits Ⓓ Ⓖ

The two LC filtering circuits are used for the wider bandwidths (100 kHz through 3 MHz). They are similar in function; the First LC Pole circuit is described. A schematic of the simplified equivalent circuit is shown below:

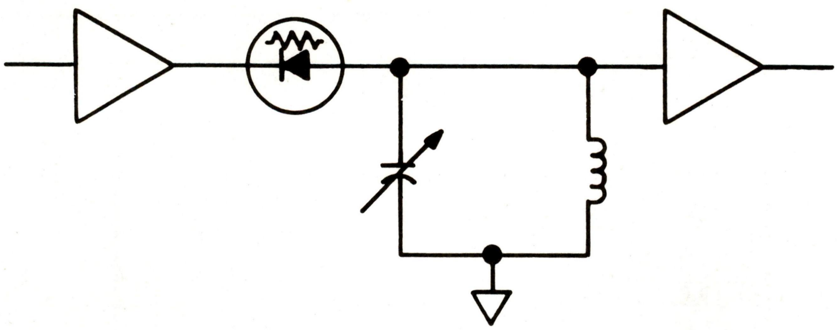

The LC filter utilizes a metalized inductor L6 in parallel with four capacitors: C23 (LC CTR) for centering, C21 for temperature compensation, and the series combination of C16* and C20*. The parallel circuit is driven through PIN diode CR3, which functions as a variable resistor. The BW7 line sets the current through CR3. Higher resistance results in narrower bandwidth. A simplified schematic of the First LC Pole circuit is shown in Figure 8-73.

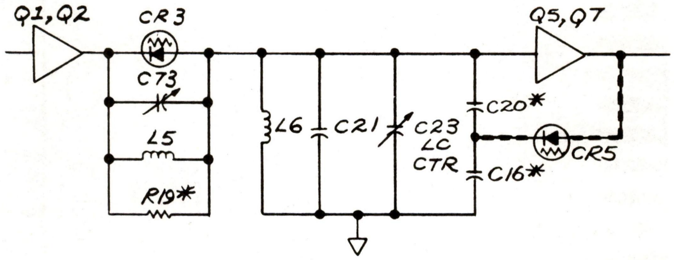

Figure 8-73. First LC Pole, Simplified Schematic

C73 and L5 tune out the capacitance of CR3. R19* sets the 100 kHz bandwidth when CR3 is back biased (i.e., highest resistance). CR5 is controlled by the LC FEEDBACK potentiometer R26 and compensates for losses in the parallel resonant circuit. (In the Second LC Pole circuit, fixed resistor R56* replaces CR5.)

Low gain in one of the poles in the 100 kHz bandwidth is caused by:

1. The pole being centered at some frequency other than 21.4 MHz (a defective metalized inductor is most common).

2. The Q of the pole being too low (not a common failure).

3. Insufficient feedback from the buffer amplifier.

4. Defective buffer amplifier that is loading the circuit.

If the 100 kHz bandwidth amplitude is all right, but that of the 300 kHz bandwidth is too low, either C73 or C74 might not be properly adjusted. If the 300 kHz amplitude is too high, the four LC poles have not been tuned closely enough to the same frequency. In either case, refer to Section V, Adjustments.

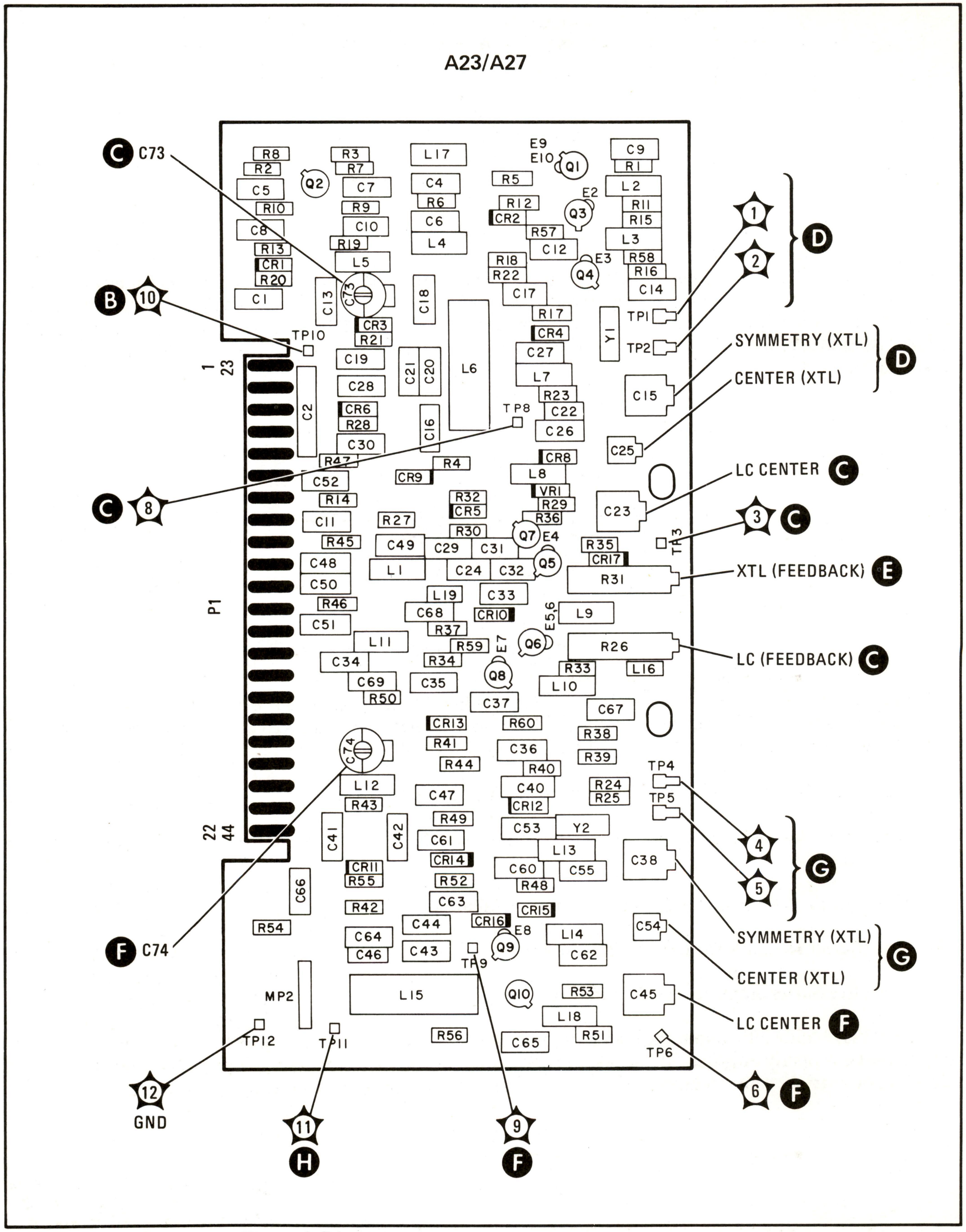

Figure 8-74. A23 Bandwidth Filter No. 2 Assembly and A27 Bandwidth Filter No. 1 Assembly, Component Locations

A23 BANDWIDTH FILTER NO. 2 ASSEMBLY AND A27 BANDWIDTH FILTER NO. 1 ASSEMBLY 08565-60174

A23P1

PIN **	SIGNAL	TO/FROM	FUNCTION BLOCK
22	21.4 MHz IF	A22P1-44	H
23	21.4 MHz IF	A24P1-1	B
24	NC		
25	NC		
26	NC		
27	+15V		I
28	NC		
29	+10 VTV	A16P2-12	I
30	BW5	A21P1-18	A
31	BW6	A21P1-19	A
32	BW7	A21P1-20	A
33	NC		
34	NC		
35	NC		
36	NC		
37	NC		
38	NC		
39	NC		
40	NC		
41	NC		
42	NC		
43	NC		
44	NC		

A27P1

PIN **	SIGNAL	TO/FROM	FUNCTION BLOCK
22	21.4 MHz IF	A25P1-44	H
23	21.4 MHz IF	A28P1-23	B
24	NC		
25	NC		
26	NC		
27	+15V		I
28	NC		
29	+10 VTV	A16P2-12	I
30	BW5	A21P1-18	A
31	BW6	A21P1-19	A
32	BW7	A21P1-20	A
33	NC		
34	NC		
35	NC		
36	NC		
37	NC		
38	NC		
39	NC		
40	NC		
41	NC		
42	NC		
43	NC		
44	NC		

**PIN 1 THRU 21 GND

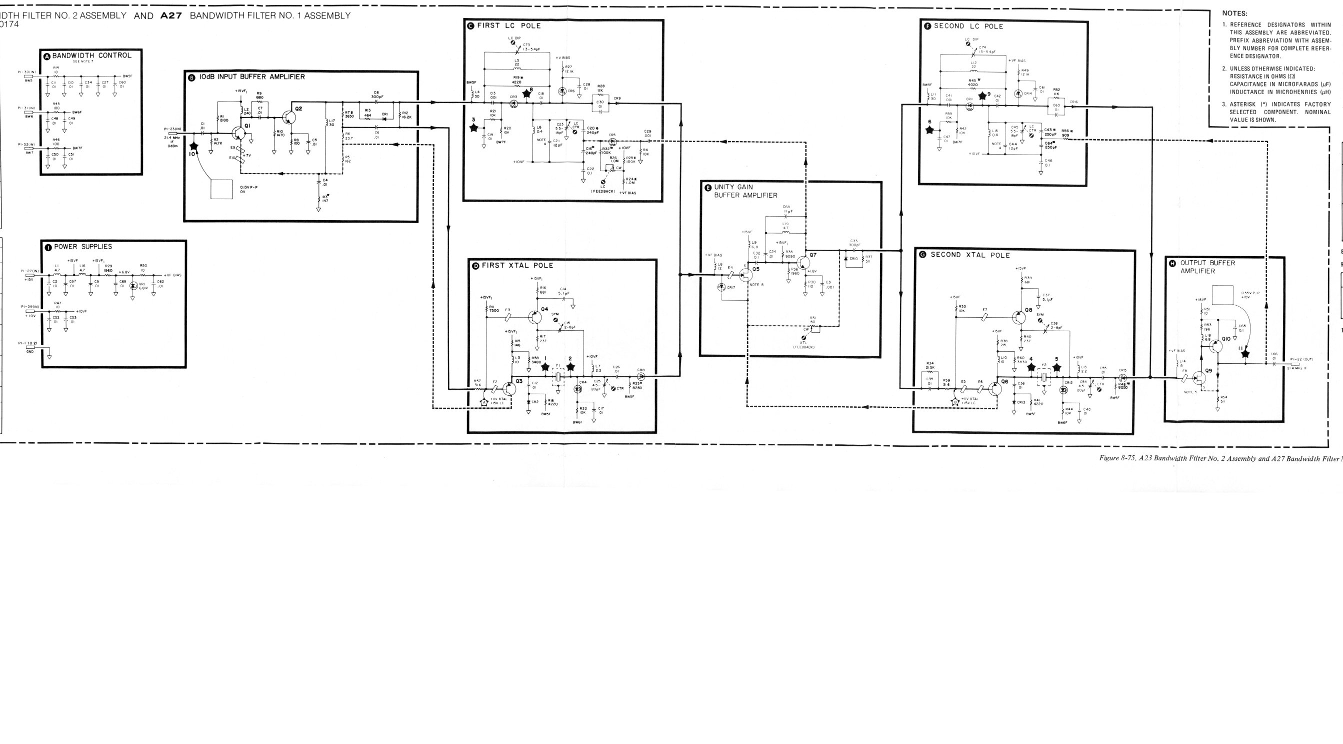

SERIAL PREFIX: 2244A

NOTES:

1. REFERENCE DESIGNATORS WITHIN THIS ASSEMBLY ARE ABBREVIATED. PREFIX ABBREVIATION WITH ASSEMBLY NUMBER FOR COMPLETE REFERENCE DESIGNATOR.
2. UNLESS OTHERWISE INDICATED:
   RESISTANCE IN OHMS (Ω)
   CAPACITANCE IN MICROFARADS (μF)
   INDUCTANCE IN MICROHENRIES (μH)
3. ASTERISK (*) INDICATES FACTORY SELECTED COMPONENT. NOMINAL VALUE IS SHOWN.
4. TEMPERATURE COMPENSATING CAPACITOR.
5. SOURCE VOLTAGE SHOULD BE .2V TO 1.5V GREATER THAN THE GATE VOLTAGE
6. VOLTAGES SHOULD BE MEASURED WITH 1 KΩ OR GREATER AT PROBE TIP TO PREVENT OSCILLATION AND ERRONEOUS READINGS.
7. REFER TO A9 SWEEP GENERATOR/BANDWIDTH CONTROL SCHEMATIC FOR DETAILS ON BANDWIDTH CONTROL.

BANDWIDTH	BW5	XTAL BW6	LC BW7
3 MHz	+14.8V	⩽−4V	+ 5V
1 MHz	+14.8V	⩾−4V	+ 8.5V
300 kHz	+14.8V	⩾−4V	+ 9.5V
100 kHz	+14.8V	⩾−4V	+10V
30 kHz	− .5V	+10V	⩾+10V
10 kHz	− .5V	+ 9.5V	⩾+10V
3 kHz	− .5V	+ 8.5V	⩾+10V
1 kHz	− .5V	+ 5V	⩾+10V

8. TP7 IS NOT ASSIGNED.
9. MNEMONIC TABLE

MNEMONIC	DESCRIPTION
BW5, BW6, BW7	BANDWIDTH CONTROL LINES

10. SIGNAL LEVELS AND TEST POINT WAVEFORMS ASSUME THE FOLLOWING SETTINGS:
    GREEN (NORMAL) SETTINGS
    FREQUENCY SPAN/DIV: 5 MHz
    RESOLUTION BW: 1 MHz
    FREQUENCY BAND: .01–1.8 GHz
    INPUT ATTEN: 0 dB
    REFERENCE LEVEL: −10 dBm
    100 MHz−10 dBm (CAL OUTPUT) SIGNAL INTO INPUT.
    ANALYZER TUNED TO SIGNAL.

A23,A27

Figure 8-75. A23 Bandwidth Filter No. 2 Assembly and A27 Bandwidth Filter No. 1 Assembly, Schematic Diagram

A24 STEP GAIN AMPLIFIER/OSCILLATOR ASSEMBLY, CIRCUIT DESCRIPTION

A24 Step Gain Amplifier/Oscillator Assembly contains three amplifier stages to provide 0 to 28 dB of amplification of the 21.4 MHz third IF signal. (In Option 002, the maximum amplification is 45 dB). There is additional amplification in A25 Up-Down Converter Assembly (17 dB) and in A28 Variable Gain Assembly (5 dB) for a total amplification of 0 to 50 dB. This assembly also varies the reference level by 0 to 12 dB, according to front panel REFERENCE LEVEL FINE control. The amplifier stages, shown in Figure 8-76, are enabled by the front panel REFERENCE LEVEL switch. A 21.4 MHz bandpass filter follows the amplifiers. The TEST/ NORM switch is for testing at a low level gain.

NOTE

The 18.4 MHz oscillator is not included in Option 002.

An 18.4 MHz oscillator is provided in this assembly for use only in the 1 kHz, 300 Hz,and 100 Hz bandwidths. This LO signal is used in A25 Up-Down Converter Assembly.

0 – 12 dB Control Ⓐ

The front-panel REFERENCE LEVEL FINE control provides approximately 0.3 to 12.3 dB of attenuation at the base of Q7. By regulating the current flow through the PIN diode CR3, the amount of signal attenuation is controlled. For example: if diode current is increased, more RF signal is shunted or bypassed to ground. C12 provides the RF ground and also isolates from ground the variable dc from the REFERENCE LEVEL FINE adjustment.

A minimum current flow through the PIN diode (maximum diode resistance) is established by the – 12 dB adjustment R6, so that the diode is never completely cut off. Adjustment of R6 sets the 0.3 dB point and is adjusted with the REFERENCE LEVEL FINE control fully clockwise (– 12 position).

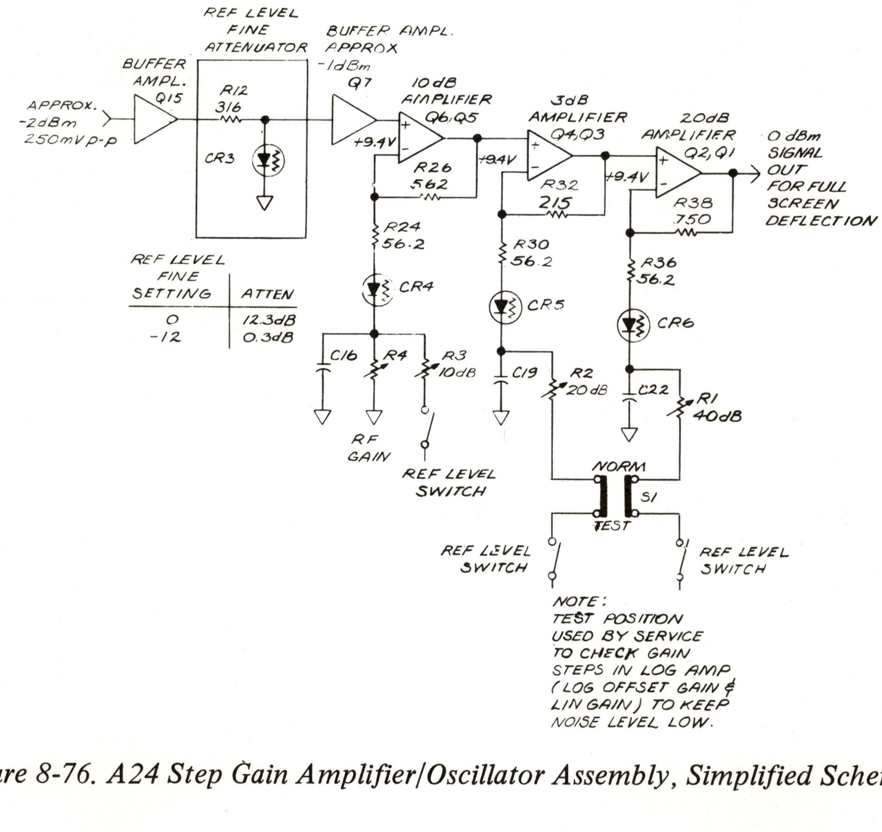

Figure 8-76. A24 Step Gain Amplifier/Oscillator Assembly, Simplified Schematic

The maximum current flow through the PIN diode is set by the 0 dB adjustment R5. R5 is adjusted to the 12.3 dB attenuation point with the REFERENCE LEVEL FINE control fully counterclockwise (0 position).

Transistors Q8 and Q9 are identical current sources. The maximum current is set by R5 in the common base circuit. Diode CR1 provides temperature compensation for the transistors.

Q8 provides current for a bias voltage applied to the anode of the PIN diode CR3. The voltage source consists of R6, R17, and CR2. CR2 provides temperature compensation for the PIN diode. Inductor L5 isolates the current source from the RF signal.

Q9 provides current for a variable voltage source at the cathode of CR3. The REFERENCE LEVEL FINE control, in parallel with R9, is used to match the PIN diode resistance changes. The voltage at the PIN cathode is varied to control CR3 current flow. When the REFERENCE LEVEL FINE control is fully clockwise, the PIN diode is at a minimum conduction and maximum signal is applied to the base of Q7. Conversely, when the control is fully counterclockwise, the PIN diode is forward biased at maximum conduction, and minimum signal is applied to Q7.

Buffer amplifier Q10 operates as an emitter-follower and provides isolation between the 0 – 12 dB Control circuit and A25 Up-Down Converter Assembly.

Step Gain Amplifiers (Standard Instrument) Ⓑ Ⓒ Ⓓ

The three step gain amplifiers (10 dB Amplifier, 3 dB Amplifier, and 15 dB Amplifier) can be considered as operational amplifiers. An equivalent circuit for the three stages is shown in Figure 8-77. The voltage gain for each amplifier is $Av = 1 + R_f/R_i$. The feedback resistance R_f for the 10 dB Amplifier is R26, 562 ohms; for the 15 dB Amplifier it is R38, 562 ohms; and for the 3 dB Amplifier it is R32, 215 ohms. The input resistance R_i is a combination of a fixed series resistance (56.2 ohms) and the controlled resistance of the PIN diodes. The resistance of the PIN diodes is approximately 10 to 1000 ohms and increases as the forward bias current is decreased from 10 mA to 10 μA. R_i is approximately 260 ohms for the 10 dB Amplifier, 123 ohms for the 15 dB Amplifier, and 520 ohms for the 3 dB Amplifier. Selection of the correct combination of step gain amplifiers is effected by the front-panel REFERENCE LEVEL control. Rotating the switch grounds the emitter circuit of the selected amplifier(s), allowing current to flow through the PIN diode(s). The possible switch combinations allow the gain to vary from unity (all switches open) to 28 dB maximum gain with all three emitter circuits grounded.

A TEST/NORM switch, S1, is included in the emitter paths of the 3 dB and 15 dB step gain amplifiers. In TEST, the switch disables 18 dB of gain and allows only 10 dB of gain to be switched in this assembly.

The TEST/NORM switch in A25 Up-Down Converter Assembly disables 17 dB of gain in that assembly. With both switches in TEST, the total gain through A28 Variable Gain Assembly, A25 Up-Down Converter Assembly, and A24 Step Gain Assembly is 15 dB, which is used for adjustments of A22 Log Amplifier Assembly.

Step Gain Amplifiers (Option 002) Ⓑ Ⓒ Ⓓ

The three step gain amplifiers (10 dB Amplifier, 20 dB Amplifier, and 15 dB Amplifier) can be considered as operational amplifiers. An equivalent circuit for the three stages is shown in Figure 8-77. The gain for each amplifier is $Av = 1 + R_f/R_i$. The feedback resistance R_f is R26, 562 ohms, for the 10 dB Amplifier; R32, 750 ohms, for the 20 dB Amplifier; and R38, 562 ohms, for the 15 dB Amplifier. The input resistance R_i is a combination of a fixed series resistance (56.2 ohms) and the controlled resistance of the PIN diodes. The resistance of the PIN diodes is approximately 10 to 1000 ohms and increases as the forward bias current is decreased from 10 mA to 10 μA. R_i is approximately 260 ohms for the 10 dB Amplifier, 83 ohms for the 20 dB Amplifier, and 123 ohms for the 15 dB Amplifier. Selection of the correct combination of step gain amplifiers is controlled by the front-panel REFERENCE LEVEL control. Rotating the switch grounds the emitter circuit of the selected amplifier(s), allowing current to flow through the PIN diode(s). The possible switch combinations

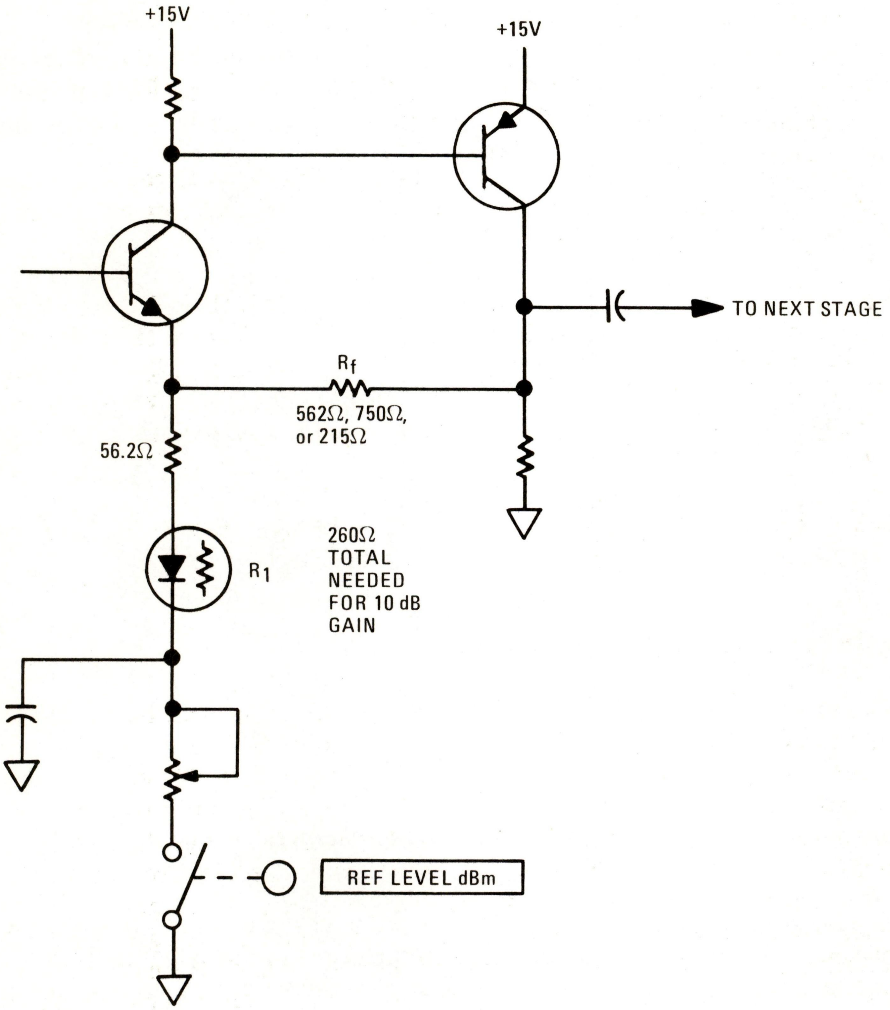

3 dB GAIN

$$\text{Gain dB} = 20 \text{ Log} \left(1 + \frac{R_f}{R_i}\right)$$

$$= 20 \text{ Log} \left(1 + \frac{215}{520}\right)$$

$$= 20 \text{ Log} (1.41)$$

$$= 3 \text{ dB}$$

10 dB GAIN

$$\text{Gain dB} = 20 \text{ Log} \left(1 + \frac{R_f}{R_i}\right)$$

$$= 20 \text{ Log} \left(1 + \frac{562}{260}\right)$$

$$= 20 \text{ Log} (3.16)$$

$$= 10 \text{ dB}$$

15 dB GAIN

$$\text{Gain dB} = 20 \text{ Log} \left(1 + \frac{R_f}{R_i}\right)$$

$$= 20 \text{ Log} \left(1 + \frac{562}{123}\right)$$

$$= 20 \text{ Log} (5.57)$$

$$= 15 \text{ dB}$$

20 dB GAIN

$$\text{Gain dB} = 20 \text{ Log} \left(1 + \frac{R_f}{R_i}\right)$$

$$= 20 \text{ Log} \left(1 + \frac{750}{83}\right)$$

$$= 20 \text{ Log} (10)$$

$$= 20 \text{ dB}$$

Figure 8-77. Step Gain Amplifiers, Equivalent Circuit

allow the gain to vary from unity (all switches open) to 45 dB maximum gain, with all three emitter circuits grounded. In addition, 5 dB of step gain from A28 Variable Gain Assembly is switched in simultaneously with that of the 15 dB Amplifier to provide 20 dB of step gain.

TEST/NORM switch, S1, is included in the emitter paths of the 15 dB and 20 dB step gain amplifiers. In TEST, the switch disables 35 dB of gain and allows only 10 dB of gain to be switched in for adjustments of A22 Log Amplifier Assembly.

21.4 Bandpass Filter

The output of the step gain amplifiers is coupled through a two-section bandpass filter. The filter consists of L9, L10, C24, and C25, and passes only the 21.4 MHz signal.

NOTE

The description of the 18.4 MHz oscillator does not apply to Option 002.

18.4 MHz Oscillator F

The 18.4 MHz oscillator is basically a Colpitts oscillator with a crystal in the feedback path. A simplified schematic is shown in Figure 8-78. The oscillator is used only when the 1 kHz, 300 Hz, or 100 Hz resolution bandwidth is selected. For these three bandwidths, the SWITCH line goes to approximately + 14V, turning the oscillator on. The output of the oscillator should be about − 10 dBm.

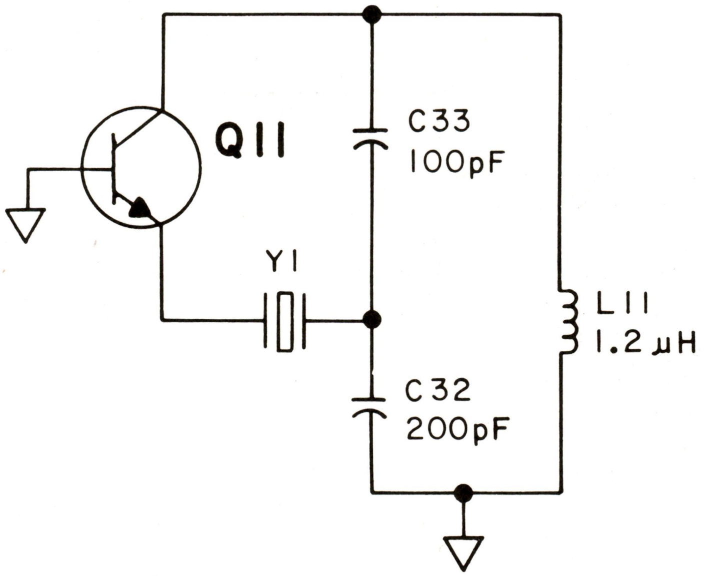

Figure 8-78. 18.4 MHz Oscillator, Simplified Schematic

If the crystal were replaced with a large capacitor, the circuit would oscillate at the resonant frequency of the parallel resonant circuit made of L11, C32, and C33. The resonant frequency is in the range of 17.8 MHz to 19.0 MHz. When the crystal is inserted, the feedback path is broken except at the series resonance of the crystal (18.4 MHz). A fixed capacitor and an air-variable capacitor are in series with the crystal and can pull it several kHz either side of 18.4 MHz.

The voltage output is determined by the current through R55* times the collector load. If the output is too low, the resistance of R55* can be decreased.

The collector voltage is divided by 3 by C32 and C33, and goes to the buffer amplifiers (Q14, Q15 and Q12, Q13). The division ratio is:

$$\frac{\frac{1}{200}}{\frac{1}{200} + \frac{1}{100}} = \frac{1}{3}$$

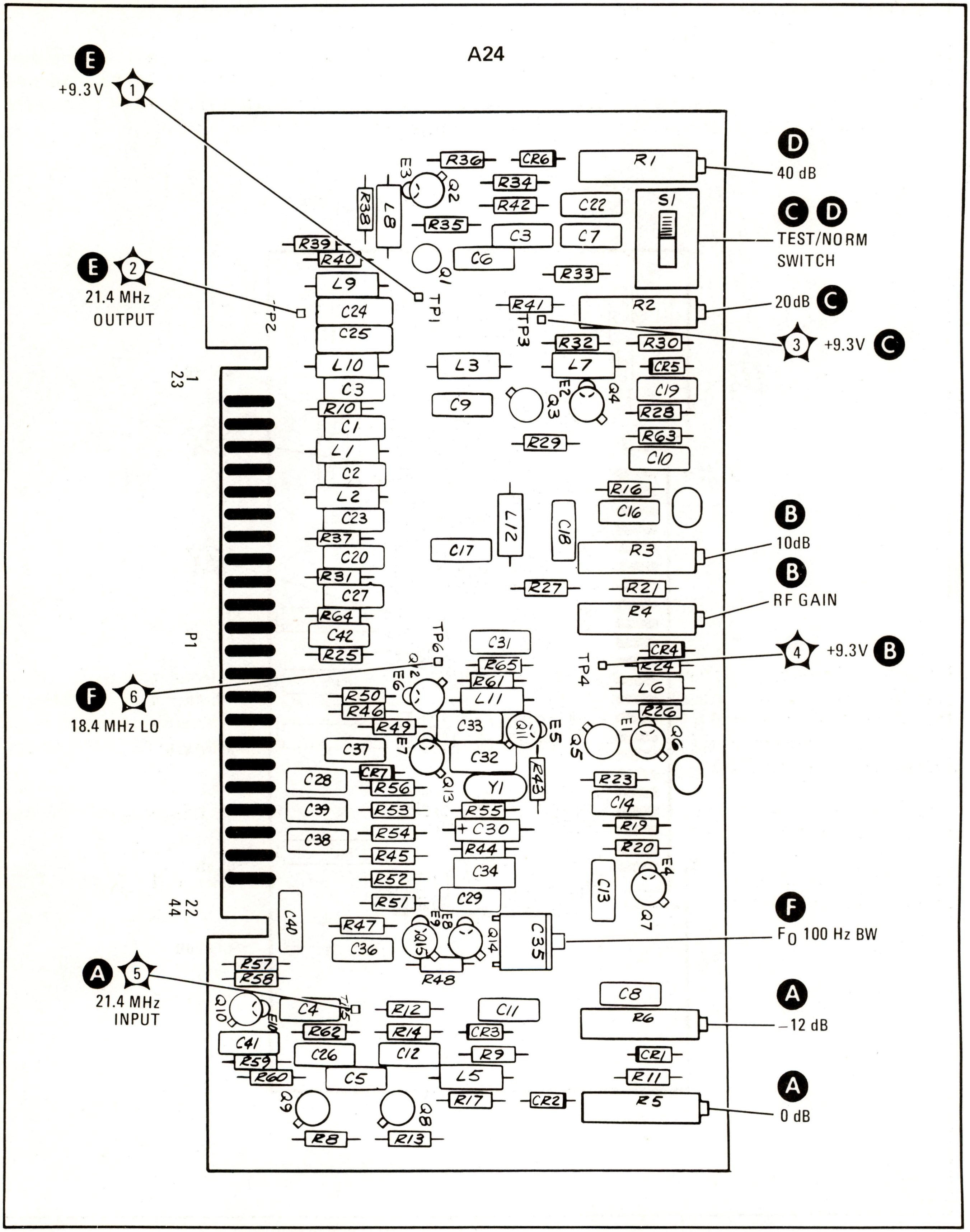

Figure 8-79. A24 Step Gain Amplifier/Oscillator Assembly, Component Locations

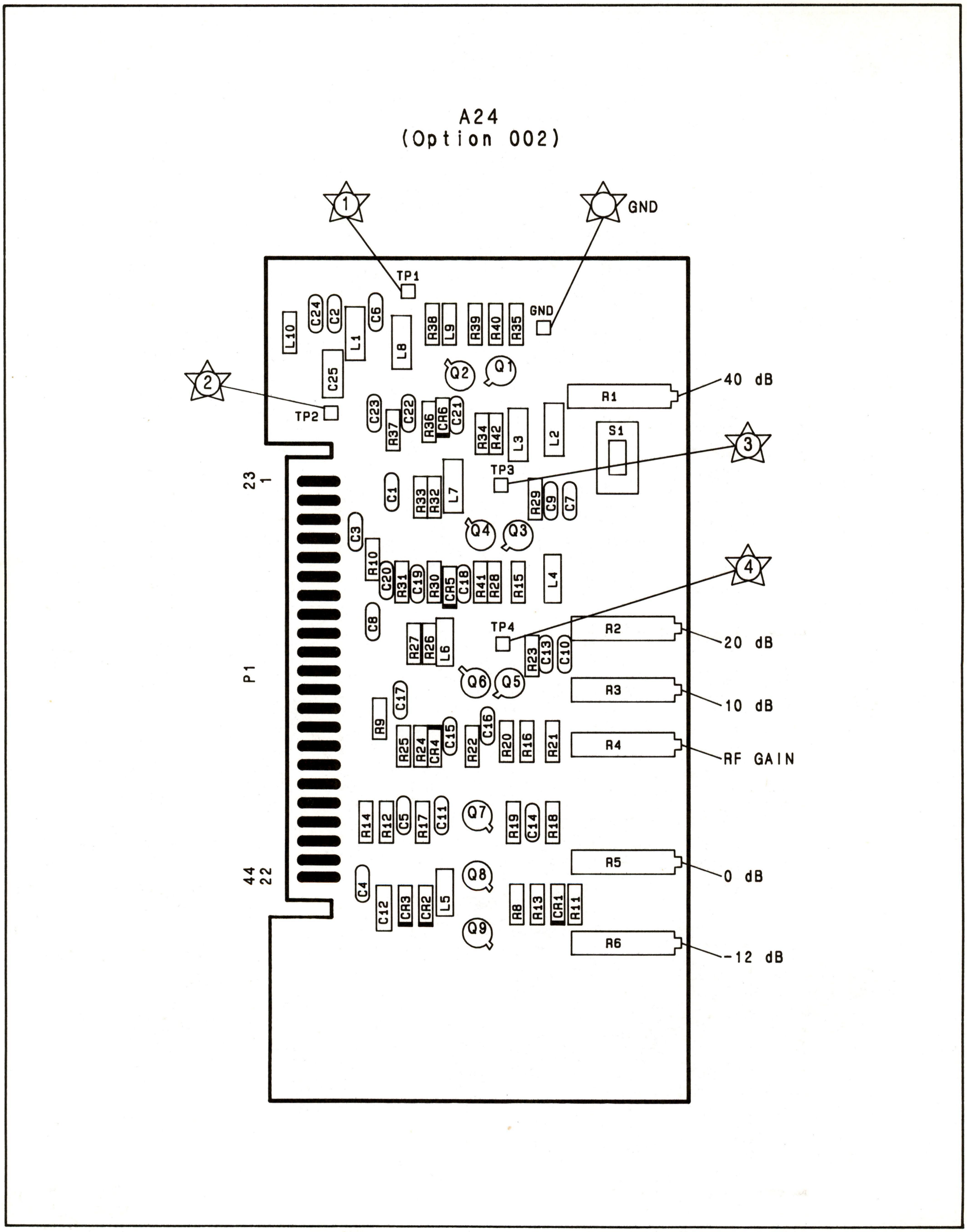

Figure 8-80. A24 Step Gain Amplifier Assembly (Option 002), Component Locations

Problems with Ref Level

Check Log Amp also!

Lines IFG 4,5,6 control the Log Amp

Lines IFG 1,2,3 control step gain

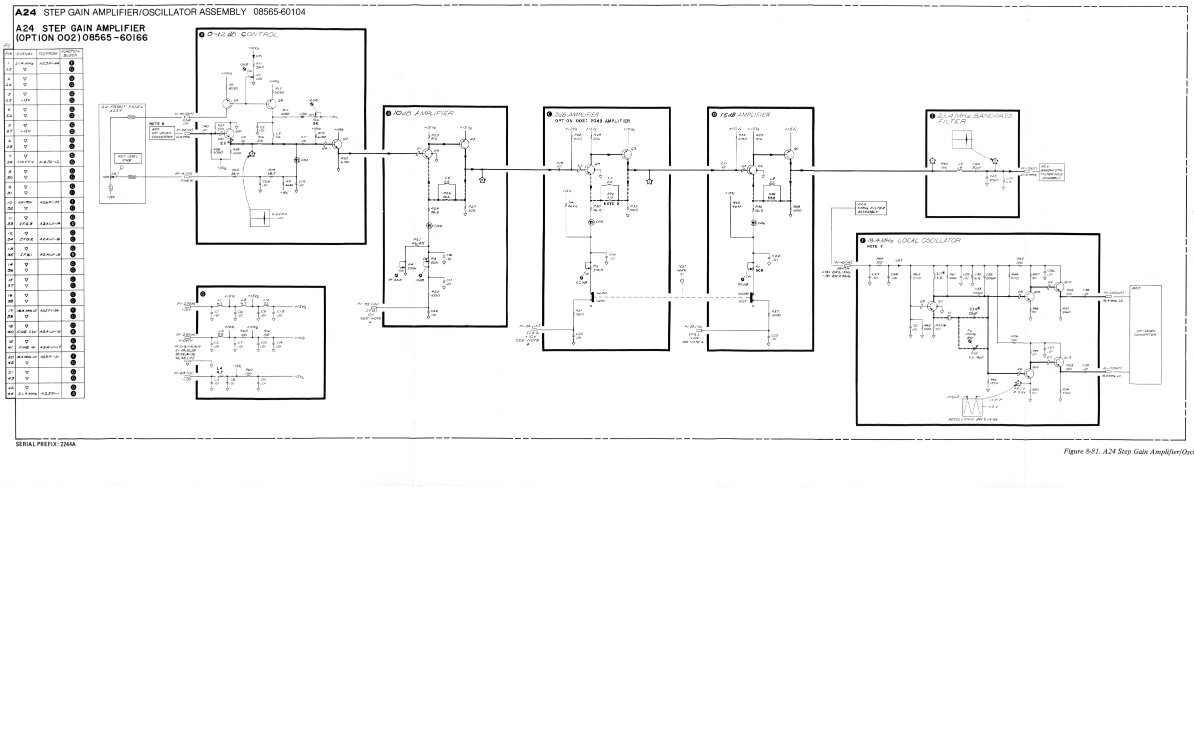

NOTES:

1. REFERENCE DESIGNATORS WITHIN THIS ASSEMBLY ARE ABBREVIATED. FOR COMPLETE DESIGNATOR, PREFIX WITH ASSEMBLY REFERENCE DESIGNATOR.
2. UNLESS OTHERWISE INDICATED:
   RESISTANCE IN OHMS (Ω)
   CAPACITANCE IN MICROFARADS (μF)
   INDUCTANCE IN MICROHENRIES (μH)
3. SIGNAL LEVELS AND TEST POINT WAVE FORMS ASSUME THE FOLLOWING SETTINGS:
   GREEN (NORMAL) SETTINGS.
   FREQUENCY SPAN/DIV: 5 MHz
   RESOLUTION BW: 1 MHz
   FREQUENCY BAND: .01–1.8 GHz
   INPUT ATTEN: 0 dB
   REF LEVEL: –10 dBm
   100 MHz–10 dBm (CAL OUTPUT)
   SIGNAL INTO INPUT.
   ANALYZER TUNED TO SIGNAL.
4. CONTROL LINE VOLTAGES (INPUT ATTEN SET AT 0 dB)

REF LEVEL	IFG1	IFG2	IFG3
-10dBm	>+7V	+10V	+10V
-20dBm	0V	+10V	+10V
-30dBm	>+	0V	+10V
-40dBm	0V	0V	+10V
-50dBm	>+7V	0V	0V
-60dBm AND LOWER	0V	0V	0V

5. * ASTERISK DENOTES FACTORY SELECTED COMPONENT. NOMINAL.
6. ⫽ INDICATES SHIELDING BEAD.
7. 18.4 MHz OSCILLATOR NOT INCLUDED IN OPTION 002.
8. OPTION 002 HAS UP-DOWN CONVERTER BYPASS BOARD.
9. R32 IN OPTION 002 IS 750Ω.

A24

Figure 8-81. A24 Step Gain Amplifier/Oscillator Assembly, Schematic Diagram

A25 UP-DOWN CONVERTER ASSEMBLY, CIRCUIT DESCRIPTION

NOTE

In Option 002, A25 Up-Down Converter Bypass is used in the place of A25 Up-Down Converter Assembly.

A25 Up-Down Converter Assembly converts the 21.4 MHz IF (from A27 Bandwidth Filter No. 1 Assembly) down to a 3 MHz IF so that it can be filtered by A26 3 MHz Filter Assembly. It then converts the filtered 3 MHz IF back up to 21.4 MHz. Since Q is equal to center frequency divided by bandwidth, the use of 3 MHz to shape the most narrow bandwidths (100 Hz, 300 Hz, and 1 kHz) allows a design with crystals of more feasible Q.

Switchable Gain Amplifier Ⓐ

The Switchable Gain Amplifier is controlled by the same line (IFG2) that controls the 3 dB Amplifier in A24 Step Gain Amplifier/Oscillator Assembly. With this board installed, the 3 dB Amplifier yields only about 3 dB gain. The other 17 dB is provided by the Switchable Gain Amplifier. When IFG2 is high, the gain is unity. When IFG2 is low, CR11 is on, and the gain is:

$$\text{Gain dB} = 20 \log \left(1 + \frac{R44}{R46}\right) = \sim 17 \text{ dB}$$

A TEST/NORM switch is provided so that 17 dB of gain can be disabled. The TEST/NORM switch in A24 Step Gain Amplifier/Oscillator Assembly disables 18 dB of gain in that assembly. With both switches in TEST, the total gain through A28 Variable Gain Assembly, A25 Up-Down Converter Assembly, and A24 Step Gain Assembly is a switchable 15 dB, which is used for adjustments of A22 Log Amplifier Assembly.

Switch and Bypass Ⓑ

The Switch and Bypass circuit routes the 21.4 MHz IF straight through to A24 Step Gain Amplifier/Oscillator Assembly for bandwidths $\geq$3 kHz (SWITCH line approximately −8V). For bandwidths $\leq$1 kHz (SWITCH line approximately +14V) the signal is routed through the Down Converter, then to A26 3 MHz Filter Assembly, and back to the Up Converter. Diodes CR1, CR2, CR4, and CR5 act as switches controlled by the SWITCH line.

Down Converter Ⓒ

The Down Converter first matches the 21.4 MHz to a low impedance through C6, C7, and L1 with a corresponding decrease in voltage gain of about 15 dB. This signal is mixed with 18.4 MHz from the LO Driver, which is turned on by the SWITCH line through CR6. The difference frequency (3 MHz) is selected by the bandpass filter C12, L2, and R17 and amplified by the complementary-pair feedback amplifier Q10 and Q11. DC GAIN potentiometer R20 is adjusted so that the gain in the down-converted path is equal to the gain (unity) in the bypass path.

Up Converter Ⓓ

The Up Converter mixes the 3 MHz from A26 3 MHz Filter Assembly with the 18.4 MHz from the LO Driver. The sum frequency (21.4 MHz) is selected by matching filter L3 and C19 and is amplified by Q2. Q3, Y1, and C26 form a narrow bandwidth (approximately 10 kHz) 21.4 MHz Bandpass Filter to eliminate 18.4 MHz and its harmonics from the signal path. LO NULL adjustment C24 maximizes the out-of-band rejection.

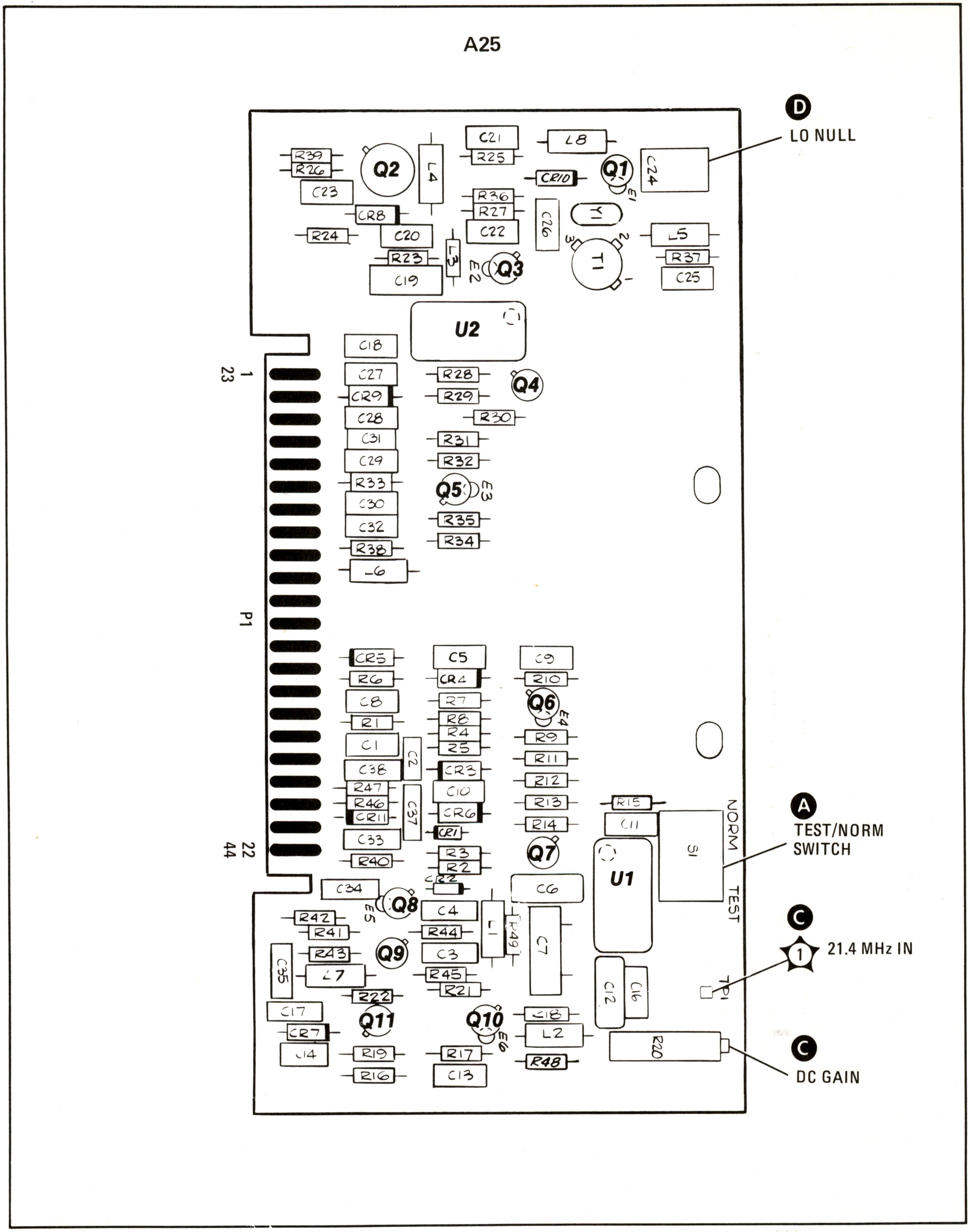

Figure 8-82. A25 Up-Down Converter Assembly, Component Locations

A25 UP-DOWN CONVERTER ASSEMBLY
08565-60195

NOT USED IN OPTION 002.

P1

PIN	SIGNAL	TO/FROM	FUNCTION BLOCK
1 23	3MHz NC	A26P1-23	D
2 24	▽ ▽		E E
3 25	▽ NC		E
4 26	▽ ▽		E E
5 27	▽ ▽		E E
6 28	▽ ▽		E E
7 29	▽ ▽		E E
8 30	SWITCH NC	A26P1-33	B
9 31	▽ 18.4MHz	A24P1-17	E D
10 32	▽ 21.4MHz	A25P1-35	E B D
11 33	NC NC		
12 34	NC NC		
13 35	▽ 21.4MHz	A25P1-32	E B
14 36	▽ 18.4MHz	A24P1-20	E C
15 37	▽ SWITCH	A26P1-33	E B
16 38	▽ ▽		E E
17 39	▽ 21.4MHz	A24P1-44	E B
18 40	▽ ▽		E E
19 41	▽ IFG2	A24P1-34	E A
20 42	▽ +15V		E E
21 43	▽ ▽		E E
22 44	3MHz 21.4MHz	A26P1-44 A27P1-22	C A

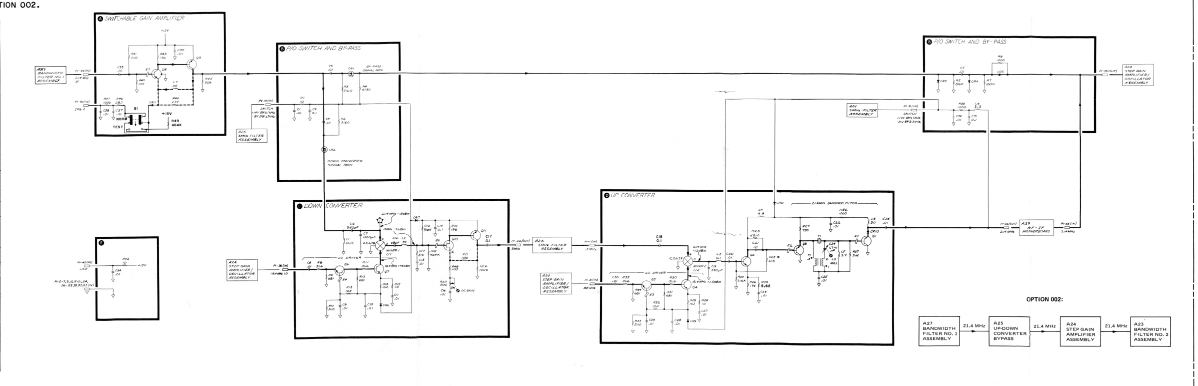

SERIAL PREFIX: 2244A

NOTES

1. REFERENCE DESIGNATORS WITHIN THIS ASSEMBLY ARE ABBREVIATED. FOR COMPLETE DESIGNATOR, PREFIX WITH ASSEMBLY REFERENCE DESIGNATOR.
2. UNLESS OTHERWISE INDICATED: RESISTANCE IN OHMS (Ω) CAPACITANCE IN MICROFARADS (μF) INDUCTANCE IN MICROHENRIES (μH)
3. —▯— DENOTES SHIELDING BEAD.
4. * ASTERISK DENOTES FACTORY SELECTED COMPONENT. NOMINAL VALUE SHOWN.
5. TOP VIEW T1:

A25

Figure 8-83. A25 Up-Down Converter Assembly, Schematic Diagram

A26 3 MHz FILTER ASSEMBLY, CIRCUIT DESCRIPTION

A26 3 MHz Filter Assembly provides filtering for the bandwidths of 1 kHz, 300 Hz, and 100 Hz. The 21.4 MHz IF from A27 Bandwidth Filter No. 1 Assembly is converted down to 3 MHz in A25 Up-Down Converter Assembly. After filtering, the 3 MHz IF is converted back to 21.4 MHz in A25 and sent to A24 Step Gain Amplifier/Oscillator Assembly.

A26 3 MHz Filter Assembly consists of five almost identical, synchronously tuned crystal filtering stages, an Output Buffer Amplifier, and a Bandwidth Control circuit. The bandwidths of all the stages are switched simultaneously to yield bandwidths of 1 kHz, 300 Hz, and 100 Hz. These bandwidths can be changed only by the selection of resistance values.

The Third Stage (typical of all five filtering stages), the Output Buffer Amplifier, and the Bandwidth Control are described below.

Third Stage (D)

Q7 and Q8 act as a complementary-pair buffer amplifier. R22 and R23 determine the gain:

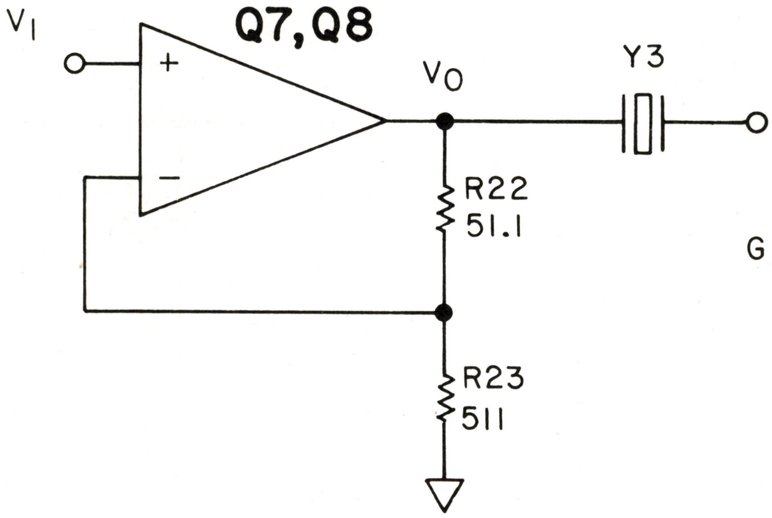

$$G = 1 + \frac{R22}{R23} \approx 2dB$$

A portion of the signal is on the emitter of Q7; this signal is 180 degrees out of phase with the input signal, producing an inverted output that is used to cancel out the case capacitance of crystal Y3. SYM adjustment C19 varies the inverted current into the output of the stage so that it is equal in magnitude and opposite in phase to the current through the case capacitance (C_O) of the crystal:

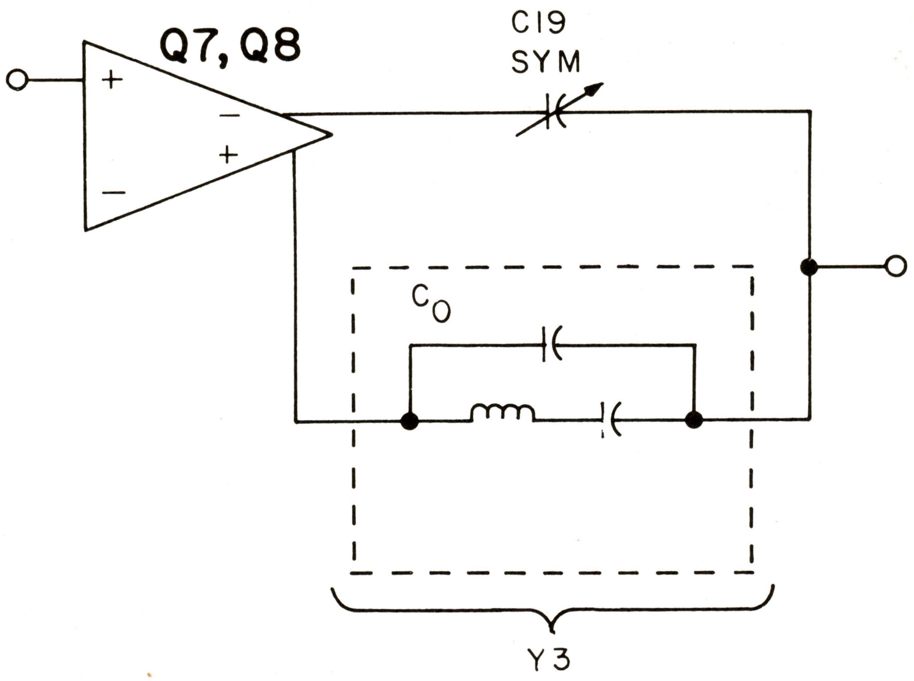

CTR adjustments C20 and L6 are used to compensate for undesired capacitances (PC board, etc.).

The Q (and therefore the bandwidth) of the stage is determined by R27* and R28* in the Third Stage and the parallel combination of R29* and R30* in the Fourth Stage. CR5 and CR6 act as switches:

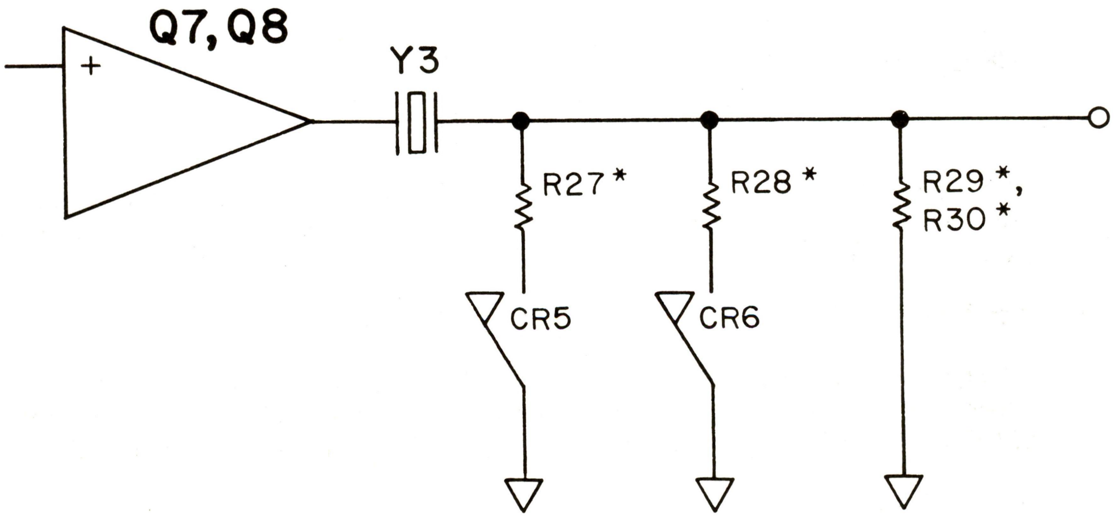

In the 1 kHz bandwidth, CR5 and CR6 are off, as BW8 and BW9 are low. Therefore, the Q is determined only by R29* and R30*. In the 300 Hz bandwidth, BW9 goes high (about +15V) and turns CR6 on. For this bandwidth, R28* determines the Q. In the 100 Hz bandwidth, BW8 goes high (about +15V) and turns CR5 on. For this bandwidth, only R27* determines the Q.

Output Buffer Amplifier G

The Output Buffer Amplifier acts as an op amp connected for non-inverting operation. A simplified schematic is shown in Figure 8-84.

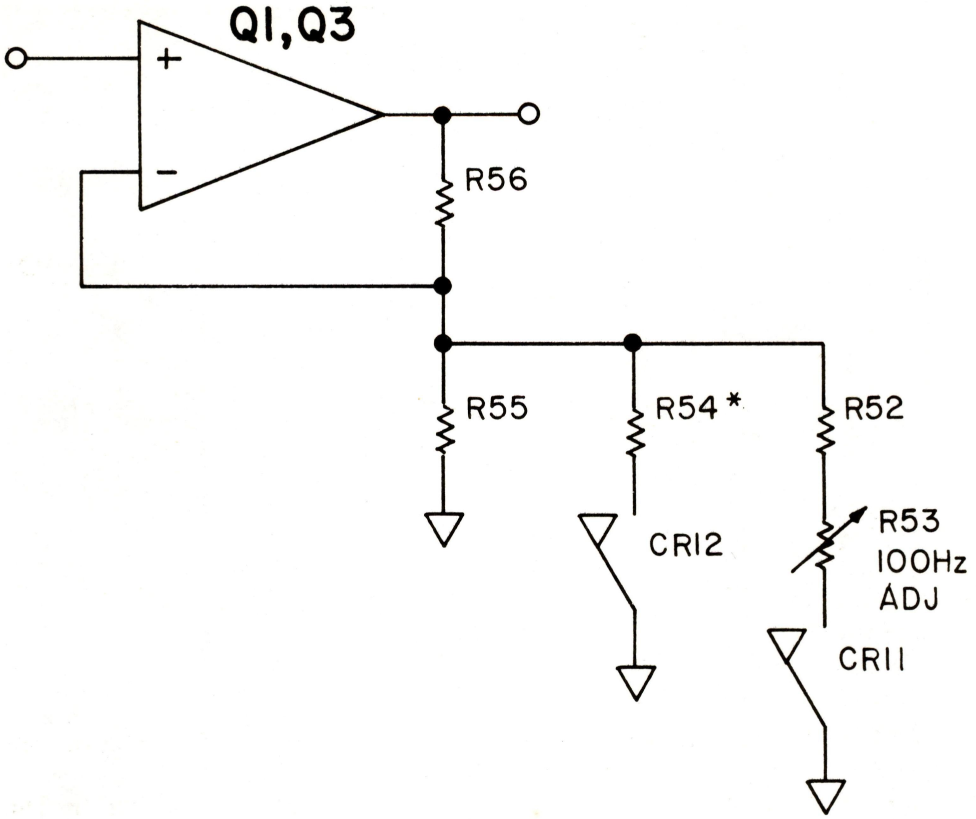

Figure 8-84. Output Buffer Amplifier, Simplified Schematic

With CR11 and CR12 off (BW8 and BW9 low), the gain of the circuit is:

$$\text{Gain dB} = 20 \log \left(1 + \frac{R56}{R55}\right) = \sim 2 \text{ dB}$$

When BW8 or BW9 goes high, putting the filters in a more narrow bandwidth, the filters require more gain to compensate for the increased loss. BW8 and BW9 switch in CR11 and CR12 respectively to accomplish this. The gain correction is about 1 dB or less.

Bandwidth Control (B)

The Bandwidth Control circuit determines the voltage on the SWITCH line. Q13 sinks about 8 mA whether the SWITCH line is high or low. If neither BW8 nor BW9 is pulled high from the front panel, and if BW10 is not pulled high by A21 Video 100 Hz Assembly, then Q13 pulls the SWITCH line down to about −8V.

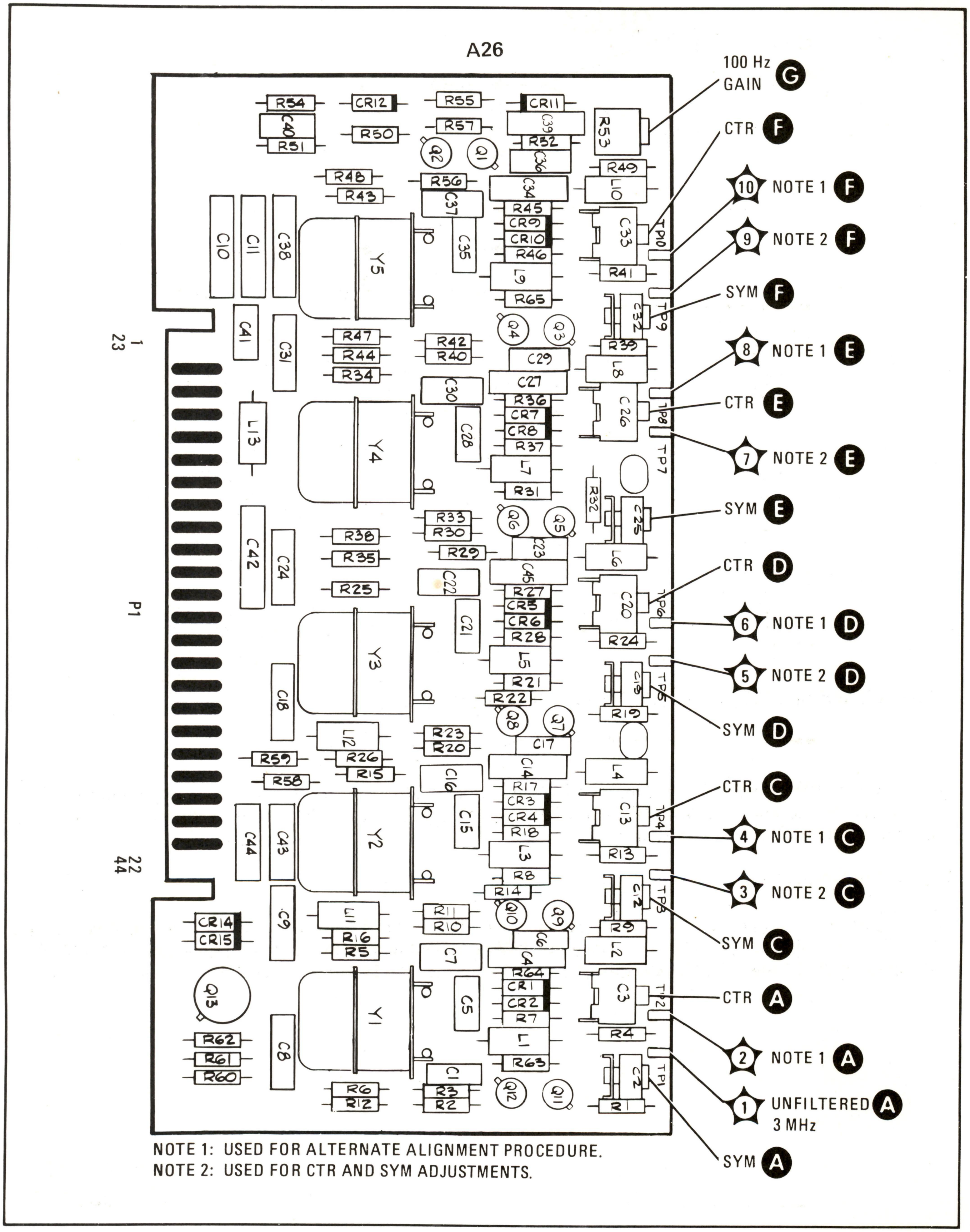

Figure 8-85. A26 3 MHz Filter Assembly, Component Locations

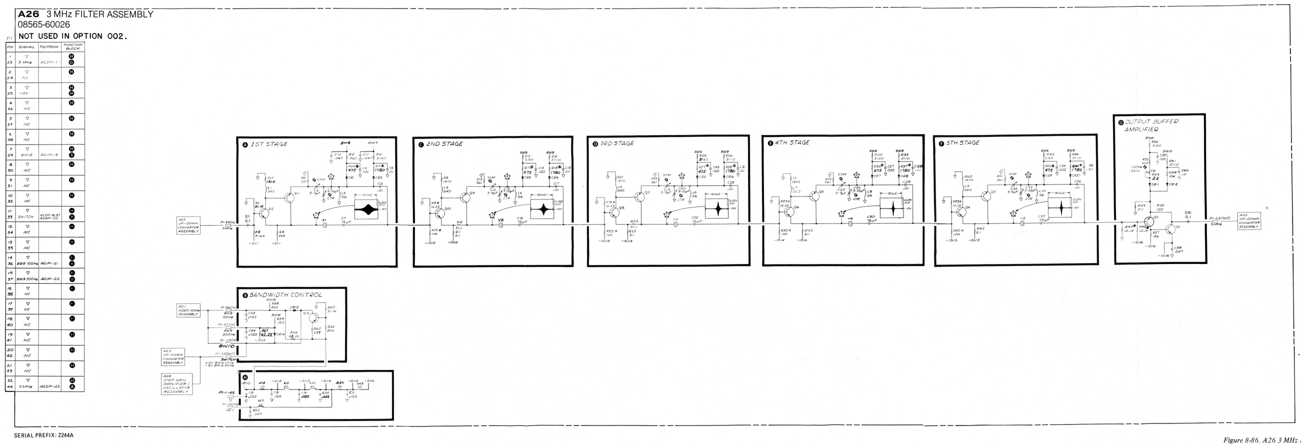

NOTES

1. REFERENCE DESIGNATORS WITHIN THIS ASSEMBLY ARE ABBREVIATED. FOR COMPLETE DESIGNATOR, PREFIX WITH ASSEMBLY REFERENCE DESIGNATOR.
2. UNLESS OTHERWISE INDICATED:
   RESISTANCE IN OHMS (Ω)
   CAPACITANCE IN MICROFARADS (μF)
   INDUCTANCE IN MICROHENRIES (μH)
3. * ASTERISK DENOTES FACTORY SELECTED COMPONENT. NOMINAL VALUE SHOWN.
4. SIGNAL LEVELS AND TEST POINT WAVEFORMS ASSUME THE FOLLOWING SETTINGS:
   GREEN (NORMAL) SETTINGS
   FREQUENCY SPAN/DIV: 2 kHz
   RESOLUTION BW: 1 kHz
   FREQUENCY BAND: .01–1.8 GHz
   INPUT ATTEN: 0 dB
   REF LEVEL: –10 dBm
   100 MHz –10 dBm (CAL OUTPUT) SIGNAL INTO INPUT
   ANALYZER TUNED TO SIGNAL

A26

Figure 8-86. A26 3 MHz Filter Assembly, Schematic Diagram

A28 VARIABLE GAIN ASSEMBLY, CIRCUIT DESCRIPTION

A28 Variable Gain Assembly has four functions: It amplifies the 21.4 MHz signal from A37 Third Converter Assembly, it varies gain (or attenuation) to compensate for changes in conversion efficiency of the RF section, it provides variable gain for reference level calibration, and it provides attenuation for the signal identification function.

Z Matching Filter Ⓐ and IF Preamplifier Ⓑ

Transistor Q7 provides voltage gain while transistor Q6 serves as an emitter follower output buffer. Because of collector-to-base feedback (R2), the IF Preamplifier has low (approximately 50Ω) input impedance. The Z Matching Filter matches the 50-ohm output from A37 Third Converter Assembly to the IF Preamplifier.

Calibrated Flatness Compensating Attenuator Ⓒ

The Calibrated Flatness Compensating Attenuator has about 20 dB of range to compensate for the change in conversion efficiency of the RF section through each band. The large changes in conversion efficiency which occur when switching bands is compensated for in the Band Conversion Loss Compensating Amplifier, which is discussed later. The variable attenuator is controlled from A20 Bias Assembly, which sinks current through PIN diodes CR1 and CR2. The more current it sinks, the greater the attenuation.

PIN RES pot R7 is used to calibrate the attenuator so that A28 Variable Gain Assembly can be changed without seriously affecting the flatness of the instrument. Q5 is the constant current source which can be manually switched in to accomplish this calibration.

5 dB Step Gain Amplifier Ⓓ

The buffer amplifier Q8 operates as an emitter-follower and provides isolation between the IF preamplifier circuit and Q9.

Transistor Q9 functions as either a unity gain amplifier or as a 5 dB gain amplifier that is switched in conjunction with the 15 dB Step Gain Amplifier circuit of A24 Step Gain Amplifier Assembly.

The gain of the Q9 stage is set by the ratio R42/R44. When the 15 dB Step Gain Amplifier circuit of A24 is selected (IFG3 line grounded), R46 is switched in parallel with R44, resulting in a gain of 5 dB for Q9.

Band Conversion Loss Compensating Amplifier Ⓔ

The Band Conversion Loss Compensating Amplifier changes gain in discrete steps that are roughly equal to the changes in conversion loss associated with band switching in the RF section. In bands B1 and B2, the circuit has unity gain. For bands B3 through B6, more gain is switched in by diodes CR3 and CR7 (see Figure 8-87).

The values of R19, R21, and R23 are different for different First Mixer Assemblies. If a new Variable Gain Assembly or First Mixer Assembly (A30) is fitted, these resistor values must be changed. (See Section V, Adjustments.)

Reference Level Calibration Attenuator Ⓕ

The Reference Level Calibration Attenuator functions as a common emitter amplifier with gain ranging from about +5 dB to −5 dB. The current through the PIN diodes CR8 and CR9 modulates their resistance and the gain of the amplifier. The REF LEVEL control on the front panel diverts away from the PIN diodes varying amounts of current from the +10VTV supply. If the control is open or the line broken, the amplifier will stay in the minimum gain condition.

Signal Identifier Attenuator Ⓖ

The Signal Identifier Attenuator functions as a common emitter amplifier with gain of about 2 dB, except when the SIG IDENT AMPL line goes to +15V. This switches in an additional resistor R33 and lowers the gain to about −2 dB.

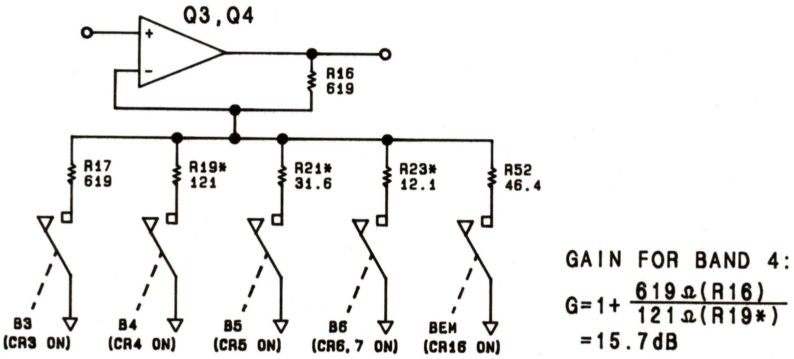

Figure 8-87. Band Conversion Loss Compensation (Gain Switching), Simplified Schematic

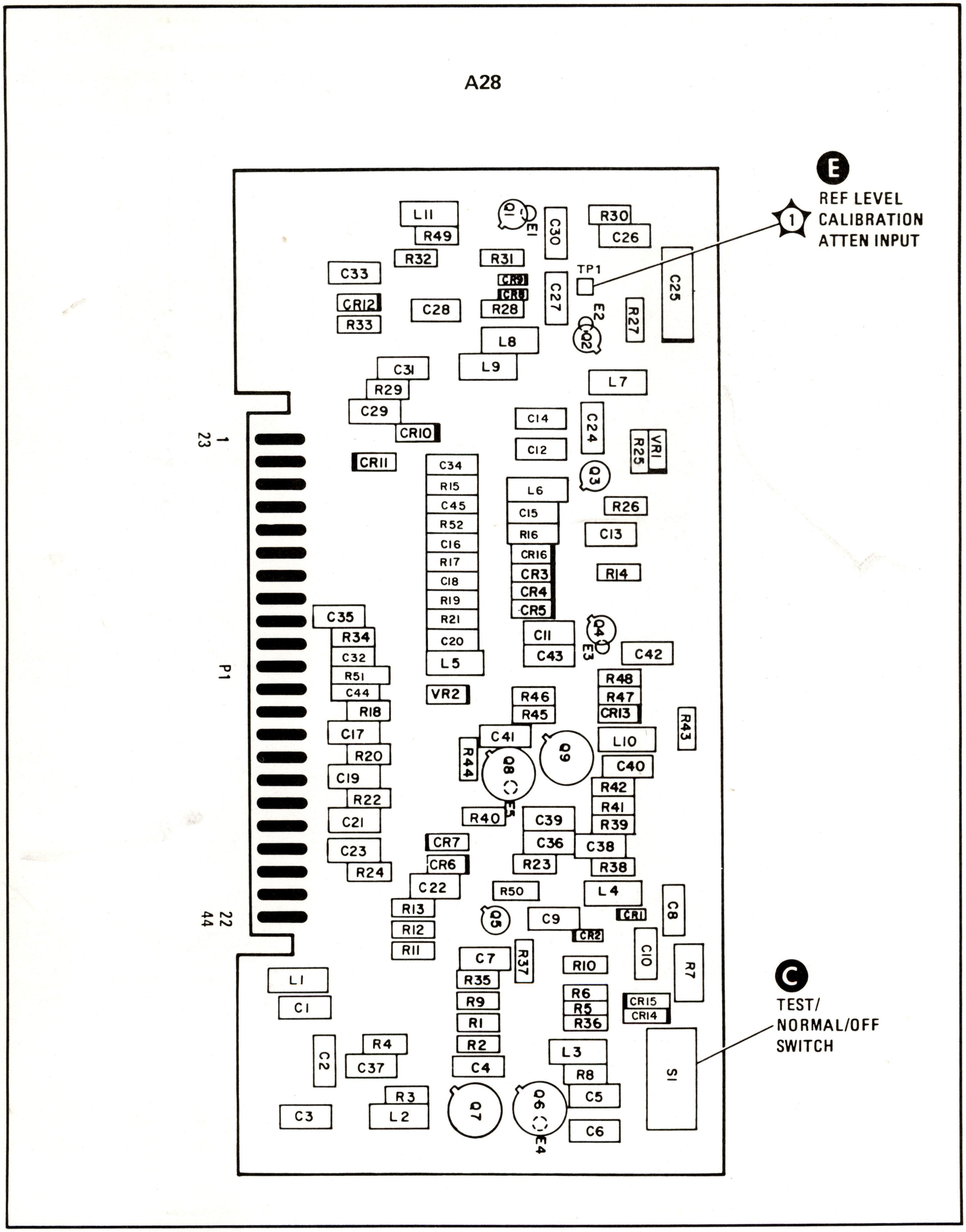

Figure 8-88. A28 Variable Gain Assembly, Component Locations

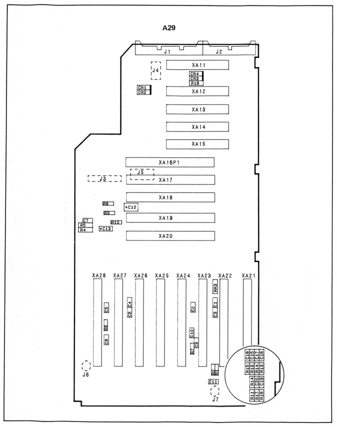

Figure 8-90. A29 RF-IF Motherboard, Component Locations

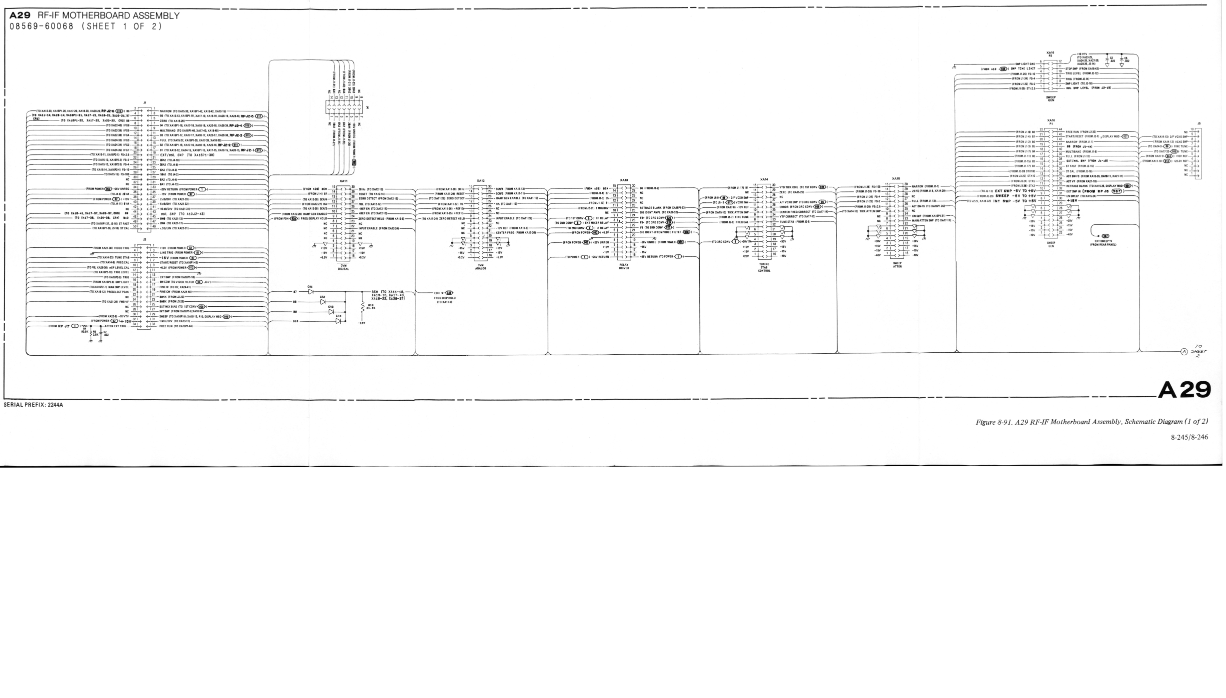

Figure 8-91. A29 RF-IF Motherboard Assembly, Schematic Diagram (1 of 2)

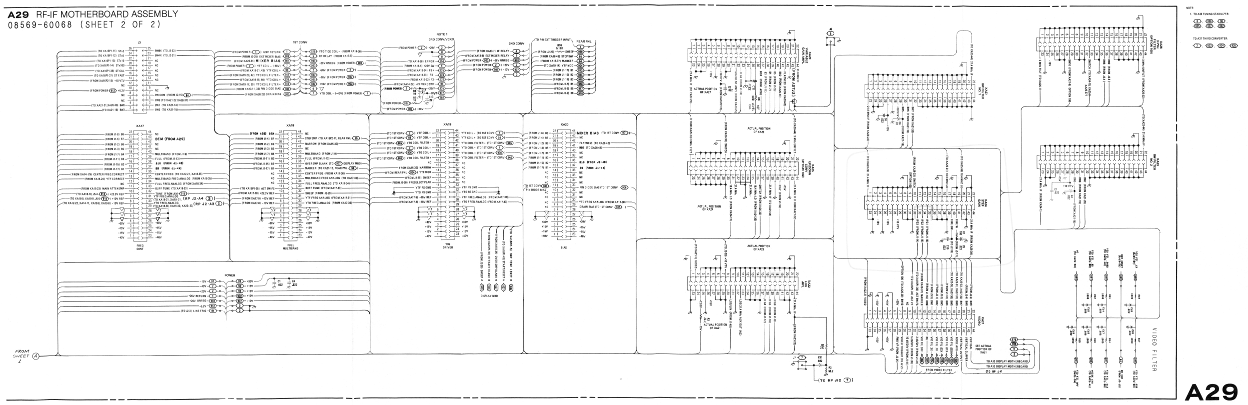

Figure 8-91. A29 RF-IF Motherboard Assembly, Schematic Diagram (2 of 2)

A30. A31, A32, A33, A34 RF INPUT ASSEMBLIES, CIRCUIT DESCRIPTION

CAUTION

While working with and around the semi-rigid coaxial cables connected to the RF Input Assemblies, do not bend the cables more than necessary. Do not torque the RF connectors to more than 2 inch-pounds. Be especially careful when working on the connectors on the First Mixer Assembly.

The RF Input Assemblies include A30 First Mixer Assembly, A31 YTO Assembly, A32 YTF Assembly, A33 Limiter, and A34 RF Attenuator Assembly, as well as three coaxial RF switches, three pads, two low-pass filters, and one isolator.

A34 RF Attenuator Assembly Ⓐ

A34 RF Attenuator Assembly attenuates input signals ranging from .01 to 22 GHz. Attenuation is selectable from 0 dB to 70 dB in 10 dB steps. It consists of four attenuation sections that can be inserted or removed from the signal line by latching self-disconnecting relays. Three of the sections have 20 dB attenuation and the fourth, 10 dB attenuation. There is a common control line to the relays (+26V UNREG), and each relay has two wires: one for switching an attenuation section in, and the other for switching it out. Switching is accomplished by grounding of the control lines. A switch associated with each relay opens the control line path after switching has occurred. Thus, the relay draws current only during the actual switching operation. The control lines for the attenuator are activated by the INPUT ATTEN control at the front panel. An exploded view of INPUT 50Ω connector J1 is shown in Figure 8-92.

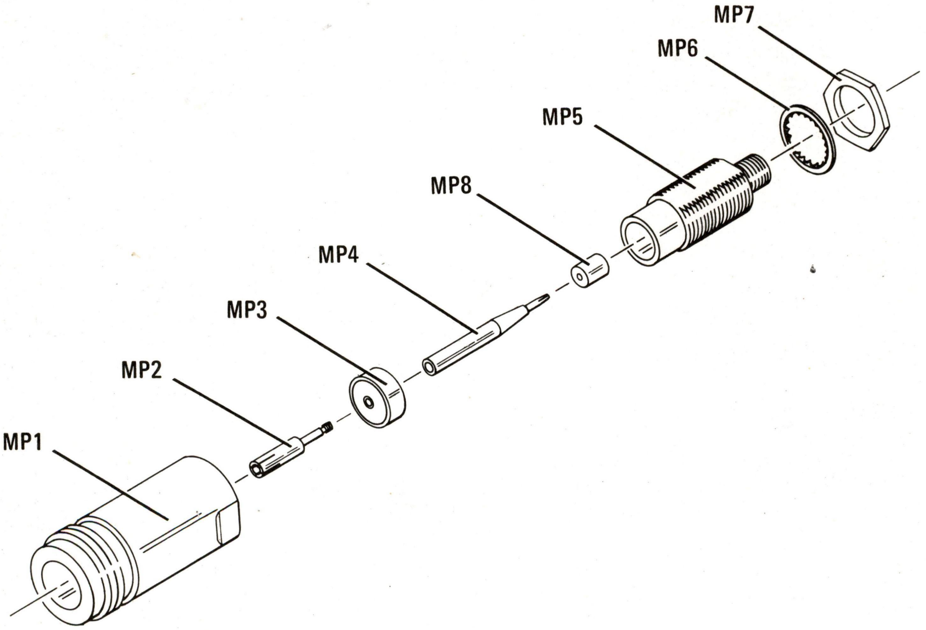

Figure 8-92. INPUT 50 Ohm Connector J1, Exploded View

RF Switches K2 and K1 Ⓑ Ⓖ

K2 and K1 are dc to 22 GHz coaxial RF switches. For FREQUENCY BAND GHz .01 – 1.8, they switch the Limiter and the 1.8 GHz Low-Pass Filter onto the signal line. For the other internal-mixing FREQUENCY BAND GHz settings, covering 1.7 to 22 GHz, A32 YTF Assembly is switched onto the signal line. The control for these relays comes from A13 Relay Driver Assembly.

A33 Limiter (C)

A33 Limiter contains diodes which clamp the voltage on the signal line to protect the First Mixer diode from excessive power and peak voltage levels applied to the 50Ω INPUT of the analyzer. The Limiter is used only in FREQUENCY BAND GHz .01 – 1.8.

1.8 GHz Low-Pass Filter (D)

The 1.8 GHz Low-Pass Filter FL3 is used in FREQUENCY BAND GHz .01 – 1.8 to filter out signals above the frequency band range, reducing the level of the image and multiple responses in the analyzer. This filter has good rejection at 2050 MHz, which is the first IF for this frequency band, to reduce baseline lift caused by an input signal at this frequency.

A32 YIG-Tuned Filter Assembly (E)

A32 YTF Assembly is a preselector in the analyzer for the internal-mixing FREQUENCY BAND GHz settings covering 1.7 to 22 GHz. Its purpose is to reduce image, multiple, and spurious responses. The YTF has three YIG spheres as the resonators (providing a 3-pole filter) with coupling to the spheres accomplished with coupling loops. The input coupling loop is connected to ground; thus, the filter is a short to ground for dc and low frequencies. The resonant frequency of the YIG spheres is proportional to the applied magnetic field, which is proportional to the current in the YTF Coil. The YTF frequency tracks the YTO (first LO) fundamental or harmonic frequency, with a 321.4 MHz offset (see schematic Note 8).

6 dB and 3 dB Pads (F) (H)

The 3 dB pad AT4 isolates the A30 First Mixer Assembly from A32 YTF Assembly or 1.8 GHz Low-Pass Filter. The 3 dB pad AT3 provides additional isolation between the YTF Assembly and the First Mixer Assembly, while the 3 dB pad AT7 provides additional isolation between the First Mixer Assembly and the 1.8 GHz Low-Pass Filter. The isolation achieved by these pads improves the frequency response of the analyzer, but at a sacrifice in sensitivity.

Isolator AT2 (J)

The YTO signal is fed through A30 First Mixer Assembly, Isolator AT2, and the 4.9 GHz Low-Pass Filter before going to the Sampler in A36 Tuning Stabilizer Assembly. This isolator buffers the First Mixer Assembly from the Sampler for the first LO frequencies of 2 – 4.5 GHz. After the Sampler, the LO signal goes to the front panel 1st LO OUTPUT connector.

4.9 GHz Low-Pass Filter (L)

The 4.9 GHz Low-Pass Filter FL4 is in the signal path between A30 First Mixer Assembly and the Sampler in A14 Tuning Stabilizer Control Assembly. FL4 filters out the third harmonic of the YTO signal that is applied to the Sampler.

A30 First Mixer Assembly (I)

A30 First Mixer Assembly (Figure 8-93) is a sealed microcircuit which is not field repairable. A simplified schematic is shown in Figure 8-94. The unit mixes the .01 to 22 GHz input signals with the 2.0 to 4.46 GHz first LO signal from the YIG-Tuned Oscillator (YTO). Fundamental mixing is used for the two lowest frequency bands, and harmonic mixing (N = 2,3,4, and 5) is used for the other internal mixing bands. In harmonic mixing, the outputs are the sum and difference frequencies of the input, and N times the LO. For some bands the sum frequency is used, and for others, the difference frequency. The mixing equation is:

$$f_S = Nf_{LO} \pm f_{IF}.$$

The IF frequency is 2050 MHz for the FREQUENCY BAND GHz setting of .01 – 1.8, and 321.4 MHz for the other internal mixing settings of 1.7 – 22. (See schematic Note 8 for FREQUENCY BAND GHz versus harmonic number N and IF frequency.) Conversion loss of the Mixer is approximately 2 dB for fundamental mixing. The output of the YTO is coupled, via internal directional couplers, into both the internal mixer and the transmission path for the external mixer. In addition, the YTO signal is fed through A30 First Mixer Assembly to the Sampler in A14 Tuning Stabilizer Control Assembly via the isolator AT2 and the 4.9 GHz Low-Pass Filter.

Bias Assembly A20 varies mixer bias and pin diode bias. A different bias is used for each harmonic to provide optimum conversion loss and flatness for that particular harmonic mixing mode. In addition to mixer bias, the First Mixer Assembly requires +5V to power the FET buffer amplifier. When the 0.01 – 1.8 GHz frequency band is used, –6.5V is supplied to the PIN DIODE BIAS port, switching in a transmission line (Figure 8-94) to optimize the mixing and IF match. In other frequency bands, +20V is supplied to the PIN DIODE BIAS port.

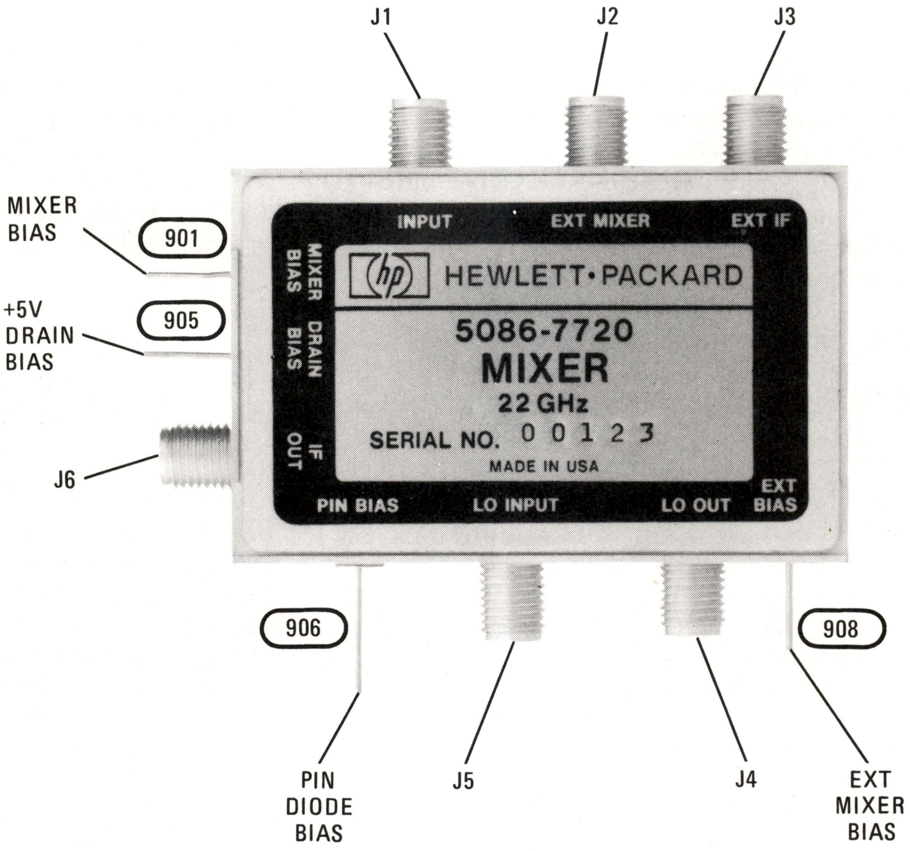

Figure 8-93. A30 First Mixer Assembly

Two signals utilize the EXT MIXER port: the external mixer's DC bias and it's mixing product. The DC bias is varied by front-panel adjustment EXT MIXER BIAS, and is routed from the First Mixer to the external mixer. The IF mixing product from the external mixer, 321.4 MHz, passes through the first mixer and is then routed to the Third Converter by switches K4 and K5, bypassing the Second Converter.

CAUTION

To avoid destruction of the FET amplifier, never use an ohmmeter from the Drain to ground. When the Mixer must be disconnected, be sure the soldering iron and the DRAIN BIAS lead are properly grounded. Static discharge will probably damage the FET.

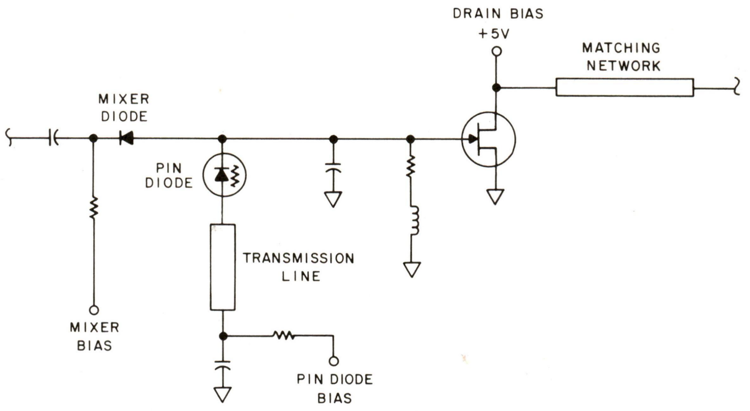

Figure 8-94. A30 First Mixer Assembly, Simplified Schematic

First Mixer Assembly Troubleshooting. To confirm failure of the First Mixer Assembly, check the MIXER BIAS for the internal mixing bands. The exact bias voltage is factory-set for each First Mixer Assembly and FREQUENCY BAND GHz setting, but it should be in the range of −1V to −7V. The PIN DIODE BIAS should read from −4V to −7.5V in the .01−1.8 GHz band, and +20V from 1.7−22 GHz. Troubleshooting of the FET amplifier is not recommended, but the DRAIN BIAS should read +5V. If the bias voltages are not within acceptable limits, check A20 Bias Assembly. If bias voltages are correct, a malfunction of the First Mixer Assembly should be suspected.

A31 YIG-Tuned Oscillator Assembly Ⓜ

A31 YIG-Tuned Oscillator (YTO) Assembly is the first LO in the analyzer. It is a sealed microcircuit which is not field repairable. It is a transistor oscillator containing a yttrium-iron-garnet (YIG) sphere as the resonator. The resonant frequency of the YIG sphere is proportional to the applied magnetic field, which is proportional to the current in two coils: the Main Coil and the Tickler Coil. The coarse TUNING control determines the dc current in the Main Coil, and tunes the oscillator from 2.0 to 4.46 GHz. The FINE tuning control determines the dc current in the Tickler Coil and tunes the oscillator ±0.5 MHz. The sweep ramp is applied to the Main Coil for wide frequency spans (5 MHz/DIV to 500 MHz/DIV). For narrow frequency spans (1 kHz/DIV to 2 MHz/DIV), the sweep ramp is applied to the Tickler Coil. In the stabilized mode (spans of 100 kHz/DIV or less), the YTO locks to a harmonic of the Voltage Controlled Crystal Oscillator (VCXO), which oscillates at 1 MHz. The ERROR signal from this lock loop returns to the YTO Tickler Coil, stabilizing the YTO frequency.

Two pairs of wires connect to the Main Coil. Drive current, from A19 YIG Driver Assembly, flows through one pair. The other pair goes to the YTO Main Coil Filter in the YTF Driver Assembly. When narrow frequency spans (1 kHz/DIV to 2 MHz/DIV) or ZERO SPAN are active, this filter reduces noise in the Main Coil. The YTO requires −10V and +20V, which are applied through a bias board on the YTO. This bias circuit contains resistors to set the proper bias levels, zener diodes to protect the internal YTO circuit from overvoltage, and inductors and capacitors to provide filtering.

RF Switch K3 Ⓝ

RF switch K3, controlled by A13 Relay Driver Assembly, selects the input to A35 Second Converter Assembly. For internal mixing, the output of A30 First Mixer Assembly (either 2050 MHz or 321.4 MHz, as selected by RF switch K1) is selected by K3. For external mixing, 321.4 MHz from the external mixer, is selected.

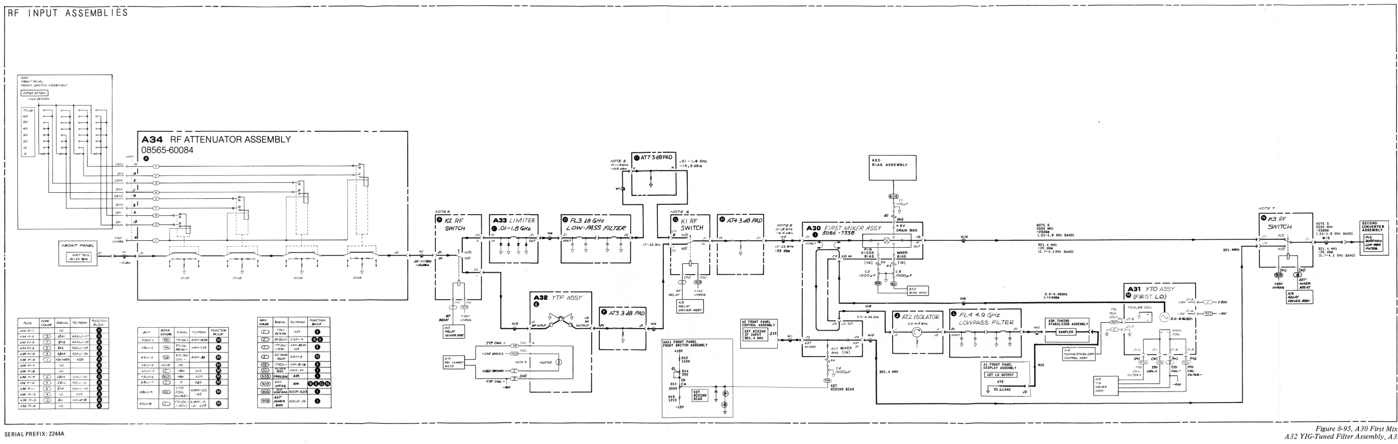

NOTES:

1. REFERENCE DESIGNATORS WITHIN THIS ASSEMBLY ARE ABBREVIATED. FOR COMPLETE DESIGNATOR, PREFIX WITH ASSEMBLY REFERENCE DESIGNATOR.
2. UNLESS OTHERWISE INDICATED:
   RESISTANCE IN OHMS (Ω)
   CAPACITANCE IN MICROFARADS (μF)
   INDUCTANCE IN MICROHENRIES (μH)
3. HEATER NOT USED ON ALL YTF ASSEMBLIES.
4. SIGNAL LEVELS ASSUME FOLLOWING SETTINGS:
   INPUT ATTEN: 0 dB
   FREQ SPAN MODE: ZERO SPAN
   SIGNAL AT ANALYZER INPUT:
   100 MHz, −10 dBm (CAL OUTPUT) FOR .01–1.8 GHz BAND.
   2 GHz, −10 dBm FOR 1.7–4.1 GHz BAND.
   ANALYZER TUNED TO SIGNAL.
5. USE SPECTRUM ANALYZER TO MEASURE POWER LEVELS.
6. ENERGIZED IN .01–1.8 GHz BAND.
7. ENERGIZED IN EXT MIXER BANDS.
8. FREQUENCY BANDS.

FREQUENCY BAND GHZ	BAND LINE	HARMONIC NUMBER	SIGN	IF FREQ MHZ
.01 - 1.8	B1	N=1	-	2050
1.7 - 4.1	B2	N=1	-	321.4
3.8 - 8.5	B3	N=2	-	321.4
5.8 - 12.9	B4	N=3	-	321.4
8.5 - 18	B5	N=4	+	321.4
10.5 - 22	B6	N=5	+	321.4
12.4 - 26.5	B7	N=6	+	321.4
21 - 44	B8	N=10	+	321.4
33 - 71	B9	N=16	+	321.4
53 - 115	B10	N=26	+	321.4

A30,A31, A32,A33, A34

SERIAL PREFIX: 2244A

Figure 8-95. A30 First Mixer Assembly, A31 YIG-Tuned Oscillator Assembly, A32 YIG-Tuned Filter Assembly, A33 Limiter, A34 RF Attenuator, Schematic Diagram

A35 SECOND CONVERTER ASSEMBLY, CIRCUIT DESCRIPTION

A35 Second Converter Assembly includes two subassemblies: A35A1 Second Converter Oscillator Assembly and A35A2 Second Converter Voltage Filter Assembly. The IF signal from A30 First Mixer Assembly passes through the 2050 MHz Low Pass Filter and K5 and K4 coaxial RF switches.

FL2 2050 MHz Low Pass Filter (A)

This filter is primarily used for the .01 – 1.8 GHz FREQUENCY BAND. It allows the 2050 MHz IF signal to pass but filters out higher frequency mixing products that are generated in A30 First Mixer Assembly.

K5 RF Switch and K4 RF Switch (B) (G)

For the .01 – 1.8 GHz FREQUENCY BAND, these two switches route the 2050 MHz IF signal through A35 Second Converter Assembly where the signal is converted down to 321.4 MHz. For the higher internal mixing FREQUENCY BANDS, K5 and K4 RF switches bypass A35 Second Converter Assembly. This bypass is provided in the higher FREQUENCY BANDS because the IF signal from A30 First Mixer Assembly is already at 321.4 MHz.

MP1 Cavity Block (D)

The IF signal from A30 First Mixer Assembly is coupled into the Second Converter bandpass filter through coupling loop A35L1. The bandpass filter consists of three circular, slug-tuned cavity resonators operating at less than quarter wavelength inductive transmission lines. The cavities provide high Q for good selectivity at 2050 MHz. Coupling loops A35L2 and A35L3 couple the cavities. The 2050 MHz signal is loop-coupled to the cathode of the second mixer diode A35CR1.

A35A1 Second Converter Oscillator Assembly (F)

The second local oscillator is a Colpitts type circuit operating at 1728.6 MHz. The capacitive "fingers" etched on the A35A1 Second Converter Oscillator Assembly printed circuit board, and the internal capacitances of A35A1Q1, provide the positive feedback necessary to sustain oscillation of the second LO. The oscillator tank circuit is a slug-tuned cavity, A35C4. The signal from the second LO is coupled into the cavity by a 4-40 machine screw extending down into the cavity. The second LO output is also available at test jack A35J3.

A35A1MP6 Oscillator Housing and Second Converter Cover (E)

The 1728.6 MHz local oscillator provides drive for A35CR1. The difference frequency between the first IF, 2050 MHz, and the second LO frequency, 1728.6 MHz, is 321.4 MHz. This 321.4 MHz signal is coupled through the matching filter to A37 Third Converter Assembly.

The matching filter is a passive network designed to match the relatively high impedance (about 200 ohms) of the second mixer to the low input impedance (about 50 ohms) of A37 Third Converter Assembly. The match may be optimized by adjusting A35L5, 2ND MIXER MATCH.

A35A2 Second Converter Voltage Filter Assembly (C)

The Second Converter Voltage Filter supplies the dc bias to A35A1 Second Converter Oscillator Assembly. The +20V is filtered by A35A2R1 and A35A2C1 and is reduced to about +15V by the drop across A35A2R1. The negative bias voltage (–10V) is filtered through A35A2R2 and A35A2C2. The voltage at the oscillator is approximately –5V.

A35A2Q1 switches the oscillator on or off. When the dc control line SW is at ground, A35A2VR1 is back biased and the transistor is turned on through A35A2R3. To turn off the transistor, SW goes to approximately +26V, which breaks down A35A2VR1 and back biases A35A2CR1, turning A35A2Q1 off.

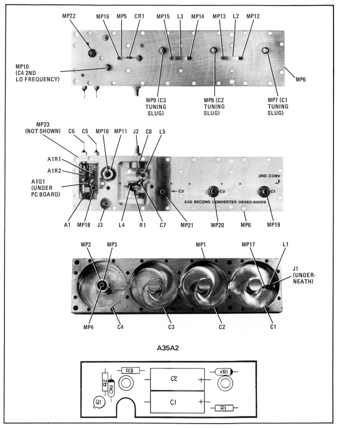

Figure 8-96. A35 Second Converter Assembly, Component Locations

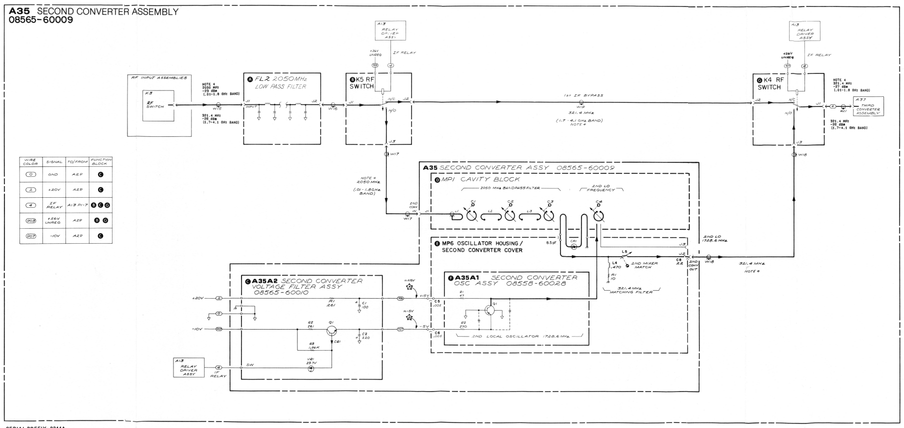

SERIAL PREFIX: 2244A

NOTES

1. REFERENCE DESIGNATORS WITHIN THIS ASSEMBLY ARE ABBREVIATED. FOR COMPLETE DESIGNATOR PREFIX WITH ASSEMBLY REFERENCE DESIGNATOR.

2. UNLESS OTHERWISE INDICATED:
   RESISTANCE IN OHMS (Ω)
   CAPACITANCE IN MICROFARADS (μF)
   INDUCTANCE IN MICROHENRIES (μH)

3. SIGNAL LEVELS ASSUME FOLLOWING SETTINGS:
   INPUT ATTEN: 0 dB
   FREQ SPAN MODE: ZERO SPAN
   SIGNAL AT ANALYZER INPUT 100 MHz, −10 dBm (CAL OUT) FOR .01–1.8 GHz
   2 GHz −10 dBm FOR 1.7–4.1 GHz BAND
   ANALYZER TUNED TO SIGNAL

4. USE SPECTRUM ANALYZER TO MEASURE POWER LEVELS.

A35

Figure 8-97. A35 Second Converter Assembly, Schematic Diagram

A36 TUNING STABILIZER ASSEMBLY, CIRCUIT DESCRIPTION

A36 Tuning Stabilizer Assembly is used only in the AUTO STABILIZER mode, where the YTO (the first LO) is locked to the 1 MHz Voltage-Controlled Crystal Oscillator (VCXO). This assembly comprises three subassemblies: A35A1 Discriminator Assembly, A36A2 VCXO Assembly, and A36A3 Sampler Assembly. Additional control circuitry for the tuning stabilizer operation is in A14 Tuning Stabilizer Control Assembly.

A36A2 VCXO Assembly

Voltage Controlled Crystal Oscillator (VCXO) Ⓐ

The Voltage-Controlled Crystal Oscillator (VCXO) is the 1 MHz reference for the tuning stabilizer circuit. The 1 MHz oscillator is electronically tunable ±750 Hz. The VCXO consists of a high-Q Fixed Frequency Crystal Filter, a Limiting Amplifier, a low-Q LC Variable Frequency Filter, and a Phase-Splitter circuit. The oscillator will oscillate at a frequency such that the phase shift through the two filters is zero. If the Variable Frequency Filter is set by voltage on the varactor diodes to 1 MHz, the phase shift through each filter will be zero and the sum will be zero. If the frequency of the Variable Frequency Filter is set to a frequency different from 1 MHz, the frequency of oscillation will shift such that the phase shift through the Crystal Filter is equal in magnitude, but opposite in sign, to the phase shift through the Variable Frequency Filter. By changing the bias voltage on the varactor diodes, A2CR1 through A2CR4, the oscillator frequency is changed. Since the Q of the Crystal Filter is much greater than the Q of the LC Filter, the frequency stability is on the order of the crystal stability.

The VCXO is tunable over ±750 Hz. This whole tuning range is used only at the low end of the 1.7 – 4.1 GHz band. Approximately ±250 Hz of this range is for moving the VCXO to the lock point as determined by the voltage output from the sample and hold circuit. Depending on how close the YTO frequency is to one of the 1 MHz harmonic lock points, the VCXO will move from 0 to ±250 Hz when stabilized operation is initiated. The FINE tuning control has a range of approximately ±250 Hz, which corresponds to ±0.5 MHz at the YTO. The sweep ramp for a FREQUENCY SPAN/DIV of 100 kHz has a range of ±250 Hz.

An accurate way to measure the VCXO frequency is with the VCXO cover installed. A2TP1 can be accessed through a hole in the cover. An oscilloscope probe that has less than 20 pF capacitance should be used. The frequency thus measured should be 1 MHz ±1 kHz, with peak-to-peak amplitude of 5V to 9V. This scope probe should also be used to measure the signal at A2TP3.

There are four adjustable components in the VCXO circuit (see Tuning Stabilizer Adjustments in Section V). A2C16, 1 MHz PEAK, adjusts the center frequency of the Variable Frequency Filter. A2C2, 1.3 MHz NULL, is adjusted to balance out the capacitance of the crystal holder for A2Y1. A2C3, LINEARITY, adjusts the VCXO circuit to provide a linear frequency change with a linear change in bias voltage to varactor diodes A2CR1 through A2CR4. A2R27, 1 MHz GAIN, is a factory adjustment only. Do not adjust components unless necessary (see Section V).

A2Q2 and A2Q3 may be checked by applying a signal at A2TP1 and observing the output at A2TP3. Disconnect one end of A2C4 and connect a 1 MHz signal from A2TP1 to ground. The voltage at A2TP2 should peak between 4V and 9V when the frequency is varied around 1 MHz. The signal at the emitters of A2Q2 and A2Q3 should be a half-wave rectified sine wave with a positive peak of 2.4 ±0.5V, and with the negative portion clipped at −0.6 ±0.15V.

Quartz crystal A2Y1 can be checked for proper operation using the same test setup as for A2Q2 and A2Q3 above. Connect the oscilloscope to the source of FET A2Q4 and tune the 1 MHz signal source around 1 MHz. The 1 MHz sine wave at the source of A2Q4 should peak at 1 MHz.

VCXO Sweep Varactor Driver Ⓑ . Bias voltage for varactor diodes A2CR1 through A2CR4 is supplied by op amp A2U1. The input to A2U1 is the .4/F VCXO SWP from the Tuning Stabilizer Control Assembly. This signal is an attenuated combination of the TICK ATTEN SWP and FINE TUNE signals and the output of the Sample and Hold circuit in the Tuning Stabilizer Control Assembly. This signal has been attenuated by an amount depending on the YTO frequency. When the analyzer is tuned to the low end of a band, the YTO

frequency is near 2.05 GHz. With the YTO at 2.05 GHz, when locked to the 2050th VCXO harmonic, a frequency shift of 1 Hz at the VCXO will cause a shift of 2050 Hz at the YTO. When the analyzer is tuned to the high end of a band, the YTO frequency is near 4.40 GHz. With the YTO a 4.40 GHz, when locked to the 4400th VCXO harmonic, a frequency shift of 1 Hz at the VCXO will cause a shift of 4400 Hz at the YTO. To correct for the change in frequency shift as the YTO is tuned toward the high end of its range, the input signal to the VCXO must be attenuated.

The nominal tuning sensitivity on the .4/F VCXO line is −300 Hz/V for the 1 MHz fundamental. The nominal tuning sensitivity referred to the YTO frequency is −3.3V/MHz, divided by the YTO frequency in GHz. These sensitivities are for fundamental mixing in the First Mixer Assembly. For the harmonic mixing bands, these sensitivities are divided by the harmonic number N. The .4/F VCXO SWP is summed.with an offset voltage at the negative input of A2U1. A2U1 has an inverted gain of 1.04 for the .4F VCXO SWP signal. THERMISTOR A2RT1 varies the offset as a function of temperature to compensate for the temperature dependence of the varactors A2CR1 through A2CR4.

Pulse Amplifier Ⓒ . The Pulse Amplifier converts the 1 MHz signal (±750 Hz) from the VCXO to a square wave pulse of sufficient amplitude to drive the mixer diode in the Sampler Assembly. The positive portion of the 1 MHz sine wave from the VCXO turns on A2Q5. The output of A2Q5 goes from +20V when it is turned off to near 0V when it is on. The +20VF2 voltage is switched off, disabling the Pulse Amplifier, when the analyzer is not in the AUTO STABILIZER mode. A2R23, A2R24, and A2CR9 provide for the same power dissipation whether +20VF2 is off or on; this minimizes VCXO drift when the stabilizer is turned on after a period of analyzer operation with the stabilizer off. The pulse from A2Q5 is capacitively coupled to A2Q6, where it is inverted, giving an output at the collector of A2Q6 of −10V when off to near 0V when on. This signal is coupled into the Step Recovery Diode Driver A2Q7, whose output (TPD) is approximately a square wave of 1 MHz going from −10V when on to +0.7V when off. The positive portion of the output pulse is clamped at this level by the sampler diode (not shown) in the Sampler Assembly.

A36A3 Sampler Assembly

Sampler Ⓓ . The Sampler mixes the 2.00 to 4.46 GHz signal from the YTO first LO with the harmonics from the 1 MHz VCXO and produces sum and difference output signals for the Discriminator Assembly. The YTO signal is routed through the First Mixer Assembly and 4.9 GHz Low Pass Filter FL4 before being applied to the Sampler. The YTO signal fed through the Sampler is terminated by a 50-ohm load at the rear-panel 1ST LO OUTPUT. The 1 MHz square wave from the VCXO Pulse Amplifier drives a step recovery diode in a differentiator circuit to produce a 1 MHz pulse train: a series of 1 MHz harmonics extending through 4.5 GHz. The Sampler mixes the 2460 harmonics between 2.00 and 4.46 GHz with the 2.00 to 4.46 GHz YTO signal. The output is amplified, then filtered through a 500 kHz Low Pass Filter and applied to a 240 kHz Discriminator. The output of the Discriminator is fed back as the ERROR signal to the Tuning Stabilizer Control Assembly, locking the YTO frequency to a VCXO harmonic. Immediately after the YTO is stabilized, the output from the Discriminator is 0V and the YTO frequency is offset from the nearest VCXO harmonic by approximately 240 kHz.

To check the Sampler, place the instrument in the stabilized mode and observe the voltage at TPD with an oscilloscope. The signal should be a 1 MHz square wave between −10 ±1V and +0.7 ±0.2V with a frequency of 1 MHz ±10 kHz. If the waveform at TPD has an upper limit approaching +20V, check for an open A2W1 Cable or open Sampler Assembly step recovery diode. The sampler diode may be checked by inserting a wire in the pulse input connector J3 and checking the diode with an ohm-meter. Using an HP 412A Volt-Ohm-Ammeter, on the 100-ohm range, the diode should indicate 100 to 500 ohms with the positive probe to the center conductor and the negative probe to ground. The ohmmeter should indicate greater than 1 megohm in the reverse direction.

NOTE

Other ohmmeters may give different resistance measurements. The actual value depends on the voltage of the ohmmeter.

If the voltage at measurement point D is zero, check for a shorted cable or a shorted Sampler Assembly step recovery diode by the above test.

A36A1 Discriminator Assembly

Tuning Stabilizer Preamplifier (E) . The Sampler Assembly output is amplified in the Tuning Stabilizer Preamplifier before it is applied to the 500 kHz Low Pass Filter. The Sampler output signal at measurement point A is a +1.8V to +2.4V dc level with the various output signals from the Sampler Assembly superimposed on the dc signal. A1Q1 and A1Q2 are connected as a FET-input cascade stage which has a high input impedance. A1Q3 is a common emitter output stage.

+5V Regulator (F) . This circuit has a +10V input and a +5V output. A1CR3 puts +5.6V on the base of A1Q10, which in an emitter-follower configuration has a +5V output at its emitter.

500 kHz Low Pass Filter (G) . This is a 500 kHz Chebychev low pass filter. The filter rejects the 1 MHz sampling signal and the unwanted sideband from the Sampler Assembly. The output at measurement point B is approximately −1 Vdc with a 0.25V peak-to-peak 240 kHz sine wave.

Emitter Follower Buffer Amplifier (H) . A1Q4 and A1Q5 are emitter followers connected to terminate the 500 kHz low pass filter in 1000 ohms and to provide a low output impedance to drive the Fixed Phase Differential Comparator and the Variable Phase Differential Comparator.

Fixed Phase Differential Comparator (I) and Variable Phase Differential Comparator (J) . A2L4, A1C11, and A1C12* form a series resonant circuit whose Q is determined primarily by A1R14* and the resistance of A1L4. The values of A1C12* and A1R14* are factory selected to set the frequency and Q of the 240 kHz resonant circuit.

A1U1 is a transistor array consisting of five identical transistors in a 14-pin integrated circuit package. Transistors in A1U1, A1Q6, and A1Q7 make up two independent differential comparators. The differential comparators convert the sine wave input into a square wave output. The phase difference between the two square waves is a function of the input frequency. The outputs are nearly in phase at low frequencies, 90 degrees out of phase at 240 kHz, and nearly opposite phase at 500 kHz. These outputs go into an EXCLUSIVE OR circuit (see Figures 8-98 and 8-99).

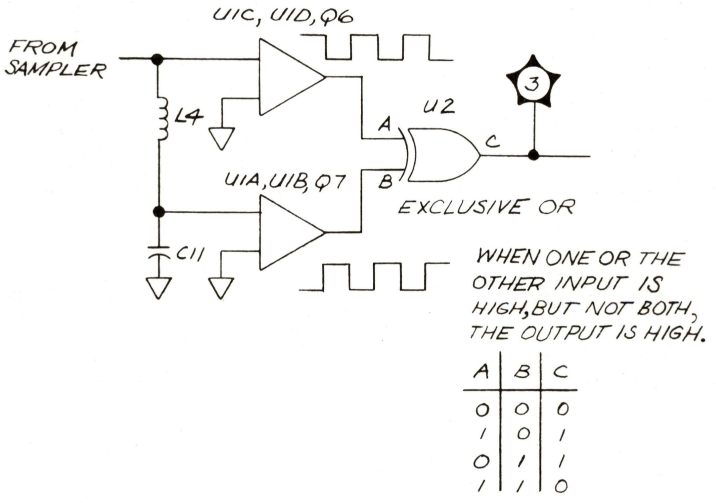

Figure 8-98. 240 kHz Discriminator, Simplified Schematic

EXCLUSIVE OR (K) . Quad NAND gate integrated circuit A1U2 is connected as an EXCLUSIVE OR circuit. Its output is high when the two inputs are different, and low when they are the same. The output of the EXCLUSIVE OR circuit at A1TP3 has a dc component with an average value that is a function of frequency (see Figure 8-99).

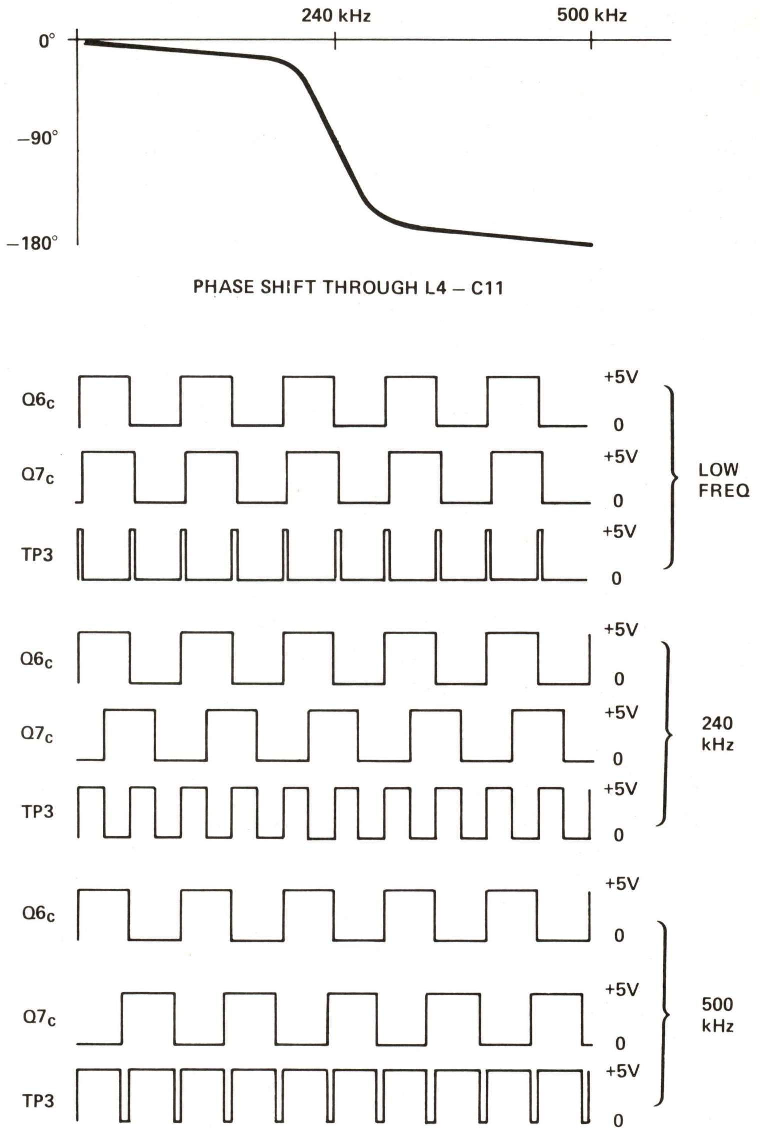

Figure 8-99. Discriminator Wave Shapes

Pulse Width Controlled Voltage Generator Ⓛ. The output of the EXCLUSIVE OR circuit is buffered, offset and filtered by A1Q9, A1Q8, and associated circuitry. Q9 and Q8 are connected as a dc-coupled differential amplifier. The error output signal is a dc voltage related to frequency as indicated in Figure 8-100. Immediately after the YTO (first LO) is stabilized, the ERROR signal will be approximately 0 Vdc. Now if the YTO increases in frequency because of drift or noise, the ERROR signal will go negative and bring the YTO back to very nearly the same frequency. If the YTO decreases in frequency, the ERROR signal will go positive. Slightly tuning the coarse TUNING control will have the same effect. R30 and C17 constitute a low pass filter.

DISCRIMINATOR ASSEMBLY TESTING

The operation of the Discriminator Assembly can be tested as follows:

Disconnect 958 wire (ERROR out) from C4. Set AUTO STABILIZER switch OFF.

Connect a 13 mV peak-to-peak, 10 to 700 kHz signal from measurement point A to chassis ground. (It is not necessary to disconnect the Sampler Assembly.)

Vary the frequency of the oscillator while observing the discriminator ERROR output at C4. The discriminator output should vary as shown in Figure 8-100. If the correct output is not obtained, perform the following tests with the oscillator still connected to measurement point A.

The signal at A1TP1 should be a sine wave, 0.15V to 0.3V peak-to-peak, for frequencies between 1 and 500 kHz. The voltage level should decrease rapidly as the frequency is increased above 500 kHz. Observe signals at collectors of A1Q6 and A1Q7 with a dual-channel oscilloscope. The signals should be 0 to +5V square waves. As the oscillator frequency is varied, the phase relationship of the square waves should vary as follows: at low frequency, the square waves should be almost in phase; at 240 kHz they should be approximately 90 degrees out of phase; at frequencies approaching 500 kHz they should be nearly 180 degrees out of phase. Also note how the average value of the EXCLUSIVE OR output at A1TP3 increases as the oscillator frequency is increased (see Figure 8-99).

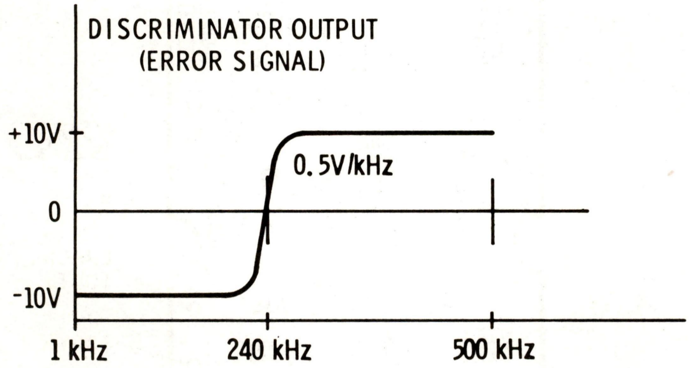

Figure 8-100. Discriminator Output ERROR Signal

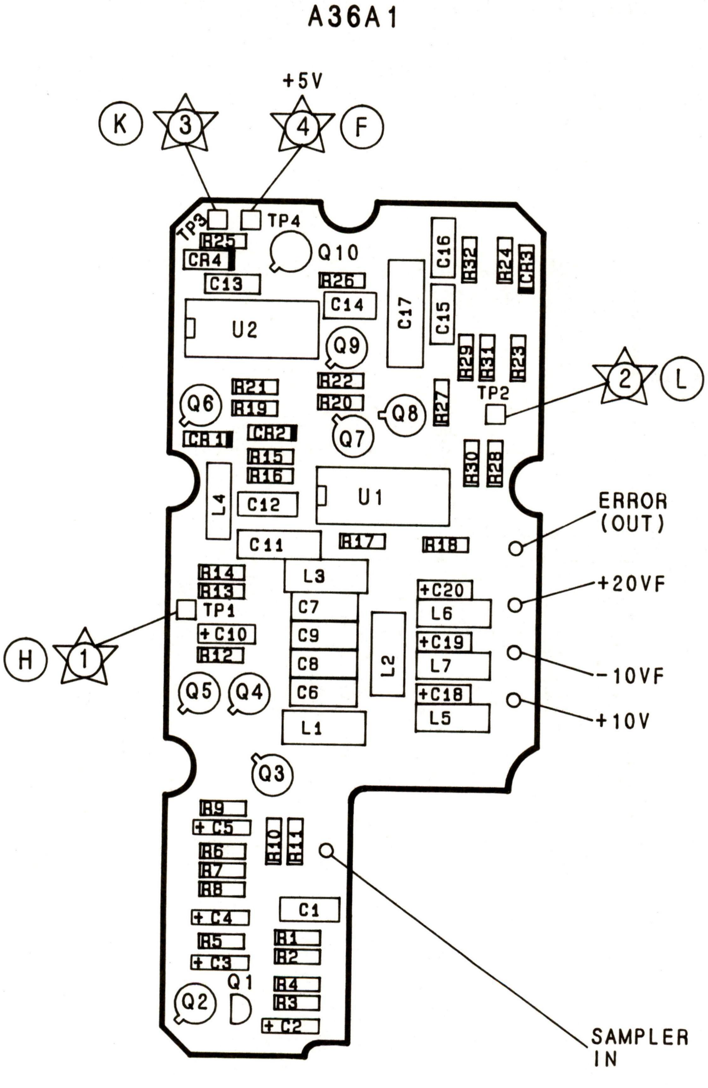

Figure 8-101. A36A1 Discriminator Assembly, Component Locations

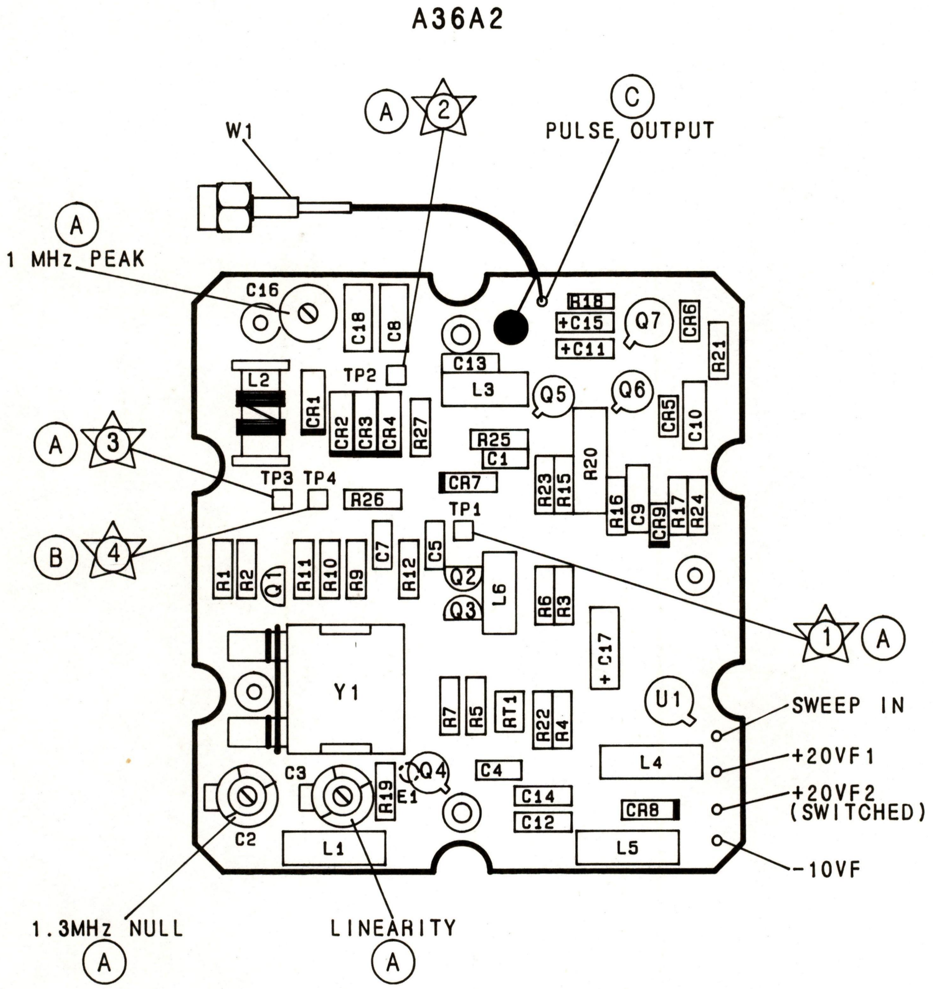

Figure 8-102. A36A2 VCXO Assembly, Component Locations

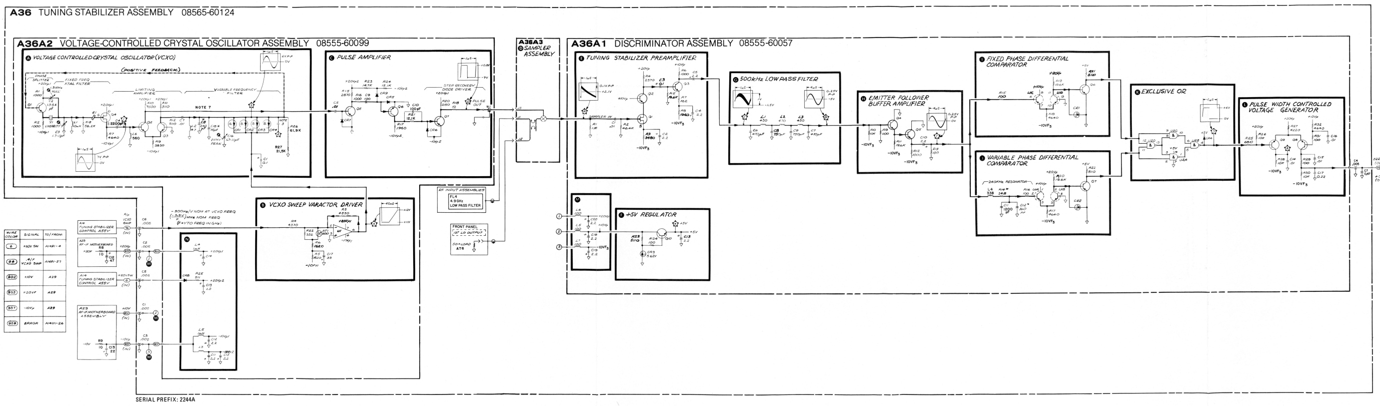

NOTES

1. REFERENCE DESIGNATORS WITHIN THIS ASSEMBLY ARE ABBREVIATED. FOR COMPLETE DESIGNATOR, PREFIX WITH ASSEMBLY REFERENCE DESIGNATOR.
2. UNLESS OTHERWISE INDICATED: RESISTANCE IN OHMS (Ω) CAPACITANCE IN MICROFARADS (μF) INDUCTANCE IN MICROHENRIES (μH)
3. TEST POINT (2) COUPLED VIA TRACE CAPACITANCE.
4. * ASTERISK DENOTES FACTORY SELECTED COMPONENT. NOMINAL VALUE SHOWN.
5. TEST POINT WAVEFORMS ASSUME FOLLOWING SETTINGS: GREEN (NORMAL) SETTINGS FREQUENCY SPAN/DIV: 100 kHz FREQUENCY BAND: 1.7–4.1 GHz FREQUENCY: 3.000 GHz AUTO STABILIZER: ON FINE TUNING: CENTERED
6. —⧄— INDICATES SHIELDING BEAD.
7. ALTERNATE A36A2C8* IS HP PART NO. 0160-5115, GLASS, 270 pF.

A36

Figure 8-103. A36 Tuning Stabilizer Assembly, Schematic Diagram

A37 THIRD CONVERTER ASSEMBLY, CIRCUIT DESCRIPTION

A37 Third Converter Assembly amplifies and converts the 321.4 MHz from coax switch K4 down to 21.4 MHz. The conversion gain in A37 Third Converter Assembly is approximately 11 dB. A37 Third Converter Assembly produces the −10 dBm, 100 MHz CAL OUTPUT signal, and also contains circuitry for signal identification. Figure 8-104 shows a simplified block diagram of this assembly.

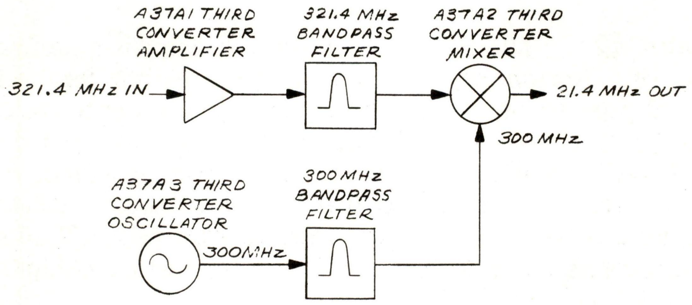

Figure 8-104. A37 Third Converter Assembly, Simplified Block Diagram

A37A1 Third Converter Amplifier (A)

The Third Converter Amplifier provides a broad-band fixed gain of approximately 20 dB to the incoming 321.4 MHz IF signal. The amplifier is a single-stage, common-emitter transistor amplifier whose gain is determined by the high-frequency characteristics of A1Q1, input matching capacitor A1C1, and the output matching elements A1L1, A1R5, and A1C6. Also included is a 700 MHz low-pass filter consisting of two shunt transmission line capacitors and two series transmission line inductors. This low-pass filter attenuates the first LO feedthrough to prevent overloading of the amplifier when the first LO is tuned to approximately 2050 MHz and below.

Bias to the RF amplifier transistor A1Q1 is provided by A1Q2 and A1R1 through A1R4. Note that Q2 and associated components are decoupled from the RF signal by A1C4 and A1C5.

321.4 MHz Bandpass Filter (C)

The 321.4 MHz Bandpass Filter limits the signal power applied to the Third Converter Mixer to a 3 dB bandwidth of about 7 MHz centered at 321.4 MHz. It uses four helical resonators which are tap-coupled at the input and output, and slot-coupled to each other. The resonators are capacitively tuned by tuning slugs C1 through C4. J5 provides a test port for filter alignment.

A37A2 Third Converter Mixer (H)

The Third Mixer converts the IF signal from the 321.4 MHz Bandpass Filter to 21.4 MHz, using the signal from the 300 MHz Bandpass Filter as the local oscillator. The Third Converter Mixer is an unbalanced, triple-tuned mixer. The 321.4 MHz input signal is fed to mixer diodes A2CR1 and A2CR2. It is switched on and off to the 21.4 MHz output at a 300 MHz rate by the 300 MHz local oscillator signal. A2CR1 and A2CR2 are used in parallel to reduce resistance when the diodes are on. Output matching network A2L1 through A2L3 and A2C12 transforms the impedance seen at the cathodes of A2CR1 and A2CR2 to approximately 50Ω. It also provides an open circuit for the 321.4 MHz IF signal and 300 MHz local oscillator signal.

The mixer is triple-tuned in the sense that power from any one of the three signals present in the mixer (321.4 MHz, 300 MHz, and 21.4 MHz) cannot be lost in a port that is used for the other two signals. For example, 321.4 MHz power cannot be directly lost out the 21.4 MHz port, because L2 is essentially an open circuit at 321.4 MHz; nor can it be lost out the 300 MHz LO port, because the 300 MHz Bandpass Filter is reflective at 321.4 MHz.

A37A3 Third Converter Oscillator

The Third Converter Oscillator contains a 100 MHz Crystal Oscillator. This oscillator drives a Frequency Tripler, which amplifies and triples the 100 MHz signal, producing a high level 300 MHz signal. This 300 MHz signal drives the Third Converter Mixer. The Limiter provides an amplitude-stable, temperature-compensated −10 dBm signal. This signal is filtered by the 150 MHz Low-pass Filter to remove harmonics produced in the Limiter. The Regulator provides dc bias voltages to the 100 MHz crystal oscillator and limiter.

100 MHz Crystal Oscillator Ⓓ . The 100 MHz Crystal Oscillator is a grounded-base Colpitts oscillator which uses a series resonant, fifth overtone crystal in the collector to emitter feedback path to achieve frequency stability and low noise. A3Q2 provides unity current gain from the emitter to the collector. The current at the collector is transformed up by tank circuit A3L4, A3C12, and A3C13, and then fed back to the emitter through series resonant crystal A3Y1, A3Y2, or A3Y3 and associated PIN switching diode A3CR1, A3CR2, or A3CR3. The tank circuit is a frequency-selective transformer that also prevents the oscillator from oscillating at other overtones of the crystal. Output power is tapped out of the tank through A3C14 to resistive network A3R19 through A3R22. This network distributes the output power and provides a constant load to the oscillator.

The 100 MHz Crystal Oscillator can oscillate at the series resonance of either of the three crystals A3Y1, A3Y2, or A3Y3. In normal operation, control line F3 is pulled down to approximately 0V, turning on PIN diode A3CR2, to provide an RF feedback path through A3Y2. Control lines F3− and F3+ are open, and pull-up resistors A3R13 and A3R15 back bias A3CR1 and A3CR3, keeping them off to open the RF feedback paths through A3Y1 and A3Y3. During Signal Identifier operation, control line F3 is switched between 0V and +20V on alternate sweeps; when F3 is at 0V, F3− or F3+ (depending on bandwidth selected) is at 0V. This moves the frequency of the Crystal Oscillator from 100 MHz (F3 at 0V) to 99.33 MHz (F3− at 0V) or 100.67 MHz (F3+ at 0V). Since the signal frequency from the Crystal Oscillator is multiplied by 3 in the Tripler before it is used as a local oscillator to drive the Third Converter Mixer, the local oscillator for the Third Converter Mixer can be switched from 300 MHz (F3) to 298 MHz (F3−) or 302 MHz (F3+).

Bad crystals (or associated bias components) can be easily identified by unsoldering incoming control wires to F3−, F3, and F3+. If the oscillator will not oscillate with one of the control lines grounded but does oscillate with either of the other two grounded, then the crystal, or one of the associated bias components, is probably faulty. Try to restore oscillation by retuning A3L4 and then tapping or moving components in the tank circuit.

Tripler Ⓔ . The Tripler contains a 100 MHz linear, common-emitter amplifier, A3Q1, which provides approximately 20 dB of gain. A3Q1 drives a Class C common-emitter amplifier/tripler, A3Q3. Matching elements A3C4, A3C5, and A3L2 tune the collector of A3Q1 and the base of A3Q3 to 100 MHz. The collector of A3Q3 is tuned to 300 MHz by A3L3 and the following 300 MHz Bandpass Filter.

Note that with no or low RF signal driving the Frequency Tripler, A3Q3 is off; dc voltages at TPF and A3TP3 will be incorrect.

Limiter Ⓕ . The Limiter is a two-stage amplifier, using emitter-coupled transistor pairs for each amplifier stage. Each stage limits the incoming 100 MHz signal by overdriving the base of the input transistor to a point where the grounded base output transistor, Q3, switches from zero collector current, when the base of the input transistor is driven positive, to the full bias current, when the base of the input transistor is driven negative. Schottky-Barrier diodes A3CR4 and A3CR5 further limit the output of the first stage to prevent overdriving the second stage. Both amplifier stages are biased with constant emitter current for each pair by current source transistors A3U1B and A3U1E. All six transistors A3U1A through A3U1E are contained in a 10-pin integrated circuit which helps improve performance by reducing stray capacitance and lead length inductance.

Proper overall operation of the limiter can be checked by monitoring both the front-panel CAL OUTPUT and the 100 MHz test output J4 while detuning A3L4 OSC PEAK in the 100 MHz Crystal Oscillator. As A3L4 is detuned, the power at the 100 MHz test port J3 will decrease. If the Limiter is operating properly, the front-panel CAL OUTPUT level should change less than 0.1 dB for a 10 dB change in the 100 MHz test output.

150 MHz Low-Pass Filter Ⓘ. The 150 MHz Low-Pass Filter attenuates the harmonics present at the output of the Limiter. This filter is based on a five-element, 0.01 dB ripple, Chebychev design with a 3 dB cutoff frequency of 150 MHz. If the Limiter and the 150 MHz Low-Pass Filter are operating properly, the second and higher 100 MHz harmonics will be attenuated by greater than 30 dB.

Regulator Ⓑ. The Regulator is a resistive divider and emitter follower that furnishes dc bias voltages to the 100 MHz Oscillator and to the Limiter.

300 MHz Bandpass Filter Ⓖ. The 300 MHz Bandpass Filter rejects all 100 MHz harmonics except the third produced in the Frequency Tripler. Its operation is the same as the 321.4 MHz Bandpass Filter.

A37 THIRD CONVERTER ASSEMBLY TROUBLESHOOTING

Proper operation of the A37 Third Converter Assembly can usually be verified by checking the conversion gain from 321.4 MHz to 21.4 MHz as called by signal levels on the schematic. If the conversion gain is low but the 100 MHz signals at the front panel CAL OUTPUT and 100 MHz test port J3 are correct, the internal signal levels in A37 Third Converter Assembly should be measured. To do this, the helical resonators must remain covered or they will be mistuned. This can be accomplished by first removing A37 Third Converter Assembly cover and tilting the assembly out from the instrument. To prevent shorts, place tape over A3Q4 and A3U1. Then reinstall the cover wrong side out, with silk-screen markings and mesh gasket against the housing, and side of cover over the helical resonators. Replace the 14 screws holding cover and gasket in place over the helical resonators. When this is complete, the inputs and outputs of the helical resonators, the Third Converter Amplifier, the Third Converter Mixer, the Tripler, and the 100 MHz Crystal Oscillator will all be exposed. The helical resonators will not require adjustment.

The RF signal levels inside A37 Third Converter Assembly can now be checked with another spectrum analyzer and a 500Ω 10:1 resistive divider probe such as the 10020A. If such a probe is not available, a satisfactory substitute can be made from a BNC female connector and a 464-ohm, 1/8-watt resistor (see Figure 8-105). The spectrum analyzer should be used with the input attenuator set to 10 dB or greater for input protection and to provide a good 50-ohm load for the divider.

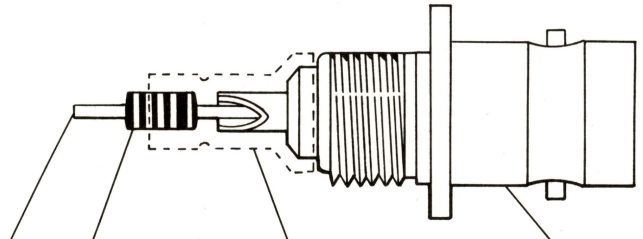

Figure 8-105. Substitute Divider Probe

The signal levels called out in the schematic can be traced with the probe and should read within ±2 dB of indicated levels. Care must be taken to identify the proper signal frequencies on the spectrum analyzer display. Signal level readings at measurement points A, B, C, F, and H and at J1 and J2 must be taken with the case of the probe grounded directly to A37 Third Converter Assembly housing or cover. Measurements at other test points can be made with the probe case ungrounded.

Note that a 321.4 MHz, −30 dBm signal from an external signal source can be applied to J1 in place of the internal signal from K5J1. This may be necessary if the signal peak cannot be found when tuning the HP 8569B.

If the conversion gain is low and the 100 MHz signal at test port J3 is low or nonexistent, or the front-panel CAL OUTPUT signal is low or nonexistent, then the Third Converter Oscillator should be inspected. This can be done by removing the cover and leaving A37 Third Converter Assembly housing in place. Note that the helical resonators will be uncovered and therefore mistuned, so RF signal levels at measurement points A, B, C, F, and H and at J2 will be incorrect. However, removal of the cover will allow access to the components of the Limiter.

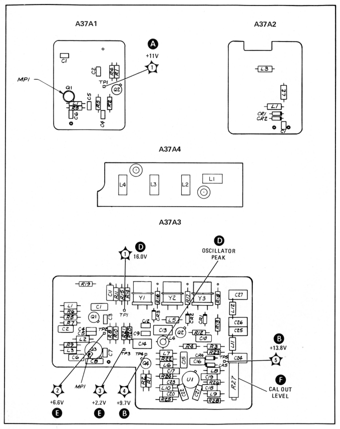

Figure 8-106, A37 Third Converter Assembly, Component Locations

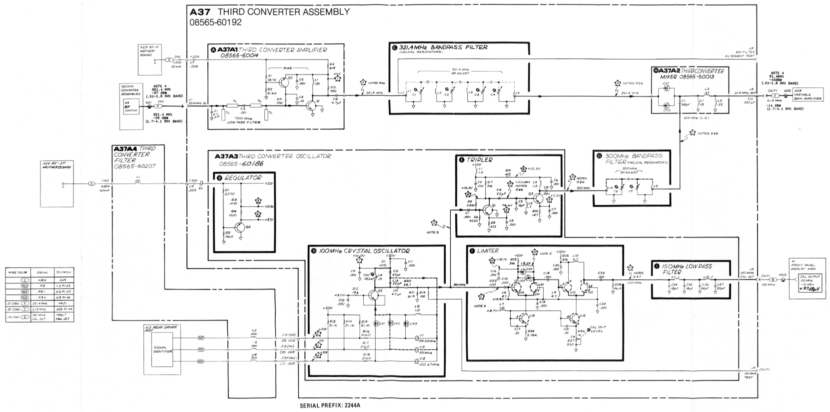

NOTES

1. REFERENCE DESIGNATORS WITHIN THIS ASSEMBLY ARE ABBREVIATED. FOR COMPLETE DESIGNATOR PREFIX WITH ASSEMBLY REFERENCE DESIGNATOR.
2. UNLESS OTHERWISE INDICATED: RESISTANCE IN OHMS (Ω) CAPACITANCE IN MICROFARADS (μF) INDUCTANCE IN MICROHENRIES (μH)
3. TRANSMISSION LINES ARE SHOWN AS FOLLOWS:
4. SIGNAL LEVELS ASSUME FOLLOWING SETTINGS:
   GREEN (NORMAL) SETTINGS
   INPUT ATTEN: 0 dB
   FREQUENCY SPAN MODE: ZERO SPAN
   100 MHz −10 dBm (CAL OUTPUT) SIGNAL ANALYZER INPUT
   ANALYZER TUNED TO SIGNAL
5. INTERNAL RF SIGNAL LEVELS ARE MEASURED USING A SPECTRUM ANALYZER WITH A 10:1 (20 dB) RESISTIVE DIVIDER PROBE (500 OHM INPUT IMPEDANCE). ADD 20 dB TO SPECTRUM ANALYZER READINGS TO OBTAIN THE LEVEL AT THE PROBE TIP.
6. COVER (UPSIDE DOWN TO MAKE TEST POINTS ACCESSIBLE) MUST BE IN PLACE OVER HELICAL RESONATORS.
7. SIGNAL LEVEL AT MEASUREMENT POINT MEASURED WITH 50 OHM LOAD ON FRONT PANEL CAL OUTPUT.

A37

Figure 8-107, A37 Third Converter Assembly, Schematic Diagram

A40 POWER SUPPLY ASSEMBLY, CIRCUIT DESCRIPTION

A40 Power Supply Assembly is made up of two subassemblies: A40A1 Rectifier Assembly and A40A2 Regulator Assembly. A40A1 Rectifier Assembly converts the voltages from the transformer secondary to unregulated dc voltages. These unregulated voltages are then regulated and distributed to the rest of the instrument by A40A2 Regulator Assembly.

There are nine regulated voltages (+5.2V, ±10V, ±15V, +20V, +30V, −40V, +158V) and one unregulated voltage (+26V UNREG). The regulated voltages are referenced to a +15V reference supply. A40A1 Rectifier Assembly contains the rectifiers for the +5.2V, ±15V, +20V, and −40V supplies. The +30V and +158V rectifiers are located in the A40A2 Regulator Assembly. The ±10V supplies are derived from the regulated ±15V supplied.

A40A1 Rectifier Assembly

Line voltage passes from the Line Module Assembly FL1 through the Line Voltage Selector Card TB1 and Transformer T1 to A40A1 Rectifier Assembly. C1, C2, and C3 reduce conducted radio-frequency interference (RFI).

+5.2V Rectifier Ⓐ. This full-wave rectifier consists of CR1, CR2, CR19, and CR20. Filtering is by C7. R1 acts as a bleeder resistor for C7 when the supply is shut off. C6 filters the diode switching transients and C1 reduces the conducted RFI.

+15V Rectifier Ⓑ. The +15V Rectifier is a full-wave bridge rectifier made up of CR3, CR4, CR5, and CR6. The ac ripple is filtered by C9, and the switching transients by C8. R2 is the bleeder resistor for C9, and C2 is used to reduce the conducted RFI.

−15V, +20V, and −40V Rectifiers Ⓒ Ⓓ Ⓔ. The −15V, +20V, and −40V rectifiers are similar to the +15V rectifier. In addition, the −40V rectifier has overvoltage protection which will short the transformer and blow the line fuse whenever the line voltage is above the line module setting. For example, if the line module is set for +120V and the instrument is plugged into a 240V outlet, VR1 will begin to conduct and turn on Q1. This will short the transformer secondary and blow the line fuse.

A40A2 Regulator Assembly

+15V Reference Supply Ⓑ. The +15V reference voltage is derived from the +6.2V reference zener diode VR3. This voltage is filtered by R15 and C18 and then amplified by U4 to +15V. The +15V output is fed back and applied to the inverting input of U4 through the voltage divider R16, R17, and R18. R17 adjusts the gain for +15V ±0.005V out. C2 decreases the gain to unity at line frequencies for less ripple.

When first turned on, the output voltage of some op amps will rise with their positive supply voltages before beginning to regulate. This can cause the reference voltage to rise above +15V, which would trigger the overvoltage protection of the supplies (crowbar). To prevent this, VR2 is used to supply positive feedback, which prevents the output from going above about 13V before U4 goes into regulation. R14 supplies bias current to VR3, and R85 increases the available output current.

+5.2V Supply Ⓗ. There are four main elements to the supply: the error amplifier U1, R54, and R55; the series regulator Q1; the current limit R56, R57, R58, and Q11; and the overvoltage protection VR11, R60, and Q10. U1 compares the output (regulated) voltage +5.2V with the reference voltage +5.2V (derived from the +15V REF through the resistor divider R54 and R55) and applies base drive to the series pass transistor Q1 to regulate the output voltage.

The current limit is set by the voltage developed across R56 by the output current. As the output current increases, the voltage drop across R56 increases, which raises the voltage at the base of Q1. This also raises the voltage at the base of Q11 through the resistor divider R57 and R58. As the output current increases, Q11 begins to turn on and shunt the base drive of Q1 to the output. This starves the series regulator Q1, which lowers the

output voltage and limits the output current. This circuit is a foldback current limiter which has less current at short circuit than at its maximum current capability.

Overvoltage protection is enabled whenever the output voltage is high enough to forward bias VR11. This turns on the SCR Q10, which shunts the output and causes the supply to current limit. C11 and R56 roll off the gain to prevent oscillation, and CR27 protects the Q1 base-to-emitter junction from reverse breakdown. The LED DS6 is biased by R59 and turns on when the power supply is on. CR30 provides reverse voltage protection.

+10V, −10V, +15V, −15V, +20V, +30V, and −40V Supplies I J D E A G F. The other supplies, except for the +158V Supply, operate similarly to the +5.2V Supply. The −40V and +30V Supplies have additional circuitry that limits the voltage supplied to the error amplifiers U2 and U9.

The −40V unregulated voltage is too high to supply U2 directly without damaging it. Q12 is used to limit the supply current, and VR6, VR7, and VR17 limit the voltage across U2 during high-power line operation and whenever the output of the supply is shorted. R34 supplies Q2 with the base drive during start up.

In the +30V Supply, VR14 keeps the output of U9 pin 6 from going below the negative terminal (pin 4) when the output of the supply is shorted. Q27 limits the output current of U9, and VR15 limits the voltage across its supply terminals. CR44, C17, R80, C16, and C15 form the rectifier for the +30V unregulated voltage. The resistor divider, R83 and R84, samples the line voltage from the transformer secondary. This voltage is sent to the Sweep Generator Assembly when the LINE mode of the SWEEP TRIGGER is selected.

The +26V UNREG voltage is tapped off from the input to the +20V Supply.

+158V Supply C. The +158V Supply is similar to the others except for the manner in which the error amplifier controls the series regulator.

Q31 acts as a constant current source (~5 mA) set by CR21, CR22, and R41 (see Figure 8-108). This current is either fed as base drive to the series regulator Q9 or shunted to ground by U10 through Q29. The base voltage of Q29 is fixed by the voltage divider R42 and R44. This enables U10 to control the base current to Q9 by regulating the current through Q29. CR23 helps to quickly bring U10 into regulation and to prevent the output voltage from overshooting on start up. C6, R43, C7, and C10 prevent the output voltage from overshooting and triggering the overvoltage protection circuit after the removal of a short at the output.

Q28, R47, R48, and R50 form the current limiting circuit. VR9, VR10, R52, and Q30 form the overvoltage protection. C9 and R47 roll off the gain to prevent oscillation. DS5 is biased on by R51 to indicate when the supply is on.

CR26, C8, R40, C21, and C22 make up the rectifier, which is similar to the other full-wave bridge rectifiers except that the four-diode bridge is one package, CR26.

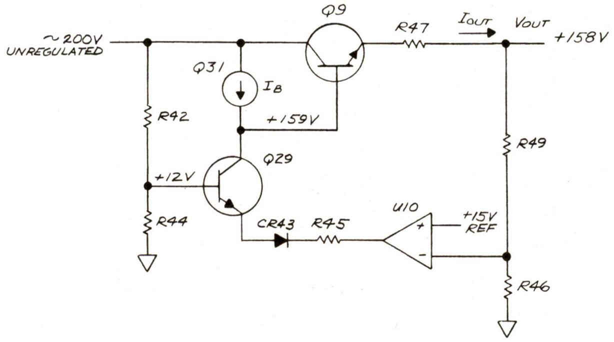

Figure 8-108. +158V Regulator Circuit, Simplified Schematic

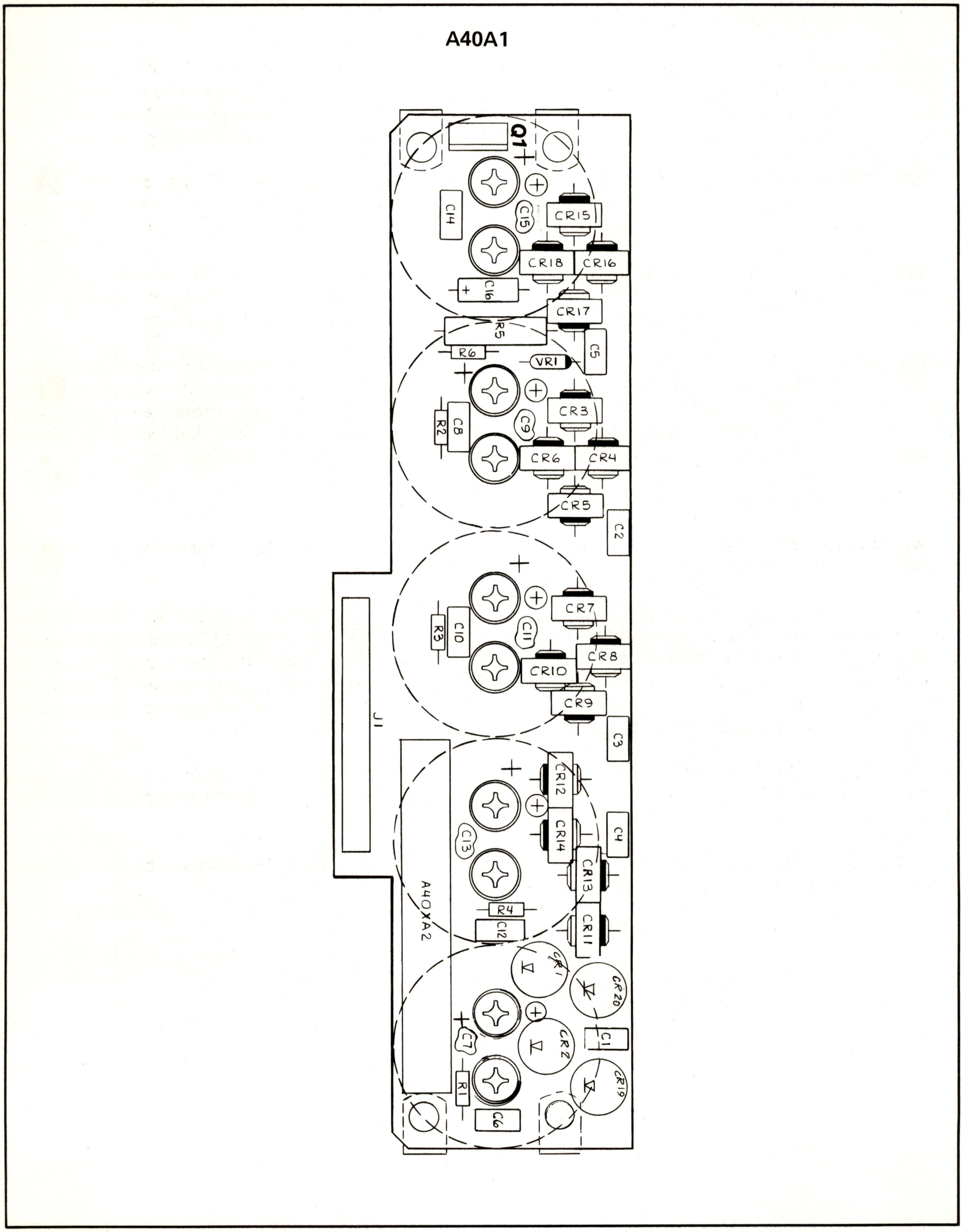

Figure 8-109. A40A1 Rectifier Assembly, Component Locations

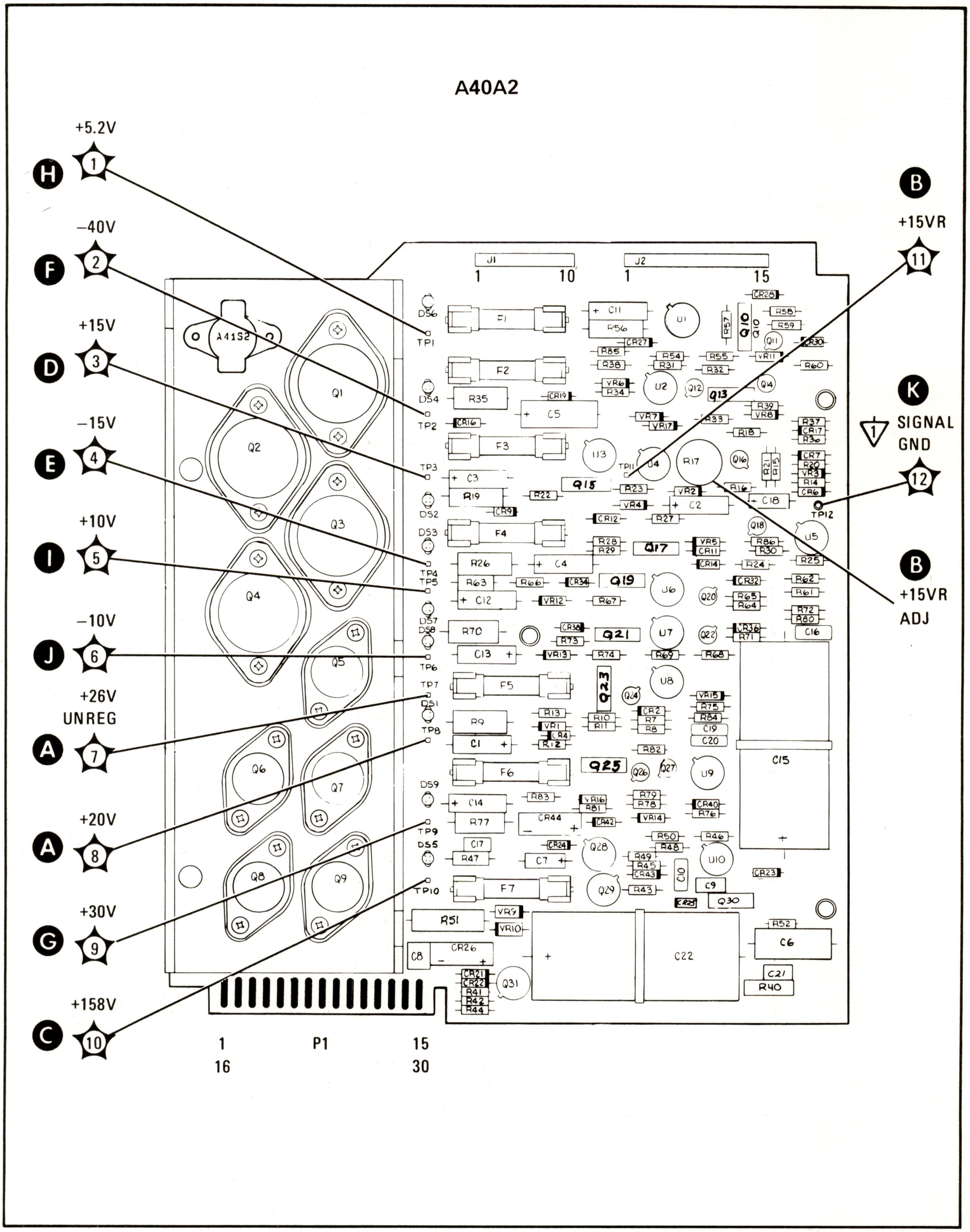

Figure 8-110. A40A2 Regulator Assembly, Component Locations

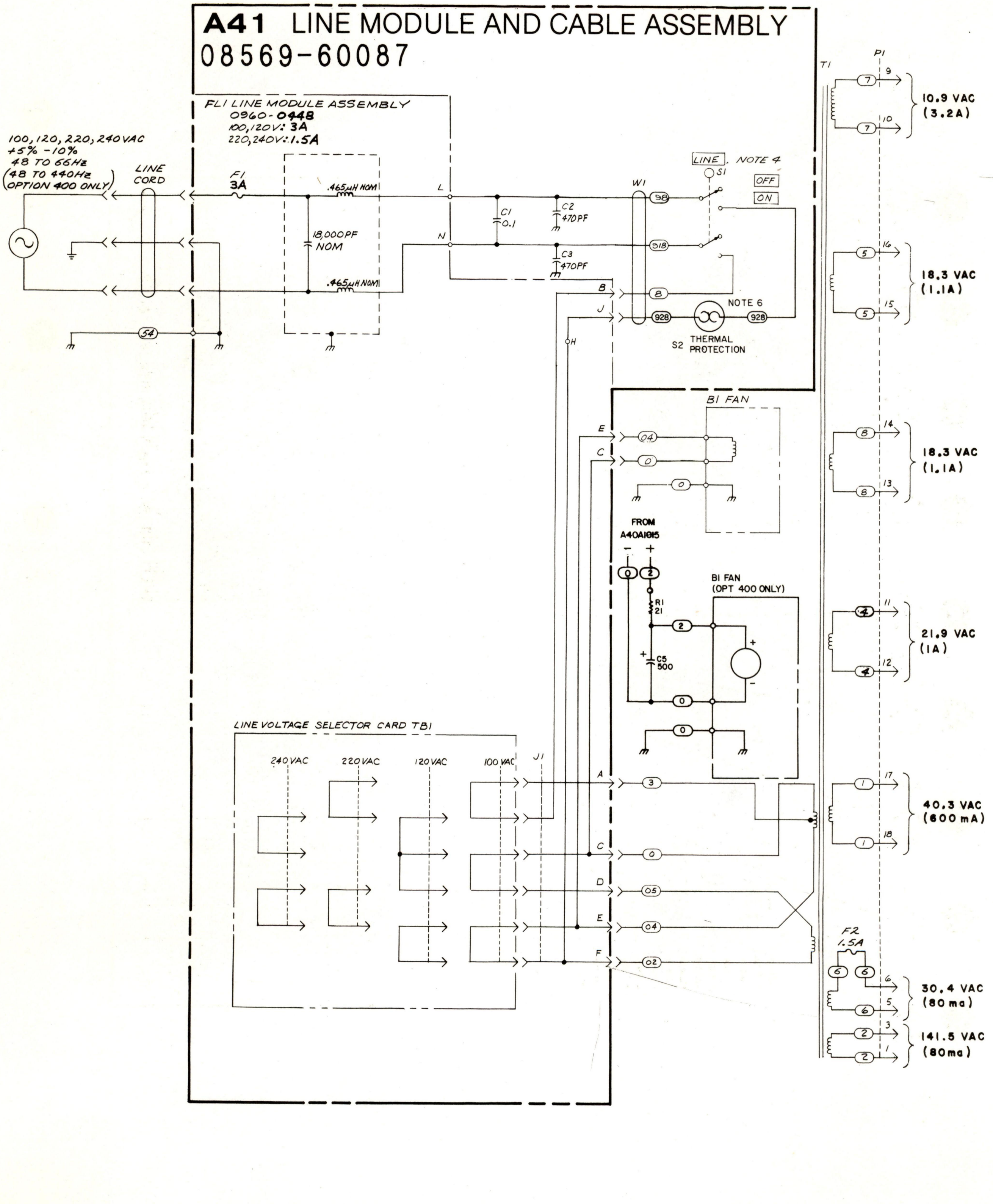

Figure 8-111. A40A1 Rectifier Assembly, A40A2 Regulator Assembly, and A41 Line Module and Cable Assembly, Schematic Diagram (1 of 2)

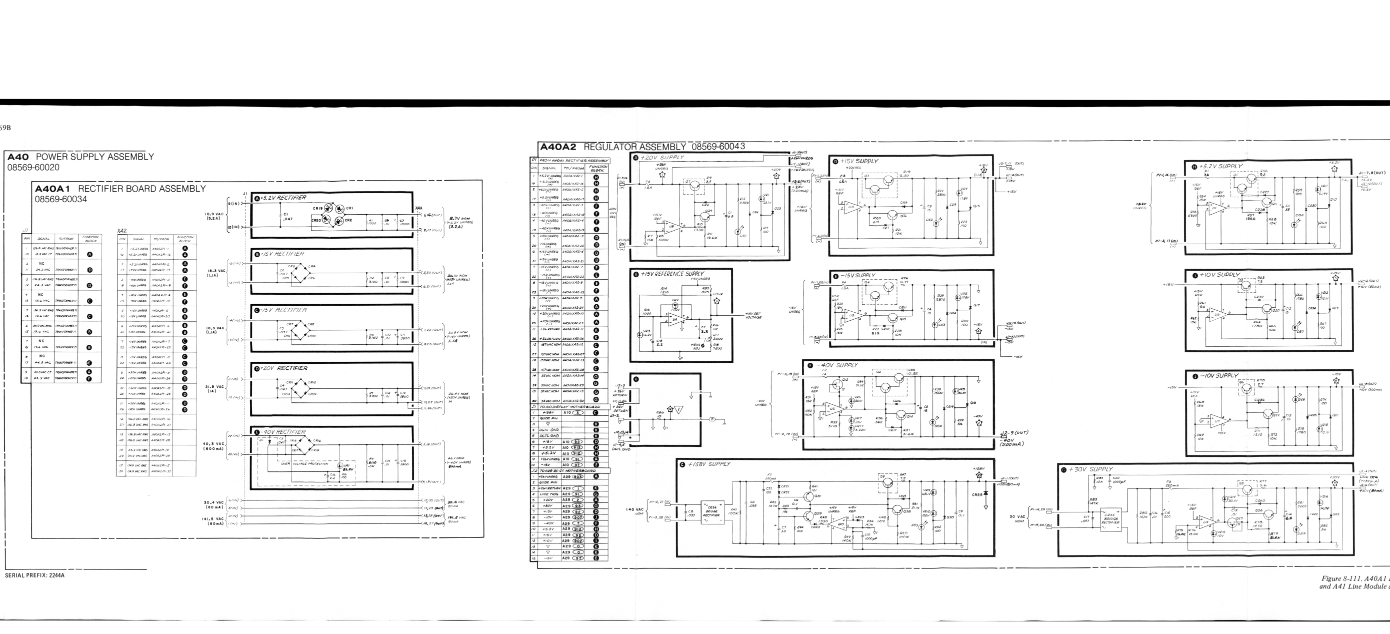

SERIAL PREFIX: 2244A

NOTES

1. REFERENCE DESIGNATORS WITHIN THIS ASSEMBLY ARE ABBREVIATED. FOR COMPLETE DESIGNATOR PREFIX WITH ASSEMBLY REFERENCE DESIGNATOR.
2. UNLESS OTHERWISE INDICATED:
   RESISTANCE IN OHMS (Ω)
   CAPACITANCE IN MICROFARADS (μF)
   INDUCTANCE IN MICROHENRIES (μH)
3. Q1 THRU Q4 ARE DARLINGTON PAIR TRANSISTORS.
4. A41S1 IS LOCATED ON A1 FRONT PANEL DISPLAY ASSEMBLY.
5. Q12 AND Q27 TOP VIEW (G, D, S)
6. A41S2 IS LOCATED ON A40A2 REGULATOR ASSEMBLY.

A40A1, A40A2

Figure 8-111. A40A1 Rectifier Assembly, A40A2 Regulator Assembly, and A41 Line Module and Cable Assembly, Schematic Diagram (2 of 2)

A42 COMB GENERATOR ASSEMBLY (OPTION 001), CIRCUIT DESCRIPTION

A42 Comb Generator Assembly consists of A42A1 Comb Generator Board mounted in a housing for required shielding. It drives U1 Step Recovery Diode Module to generate 100-MHz comb teeth.

A42A1 Comb Generator Board

The Comb Generator Board consists of four major circuits:

- Crystal Oscillator
- Driver
- Output Amplifier
- Power Supply Filter

Crystal Oscillator Ⓐ . The Crystal Oscillator uses Q1 as a common-base amplifier whose output is capacitively divided by C6 and C7 and fed back to the input through quartz crystal Y1. The oscillator frequency is thus the series-resonant frequency of the crystal. C3 OSC PEAK adjusts the resonant frequency of the output tank circuit for maximum output. C5 FREQ and factory-selected inductor L3 provide for minor adjustments in frequency.

Driver Ⓑ . The Driver amplifies the signal from the crystal oscillator to provide enough power to drive the Output Amplifier. The Driver is a conventional Class-A amplifier, with R7 through R10 setting the bias for Q2. When the Comb Generator is not being used, the OUTPUT ENABLE line is grounded, removing the bias to Q2 through CR4 and disabling the Driver. When front-panel COMB GENERATOR 100 MHz switch S3 is pressed, the OUTPUT ENABLE line is open. CR4 is then reverse-biased by R15 and no longer affects the operation of the Comb Generator.

Output Amplifier Ⓒ . The Output Amplifier amplifies the signal from the Driver to drive U2 Step Recovery Diode Module. Q3, a high-efficiency, Class-C amplifier, is turned on only during the positive half cycles of the incoming signal. CR5 and R12 serve as loads to the negative half cycles. C15 OUTPUT MATCH matches the output of Q3 to the 50-ohm input impedance of U1.

Power Supply Filter Ⓓ . The Power Supply Filter consists of simple RC filters. This circuitry filters out noise from the + 15V supply line.

U2 Step Recovery Diode Module

U2 is an integrated step recovery diode module whose input is matched to 50Ω at 100 MHz. When the Comb Generator is enabled, the output of U2 is a train of narrow, high-amplitude pulses at a repetition rate equal to the input frequency. The resulting comb spectrum consists of lines at all multiples of the input frequency up to and beyond 22 GHz.

AT9 3 dB Pad

AT9 is a 3 dB pad that helps to isolate the load from U2.

K6 RF Switch

K5 is a coaxial RF switch controlled by the COMB GENERATOR 100 MHz switch on the front panel. When the Comb Generator is enabled, K6 routes the Comb Generator output to A34 RF Attenuator Assembly through cables W40 and W41. When the Comb Generator is not enabled, K6 connects the front-panel INPUT 50Ω .01 – 22 GHz connector to A34 through cables W1 and W41.

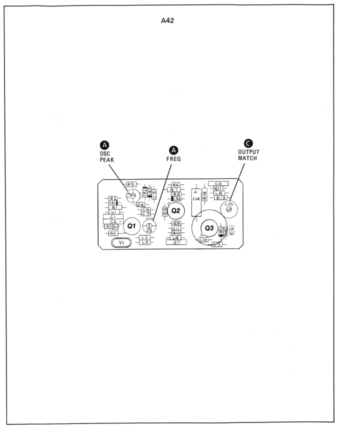

Figure 8-112. Comb Generator Assembly (Option 001), Component Locations

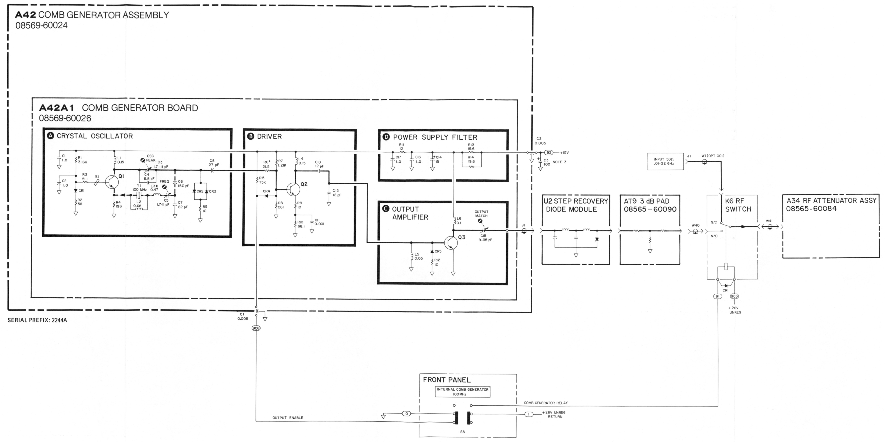

NOTES

1. REFERENCE DESIGNATORS WITHIN THIS ASSEMBLY ARE ABBREVIATED. FOR COMPLETE DESIGNATOR, PREFIX WITH ASSEMBLY REFERENCE DESIGNATOR.
2. UNLESS OTHERWISE INDICATED:
   RESISTANCE IN OHMS (Ω).
   CAPACITANCE IN MICROFARADS (μF).
   INDUCTANCE IN MICROHENRIES (μH).
3. C3, 100 μF, IS PART OF A42 COMB GENERATOR ASSEMBLY, 08569-60024.

A42

Figure 8-113. Comb Generator Assembly (Option 001), Schematic Diagram

A43 HP-IB CONNECTOR ASSEMBLY, CIRCUIT DESCRIPTION

A43 HP-IB Connector Assembly consists of the rear-panel HP-IB connector J1, HP-IB cable assembly W1, and address switch S1. The HP-IB cable assembly provides data, handshake, and control lines to the HP-IB Interface in A7 Input/Output Assembly. The address switch, connected by five lines to the HP-IB Interface, sets the address of the HP 8569B.

HEWLETT-PACKARD INTERFACE BUS

The Hewlett-Packard Interface Bus (HP-IB) is an interface that simplifies the integration of instruments, calculators, and computers. It minimizes compatibility problems between devices and has sufficient flexibility to accommodate future products. The HP-IB is an implementation of the Institute of Electrical and Electronic Engineers (IEEE) Standard 488 and conforms to the main interface document of the International Electrotechnical Commission (IEC).

The HP-IB uses a 16-line bus to interconnect up to 15 instruments. This bus is normally the only communication link between interconnected units. Each instrument on the bus is connected in parallel to the 16 lines of the bus. Eight of the lines transmit data, and the remaining eight transmit timing (handshake) and control signals.

Data is transmitted on the eight HP-IB data lines as a series of "bytes" in the American Standard Code for Information Interchange (ASCII). Normally, a seven-bit ASCII code is used, with the eighth bit available for a parity check, if desired. Data is transferred by means of an interlocked "handshake" technique. This sequence permits asynchronous communication over a wide range of data rates.

Each device on the HP-IB functions as a listener, talker, or controller. A device might function, at different times, as a listener or a talker.

A LISTENER receives data from other instruments. Examples of this type of device are: printers, display devices, programmable power supplies, and programmable signal sources.

A TALKER transmits data to other instruments. Examples of this type of device are: tape readers, voltmeters, and counters.

A CONTROLLER manages communications over the HP-IB. An example of this type of device is a computer with an appropriate Input/Output (I/O) interface.

An HP-IB system allows only one device at a time to be an active talker, and only one may be an active controller. Up to 14 devices may be listeners at the same time.

Bus Structure

The HP-IB, shown in Figure 8-114, consists of data lines, data byte transfer control lines (handshake), and general interface management lines (control).

Data Lines. The data bus consists of eight signal lines that carry data in bit parallel, byte serial format across the interface. These lines carry addresses, program data, measurement data, universal commands, and status bytes to and from devices interconnected in the system. Identification of the type of data present on the DIO signal lines is indicated by the ATN (attention) signal. When the ATN signal is true, either addresses or universal commands are present on the data bus, and all connected devices are required to monitor the DIO lines. When the ATN message is false, device-dependent data (e.g., programming data) is carried between devices previously addressed to talk and listen.

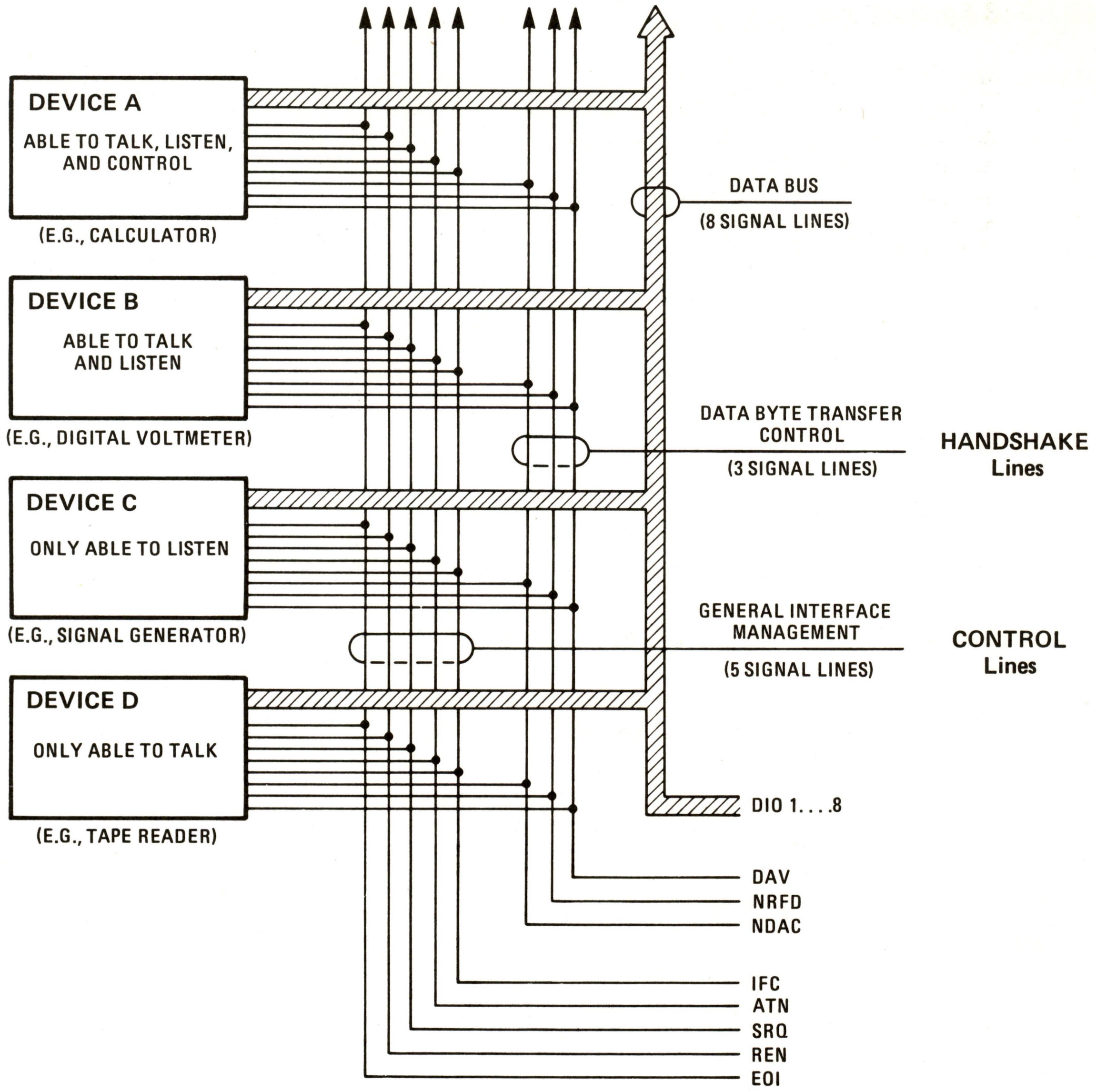

Figure 8-114. HP-IB Interface Connections and Bus Structure

Handshake Lines. Transfer of each byte on the Data Bus is accomplished via a set of three signal lines: DAV (data valid), NRFD (not ready for data), and NDAC (not data accepted). These signals operate in an interlocked handshake mode. Each of the signal lines NRFD and NDAC is connected as a logical AND (wired OR) to all devices connected to the interface. The DAV signal is sent by the talker and received by potential listeners, while NRFD and NDAC signals are sent by potential listeners and received by the talker.

Control Lines. The general interface management (control) lines manage the bus to effect an orderly flow of messages. The IFC (interface clear) message places the interface system in a known quiescent state. SRQ (service request) is used by a device to indicate the need for attention or service and to request an interruption of the current sequence of events. REN (remote enable) selects between two alternate sources of device program data. EOI (end or identify) indicates the end of a multiple-byte transfer sequence or, in conjunction with ATN, executes a polling sequence.

HP 8569B HP-IB Applications

The instrument has HP-IB capability that allows controller interaction with the information displayed on the CRT. Any or all control settings can be output upon program request, as can the values of either trace. In addition data, such as trace values, can be processed by the controller and then written with appropriate annotations into the display memory of the instrument. By means of the front-panel PLOT push buttons, and without an external controller, the instrument can transmit graticule, character, and trace data to an HP-IB plotter. SECTION III provides more complete information about HP-IB operation.

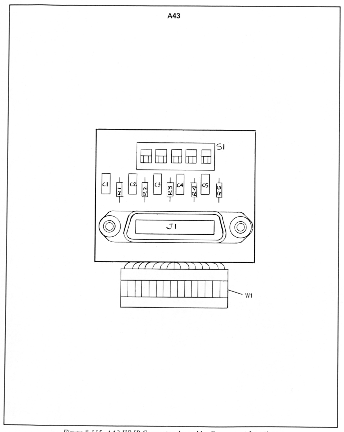

Figure 8-115. A43 HP-IB Connector Assembly, Component Locations

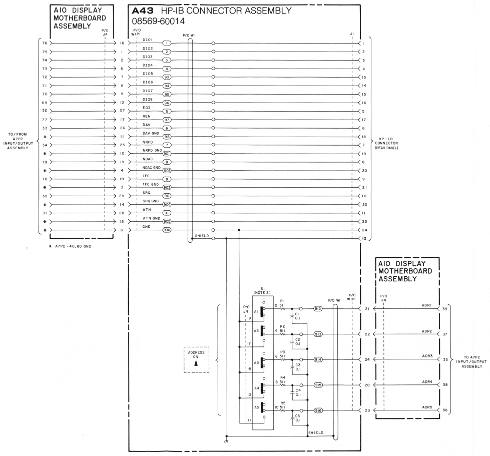

NOTES:

1. REFERENCE DESIGNATORS WITHIN THIS ASSEMBLY ARE ABBREVIATED. FOR COMPLETE REFERENCE DESIGNATOR, PREFIX WITH ASSEMBLY REFERENCE DESIGNATOR.

2. S1 ADDRESS SWITCH LOGIC:
   GND = 0 = OFF
   OPEN = 1 = ON

3. MNEMONIC TABLE:

MNEMONIC	DESCRIPTION
ADR1 THROUGH ADR5	HP-IB ADDRESS LINES
DIO1 THROUGH DIO8	HP-IB DATA LINES
EOI	LOW=END OR IDENTIFY
REN	LOW=REMOTE ENABLE
DAV	LOW=DATA VALID
NRFD	HIGH=READY FOR DATA
NDAC	HIGH=DATA ACCEPTED
IFC	LOW=INTERFACE CLEAR TRUE
SRQ	LOW=SERVICE REQUEST
ATN	LOW=ATTENTION TRUE

4. FACTORY HP-IB ADDRESS SWITCH SETTING IS 18 (A2 AND A5 ON).

5. HP-IB CABLE PINOUTS:

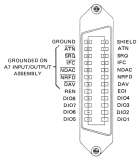

AS SEEN FROM REAR PANEL

A43

Figure 8-116, A43 HP-IB Connector Assembly, Schematic Diagram

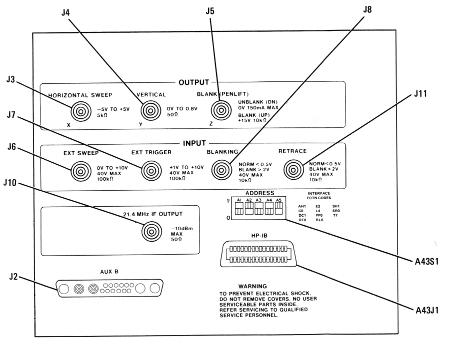

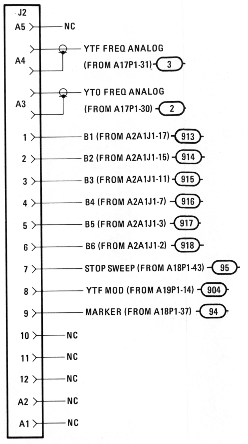

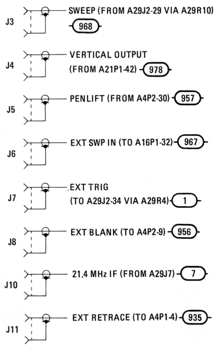

A43S1 – SEE A43 SCHEMATIC
A43J1 – SEE A43 SCHEMATIC

AUX B

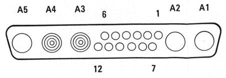

Figure 8-117. Rear Panel Connections

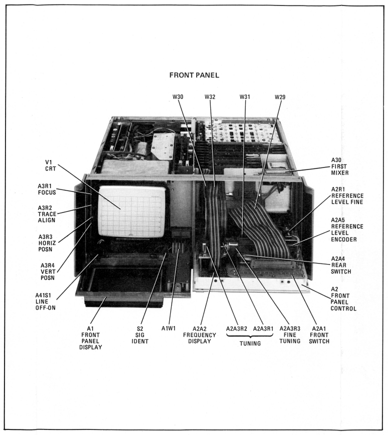

Figure 8-118. HP Model 8569B Major Assembly and Component Locations, Front Panel

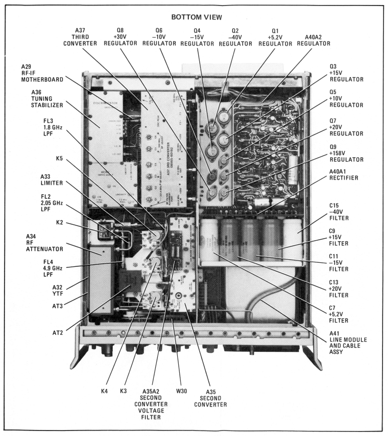

Figure 8-119. HP Model 8569B Major Assembly and Component Locations, Bottom View

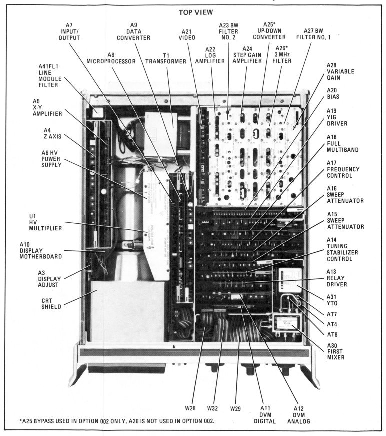

Figure 8-120. HP Model 8569B Major Assembly and Component Locations, Top View

HEWLETT PACKARD

HEWLETT-PACKARD SALES AND SERVICE OFFICES

To obtain servicing information or to order replacement parts, contact the nearest Hewlett-Packard Sales and Service Office listed in the HP Catalog, or contact the nearest regional office listed below:

IN THE UNITED STATES

CALIFORNIA
3939 Lankershim Boulevard
North Hollywood 91604

GEORGIA
P.O. Box 105005
2000 South Park Place
Atlanta 30339

ILLINOIS
5201 Tollview Drive
Rolling Meadows 60008

NEW JERSEY
W. 120 Century Road
Paramus 07652

IN CANADA

Hewlett-Packard (Canada) Ltd.
17500 South Service Road
Trans-Canada Highway
Kirkland, Quebec H9J 2M5

IN FRANCE

Hewlett-Packard France
F-91947 Les Ulis Cedex
Orsay

IN GERMAN FEDERAL REPUBLIC

Hewlett-Packard GmbH
Vertriebszentrale Frankfurt
Berner Strasse 117
Postfach 560 140
D-6000 Frankfurt 56

IN GREAT BRITAIN

Hewlett-Packard Ltd.
King Street Lane
Winnersh, Wokingham
Berkshire RG11 5AR

IN OTHER EUROPEAN COUNTRIES

SWITZERLAND
Hewlett-Packard (Schweiz) AG
29 Chemin Chateau Bloc
CH-1219 LeLignon-Geneva

IN ALL OTHER LOCATIONS

Hewlett-Packard Inter-Americas
3200 Hillview Avenue
Palo Alto, California 94304

HEWLETT PACKARD

HP Part No. 08569-90032

Printed in USA